TM 9-2320-209-34-2-2
T.O. 36A12-1B-1092-2-2

TECHNICAL MANUAL

VOLUME 2 OF 2

PART 2 OF 3

Chapter 17
Body, Cab,
Hood, and Hull

MAINTENANCE

DIRECT SUPPORT AND GENERAL SUPPORT LEVEL

(MULTIFUEL)

TRUCK, CARGO: M35A1, M35A2, M35A2C, M36A2; TRUCK, TANK, FUEL: M49A1C, M49A2C; TRUCK, TANK, WATER: M50A1, M50A2, M50A3; TRUCK, VAN, SHOP: M109A2, M109A3; TRUCK, REPAIR SHOP: M185A2, M185A3; TRUCK, TRACTOR: M275A1, M275A2; TRUCK, DUMP: M342A2; TRUCK, MAINTENANCE, PIPELINE CONSTRUCTION: M756A2; TRUCK, MAINTENANCE, EARTH BORING AND POLESETTING: M764

NOTE:

THE STYLE OF THIS TM IS EXPERIMENTAL. IT IS BEING TRIED BY THE ARMY ONLY ON A LIMITED BASIS

DEPARTMENTS OF THE ARMY AND THE AIR FORCE
MAY 1981

WARNING

EXHAUST GASES CAN BE DEADLY

Exposure to exhaust gases produces symptoms of headache, dizziness, loss of muscular control, apparent drowsiness, and coma. Permanent brain damage or death can result from severe exposure.

Carbon monoxide occurs in the exhaust fumes of fuel burning heaters and internal combustion engines, and becomes dangerously concentrated under conditions of inadequate ventilation. The following precautions must be observed to insure the safety of personnel whenever fuel burning heater(s) or engine of any vehicle is operated for maintenance purposes or tactical use.

Do not operate heater or engine of vehicle in an enclosed area unless it is adequately ventilated.

Do not idle engine for long periods without maintaining adequate ventilation in personnel compartments.

Do not drive any vehicle with inspection plates or cover plates removed unless necessary for maintenance purposes.

Be alert at all times during vehicle operation for exhaust odors and exposure symptoms. If either are present, immediately ventilate personnel compartments. If symptoms persist, remove affected personnel from vehicle and treat as follows: expose to fresh air; keep warm; do not permit physical exercise; if necessary, administer artificial respiration.

If exposed, seek prompt medical attention for possible delayed onset of acute lung congestion. Administer oxygen if available,

The best defense against exhaust gas poisoning is adequate ventilation.

WARNING

SERIOUS OR FATAL INJURY TO PERSONNEL MAY RESULT IF THE FOLLOWING INSTRUCTIONS ARE NOT COMPLIED WITH.

Dry cleaning solvent is flammable. Do not use near an open flame. Keep a fire extinguisher nearby when solvent is used. Use only in well-ventilated places. Failure to do this may result in injury to personnel and damage to equipment.

Eye shields must be worn when using compressed air. Eye injury can occur if eye shields are not used.

Always wear leather gloves when handling glass. Broken or sharp edges can cause serious injury to personnel.

Rubber cement is flammable. Do not use near an open flame. Keep a fire extinguisher nearby when rubber cement is used. Use only in well-ventilated places. Failure to do this may result in injury to personnel and damage to equipment.

Smoking, sparks or open flame are not allowed within 50 feet of fuel truck when working on fuel tank truck. Make sure that fuel tank truck is statically grounded before starting to work and during all operations. Fuel and fuel fumes can catch fire and explode, causing injury to personnel and damage to equipment.

WARNING - Cont

Always wear protective gloves when handling fuel discharge valve cable. Do not let cable slip through hands. Rusty or broken wires can cause injury to personnel.

Water tank body is heavy and bulky. Make sure that there is enough clearance around and over truck before lifting unit. This will stop damage to equipment and injury to personnel.

Be very careful at all times when removing and replacing van body. Check lifting shackles for safety, and make sure lifting sling hooks are fully held in lifting shackles. Keep personnel clear of the underside of body as it is being hoisted and lowered. Use enough support blocking to keep body level and safe.

Before taking off horizontal leveling worm gear housing, put supports under intermediate case to stop intermediate case from turning. If case turns, fixtures which stick out could injure personnel or damage equipment.

Be sure that derrick tube is in cradle and that rack carrier nut is braced to keep boring case from turning when worm gear housing is taken off. This will avoid injury to personnel and damage to equipment.

Outrigger leg assembly is very heavy and must be properly supported and balanced on floor jack before taking out mounting screws. If care is not taken, assembly can fall and injure personnel and damage equipment.

Never work under dump body unless safety braces are properly positioned. If these steps are not taken, personnel can be seriously injured.

Do not heat derrick tube when straightening it. This could make it weak. When setting poles, a weak tube would be dangerous to personnel and equipment.

Derrick assembly is heavy. Hold it up firmly when taking if off from over rack bar. It can fall and cause damage to equipment and injury to personnel.

*TM 9-2320-209-34-2-2
T.O. 36A12-1B-1092-2-2

TECHNICAL MANUAL
NO. 9-2320-209-34-2-2
TECHNICAL ORDER
NO. 36A12-1B-1092-2-2

DEPARTMENTS OF THE ARMY
AND
THE AIR FORCE
Washington, DC, 20 May 1981

TECHNICAL MANUAL

VOLUME 2 OF 2

PART 2 OF 3

MAINTENANCE

DIRECT SUPPORT AND GENERAL SUPPORT LEVEL

21/2-TON, 6X6, M44A1 AND M44A2 SERIES TRUCKS

(MULTIFUEL)

Model		NSN without Winch	NSN with Winch
Truck, Cargo	M35A1	2320-00-542-5633	2320-00-542-5634
	M35A2	2320-00-077-1616	2320-00-077-1617
	M35A2C	2320-00-926-0873	2320-00-926-0875
	M36A2	2320-00-077-1618	2320-00-077-1619
Truck, Tank, Fuel	M49A1C	2320-00-440-3349	2320-00-440-3346
	M49A2C	2320-00-077-1631	2320-00-077-1632
Truck, Tank, Water	M50A1	2320-00-440-8307	2320-00-440-8305
	M50A2	2320-00-077-1633	2320-00-077-1634
	M50A3	2320-00-937-4036	2320-00-937-5264
Truck, Van, Shop	M109A2	2320-00-440-8313	2320-00-440-8308
	M109A3	2320-00-077-1636	2320-00-077-1637
Truck, Repair Shop	M185A2	4940-00-987-8799	4940-00-987-8800
	M185A3	4940-00-077-1638	4940-00-077-1639
Truck, Tractor	M275A1	2320-00-446-2479	
	M275A2	2320-00-077-1640	2320-00-077-1641
Truck, Dump	M342A2	2320-00-077-1643	2320-00-077-1644
Truck, Maintenance, Pipeline Construction	M756A2		2320-00-904-3277
Truck, Maintenance, Earth Boring and Polesetting	M764		2320-00-937-5980

*This manual, together with TM 9-2320-209-34-1, 20 May 1981; TM 9-2320-209-34-2-1, 20 May 1981; and TM 9-2320-209-34-2-3, 20 May 1981, supersedes TM 9-2320-209-34, 30 March 1979.

REPORTING OF ERRORS AND RECOMMENDING IMPROVEMENTS

You can help improve this manual. If you find any mistakes or if you know of a way to improve the procedure, please let us know. Mail your letter, DA Form 2028 (Recommended Changes to Publications and Blank Forms), or DA Form 2028-2 located in the back of this manual direct to: Commander, US Army Tank-Automotive Command, ATTN: DRSTA-MB, Warren, Michigan 48090. A reply will be furnished to you.

TABLE OF CONTENTS

	Paragraph	Page
CHAPTER 17. BODY, CAB, HOOD, AND HULL GROUP MAINTENANCE		
Section I. Scope		17-1
Equipment Items Covered	17-1	17-1
Equipment Items Not Covered	17-2	17-1
Section II. Hood and Cab Components		17-1
Hood Side Panels Removal, Repair, and Replacement	17-3	17-1
Preliminary Procedures	17-3a	17-1
Removal	17-3b	17-2
Disassembly	17-3c	17-3
Cleaning	17-3d	17-4
Inspection and Repair	17-3e	17-4
Assembly	17-3f	17-5
Replacement	17-3g	17-6
Hood Assembly Removal, Repair, and Replacement	17-4	17-7
Preliminary Procedure	17-4a	17-7
Removal	17-4b	17-7
Disassembly	17-4c	17-8
Cleaning	17-4d	17-10
Inspection	17-4e	17-10
Repair	17-4f	17-10
Assembly	17-4g	17-11
Replacement	17-4h	17-13
Cab Removal, Repair, and Replacement	17-5	17-14
Preliminary Procedures	17-5a	17-14
Removal	17-5b	17-15
Disassembly	17-5c	17-18
Cleaning	17-5d	17-30
Inspection and Repair	17-5e	17-30
Assembly	17-5f	17-33
Replacement	17-5g	17-47
Cab Door Removal, Repair, and Replacement	17-6	17-52
Removal	17-6a	17-52
Disassembly	17-6b	17-53
Cleaning	17-6c	17-65

TABLE OF CONTENTS-CONT

	Paragraph	Page
Inspection	17-6d	17-65
Repair	17-6e	17-67
Assembly	17-6f	17-67
Replacement	17-6g	17-78
Section III. Fenders, Running Boards, and Windshield Assembly		17-79
Front Fender Removal, Repair, and Replacement	17-7	17-79
Preliminary Procedures	17-7a	17-79
Removal	17-7b	17-80
Disassembly	17-7c	17-87
Cleaning	17-7d	17-88
Inspection and Repair	17-7e	17-88
Assembly	17-7f	17-88
Replacement	17-7g	17-89
Rear Fender Removal, Repair, and Replacement (Trucks M275A1 and M275A2)	17-8	17-97
Removal	17-8a	17-97
Cleaning	17-8b	17-99
Inspection and Repair	17-8c	17-99
Replacement	17-8d	17-100
Right Running Board and Battery Box Removal, Repair, and Replacement	17-9	17-102
Preliminary Procedure	17-9a	17-102
Removal	17-9b	17-102
Cleaning	17-9c	17-108
Inspection and Repair	17-9d	17-108
Replacement	17-9e	17-109
Left Running Board, Gasoline Drum Bracket, and Tool Box Repair (All Trucks Except M275A1 and M275A2)	17-10	17-115
Preliminary Procedure	17-10a	17-115
Disassembly	17-10b	17-115
Cleaning	17-10c	17-116
Inspection	17-10d	17-116
Repair	17-10e	17-116
Assembly	17-l0f	17-116
Vehicular Flat Windshield Assembly Repair	17-11	17-117
Preliminary Procedure	17-lla	17-117
Disassembly	17-llb	17-117
Cleaning	17-llc	17-119
Inspection and Repair	17-lld	17-119
Assembly	17-lle	17-120
Section IV. Seats		17-122
Floating Driver's Seat Assembly Repair	17-12	17-122
Preliminary Procedure	17-12a	17-122
Disassembly	17-12b	17-122

TABLE OF CONTENTS-CONT

		Paragraph	Page
	Inspection	17-12c	17-126
	Repair	17-12d	17-127
	Assembly	17-12e	17-127
	Driver's Seat (Early Model) Repair	17-13	17-131
	Preliminary Procedure	17-13a	17-131
	Disassembly	17-13b	17-131
	Cleaning	17-13c	17-132
	Inspection and Repair	17-13d	17-132
	Assembly	17-13e	17-133
	Companion Seat (Early Model) Repair	17-14	17-134
	Preliminary Procedures	17-14a	17-134
	Disassembly	17-14b	17-134
	Cleaning	17-14c	17-136
	Inspection and Repair	17-14d	17-136
	Assembly	17-14e	17-137
	Companion Seat (Late Models) Repair	17-15	17-139
	Preliminary Procedures	17-15a	17-139
	Disassembly	17-15b	17-140
	Cleaning	17-15c	17-143
	Inspection and Repair	17-15d	17-143
	Assembly	17-15e	17-144
Section V.	Cargo Body Components		17-147
	Cargo Body Removal, Repair, and Replacement (Trucks M35A1, M35A2, and M36A2)	17-16	17-147
	Preliminary Procedures	17-16a	17-147
	Removal	17-16b	17-148
	Cleaning	17-16c	17-151
	Inspection and Repair	17-16d	17-151
	Replacement	17-16e	17-152
	Cargo Body Tailgate Repair (Truck M35A1)	17-17	17-156
	Preliminary Procedure	17-17a	17-156
	Disassembly	17-17b	17-156
	Cleaning	17-17c	17-157
	Inspection and Repair	17-17d	17-157
	Assembly	17-17e	17-158
	Cargo Body Tailgate Repair (Truck M35A2C)	17-18	17-159
	Preliminary Procedure	17-18a	17-159
	Disassembly	17-18b	17-160
	Cleaning	17-18c	17-162
	Inspection and Repair	17-18d	17-162
	Assembly	17-18e	17-163
Section VI.	Tank Body Components		17-165
	Pump Compartment Door Removal, Repair, and Replacement (Trucks M49A1C and M49A2C)	17-19	17-165
	Removal	17-19a	17-165
	Disassembly	17-19b	17-166

TABLE OF CONTENTS-CONT

	Paragraph	Page
Cleaning	17-19c	17-170
Inspection and Repair	17-19d	17-170
Assembly	17-19e	17-171
Replacement	17-19f	17-174
Hose Compartment Door Removal, Repair, and Replacement (Trucks M49A1C and M49A2C)	17-20	17-175
Removal	17-20a	17-175
Disassembly	17-20b	17-176
Cleaning	17-20c	17-177
Inspection and Repair	17-20d	17-177
Assembly	17-20e	17-178
Replacement	17-20f	17-179
Tank Body Door Holder Removal, Repair, Replacement, and Adjustment	17-21	17-180
Removal	17-21a	17-180
Disassembly	17-21b	17-181
Cleaning	17-21c	17-183
Inspection and Repair	17-21d	17-183
Assembly	17-21e	17-184
Replacement	17-21f	17-186
Water Adjustment	17-21g	17-187
Water Segregator Removal and Replacement (Truck M49A2C)	17-22	17-188
Preliminary Procedure	17-22a	17-188
Removal	17-22b	17-188
Replacement	17-22c	17-193
Water Segregator Filter Removal, Repair, and Replacement (Truck M49A2C)	17-23	17-197
Preliminary Procedure	17-23a	17-197
Removal	17-23b	17-197
Disassembly	17-23c	17-202
Cleaning	17-23d	17-202
Inspection and Repair	17-23e	17-202
Assembly	17-23f	17-202
Replacement	17-23g	17-202
Fuel Tank Discharge Valve Control Repair and Test	17-24	17-206
Preliminary Procedures	17-24a	17-206
Disassembly	17-24b	17-206
Cleaning	17-24c	17-211
Inspection and Repair	17-24d	17-211
Assembly	17-24e	17-213
Test	17-24f	17-218
Discharge Valve With Screen Repair	17-25	17-222
Preliminary Procedure	17-25a	17-222
Disassembly	17-25b	17-222
Cleaning	17-25c	17-224
Inspection	17-25d	17-224

TABLE OF CONTENTS-CONT

	Paragraph	Page
Repair	17-25e	17-226
Assembly	17-25f	17-228
Centrifugal Pump Repair (Trucks M49A1C, M49A2C, M50A1, M50A2, and M50A3)	17-26	17-230
Preliminary Procedure	17-26a	17-230
Disassembly	17-26b	17-230
Cleaning	17-26c	17-234
Inspection	17-26d	17-235
Repair	17-26e	17-240
Assembly	17-26f	17-242
Test and Adjustment	17-26g	17-250
Fuel Tank Body Removal, Repair, and Replacement (Truck M49A1C)	17-27	17-257
Preliminary Procedures	17-27a	17-257
Removal	17-27b	17-258
Cleaning	17-27c	17-276
Inspection and Repair	17-27d	17-276
Replacement	17-27e	17-276
Fuel Tank Body Removal, Repair, and Replacement (Truck M49A2C)	17-28	17-290
Preliminary Procedures	17-28a	17-290
Removal	17-28b	17-291
Cleaning	17-28c	17-312
Inspection and Repair	17-28d	17-312
Replacement	17-28e	17-312
Gravity Delivery Line Gate Valve Removal, Repair, and Replacement	17-29	17-327
Preliminary Procedure	17-29a	17-327
Removal	17-29b	17-328
Disassembly	17-29c	17-330
Cleaning	17-29d	17-333
Inspection and Repair	17-29e	17-333
Assembly	17-29f	17-334
Replacement	17-29g	17-337
Water Tank Bodies Removal, Repair, and Replacement (Trucks M50A1, M50A2, and M50A3)	17-30	17-339
Preliminary Procedures	17-30a	17-339
Removal	17-30b	17-340
Disassembly	17-30C	17-342
Cleaning	17-30d	17-349
Inspection and Repair	17-30e	17-350
Assembly	17-30f	17-352
Replacement	17-30g	17-357
Pump Compartment Door Removal, Repair, and Replacement (Trucks M50Al, M50A2, and M50A3)	17-31	17-360
Removal	17-31a	17-360
Disassembly	17-31b	17-361

TABLE OF CONTENTS-CONT

		Paragraph	Page
	Cleaning	17-31c	17-365
	Inspection and Repair	17-31d	17-365
	Assembly	17-31e	17-366
	Replacement	17-31f	17-369
	Water Tank Nozzle Assembly Repair	17-32	17-370
	Preliminary Procedure	17-32a	17-370
	Disassembly	17-32b	17-370
	Cleaning	17-32c	17-372
	Inspection and Repair	17-32d	17-372
	Assembly	17-32e	17-373
	Water Discharge Pipe Repair (Trucks M50A2 and M50A3)	17-33	17-375
	Preliminary Procedure	17-33a	17-375
	Cleaning, Inspection, and Repair	17-33b	17-375
Section VII.	Special Purpose Body Components		17-376
	Communication Door Assembly Removal, Repair, and Replacement (Trucks M109A2, M109A3, M185A2, and M185A3)	17-34	17-376
	Removal	17-34a	17-377
	Disassembly	17-34b	17-378
	Cleaning	17-34c	17-379
	Inspection and Repair	17-34d	17-380
	Assembly	17-34e	17-381
	Replacement	17-34f	17-382
	Dome Light (115 Volt) Repair	17-35	17-383
	Preliminary Procedure	17-35a	17-383
	Disassembly	17-35b	17-383
	Cleaning	17-35c	17-384
	Inspection and Repair	17-35d	17-385
	Assembly	17-35e	17-386
	Circuit Breaker Box Assembly Removal, Repair, and Replacement	17-36	17-387
	Preliminary Procedure	17-36a	17-387
	Removal	17-36b	17-388
	Cleaning	17-36c	17-390
	Inspection and Repair	17-36d	17-390
	Replacement	17-36e	17-391
	Converter Removal and Replacement (Trucks M109A2 and M109A3)	17-37	17-393
	Removal	17-37a	17-393
	Replacement	17-37b	17-395
	Rear Door Hinges Removal and Replacement (Trucks M109A2 and M109A3)	17-38	17-397
	Preliminary Procedures	17-38a	17-397
	Removal	17-38b	17-397
	Replacement	17-38c	17-399

TABLE OF CONTENTS-CONT

	Paragraph	Page
Front Sash Assembly Removal, Repair, and Replacement (Trucks M109A2, M109A3, M185A2, and M185A3)	17-39	17-401
Preliminary Procedure	17-39a	17-401
Removal	17-39b	17-402
Disassembly	17-39c	17-403
Cleaning	17-39d	17-404
Inspection and Repair	17-39e	17-405
Assembly	17-39f	17-407
Replacement	17-39g	17-408
Side Sash With Panel and Window Assembly Removal, Repair, and Replacement (Trucks M185A2, M185A3, M109A2, and M109A3)	17-40	17-409
Removal	17-40a	17-409
Disassembly	17-40b	17-412
Cleaning	17-40c	17-413
Inspection and Repair	17-40d	17-413
Assembly	17-40e	17-414
Replacement	17-40f	17-415
Lifting Shackle Removal, Repair, and Replacement (Trucks M109A2, M109A3, M185A2, and M185A3)	17-41	17-418
Preliminary Procedures	17-41a	17-418
Left Front Lifting Shackle	17-41b	17-419
Right Front Lifting Shackle	17-41C	17-425
Right Rear Lifting Shackle	17-41d	17-429
Left Rear Lifting Shackle	17-41e	17-439
Folding Step Removal, Repair, and Replacement	17-42	17-451
Preliminary Procedure	17-42a	17-451
Removal	17-42b	17-452
Cleaning	17-42c	17-455
Inspection and Repair	17-42d	17-455
Replacement	17-42e	17-456
Van Body Removal, Repair, and Replacement	17-43	17-459
Preliminary Procedures	17-43a	17-459
Removal	17-43b	17-460
Disassembly	17-43c	17-464
Cleaning	17-43d	17-465
Inspection and Repair	17-43e	17-465
Assembly	17-43f	17-466
Replacement	17-43g	17-467
Earth Boring Machine Operator's Seat Removal, Repair, and Replacement (Truck M764)	17-44	17-472
Removal	17-44a	17-472
Disassembly	17-44b	17-473

TABLE OF CONTENTS-CONT

	Paragraph	Page
Cleaning	17-44c	17-475
Inspection and Repair	17-44d	17-475
Assembly	17-44e	17-476
Replacement	17-44f	17-478
Earth Boring Machine Assembly Removal and Replacement	17-45	17-479
Preliminary Procedures	17-45a	17-479
Removal	17-45b	17-479
Replacement	17-45c	17-482
Boring Case and Gears Removal, Repair, and Replacement (Truck M764)	17-46	17-485
Preliminary Procedure	17-46a	17-485
Removal	17-46b	17-486
Disassembly	17-46c	17-493
Cleaning	17-46d	17-501
Inspection	17-46e	17-501
Repair	17-46f	17-504
Assembly	17-46g	17-504
Replacement	17-46h	17-514
Intermediate Case and Gear Assembly Removal, Repair, Replacement, and Adjustment (Truck M764)	17-47	17-530
Preliminary Procedures	17-47a	17-530
Removal	17-47b	17-531
Disassembly	17-47c	17-533
Cleaning	17-47d	17-540
Inspection	17-47e	17-540
Repair	17-47f	17-541
Assembly	17-47g	17-541
Replacement	17-47h	17-547
Adjustment	17-47i	17-550
Main Drive Idler Gear Assembly Removal, Repair, and Replacement (Truck M764)	17-48	17-568
Preliminary Procedures	17-48a	17-568
Removal	17-48b	17-569
Disassembly	17-48c	17-570
Cleaning	17-48d	17-576
Inspection and Repair	17-48e	17-576
Assembly	17-48f	17-579
Replacement	17-48g	17-585
Horizontal Leveling Worm Gear and Housing Assembly Removal, Repair, and Replacement (Truck M764)	17-49	17-586
Preliminary Procedure	17-49a	17-586
Removal	17-49b	17-587
Disassembly	17-49c	17-590
Cleaning	17-49d	17-594
Inspection	17-49e	17-594
Repair	17-49f	17-597

TABLE OF CONTENTS-CONT

	Paragraph	Page
Assembly	17-49g	17-597
Replacement	17-49h	17-604
Vertical Leveling Worm Gear and Housing Removal, Repair, Replacement and Adjustment (Truck M764)	17-50	17-609
Preliminary Procedure	17-50a	17-609
Removal	17-50b	17-610
Disassembly	17-50c	17-613
Cleaning	17-50d	17-617
Inspection and Repair	17-50e	17-617
Assembly	17-50f	17-622
Adjustment	17-50g	17-627
Replacement	17-50h	17-628
Operation Lever Assembly Removal, Repair, and Replacement (Truck M764)	17-51	17-631
Removal	17-51a	17-631
Disassembly	17-51b	17-634
Cleaning	17-51c	17-636
Inspection and Repair	17-51d	17-636
Assembly	17-51e	17-637
Replacement	17-51f	17-639
Feed and Drive Clutch and Brake Assemblies and Clutch Shaft Pinions Removal, Repair, and Replacement (Truck M764)	17-52	17-642
Preliminary Procedures	17-52a	17-642
Disassembly	17-52b	17-643
Cleaning	17-52c	17-657
Inspection and Repair	17-52d	17-657
Assembly	17-52e	17-659
Power Leveler Removal, Repair, and Replacement (Truck M764)	17-53	17-672
Preliminary Procedures	17-53a	17-672
Removal	17-53b	17-672
Disassembly	17-53c	17-675
Cleaning	17-53d	17-679
Inspection and Repair	17-53e	17-679
Assembly	17-53f	17-681
Replacement	17-53g	17-685
Outrigger Legs Removal, Repair, and Replacement (Truck M764)	17-54	17-688
Preliminary Procedures	17-54a	17-688
Removal	17-54b	17-688
Disassembly	17-54c	17-690
Cleaning	17-54d	17-692
Inspection and Repair	17-54e	17-692
Assembly	17-54f	17-693
Replacement	17-54g	17-695

TABLE OF CONTENTS-CONT

	Paragraph	Page
Outrigger Leg Hydraulic Cylinder Removal, Repair, Replacement, and Test (Truck M764)	17-55	17-697
Preliminary Procedure	17-55a	17-697
Removal	17-55b	17-698
Disassembly	17-55c	17-699
Cleaning	17-55d	17-702
Inspection and Repair	17-55e	17-702
Assembly	17-55f	17-703
Replacement	17-55g	17-706
Test	17-55h	17-707
Integral Derrick and Snatch Sheave Assembly Removal, Repair, and Replacement	17-56	17-708
Preliminary Procedure	17-56a	17-708
Removal	17-56b	17-709
Cleaning	17-56c	17-712
Inspection and Repair	17-56d	17-712
Replacement	17-56e	17-713
Derrick Sheave Assembly Repair (Truck M764)	17-57	17-715
Preliminary Procedure	17-57a	17-715
Disassembly	17-57b	17-716
Cleaning	17-57c	17-718
Inspection and Repair	17-57d	17-718
Assembly	17-57e	17-721
Snatch Sheave Assembly Repair (Truck M764)	17-58	17-724
Preliminary Procedure	17-58a	17-724
Disassembly	17-58b	17-725
Cleaning	17-58c	17-727
Inspection and Repair	17-58d	17-728
Assembly	17-58e	17-729
Pioneer Tool Bracket Removal, Repair, and Replacement	17-59	17-731
Preliminary Procedure	17-59a	17-731
Removal	17-59b	17-731
Disassembly	17-59c	17-732
Cleaning	17-59d	17-733
Inspection and Repair	17-59e	17-733
Assembly	17-59f	17-733
Replacement	17-59g	17-734
Cargo Body Removal, Repair, and Replacement (Truck M764)	17-60	17-735
Preliminary Procedures	17-60a	17-735
Removal	17-60b	17-736
Cleaning	17-60c	17-738
Inspection and Repair	17-60d	17-738
Replacement	17-60e	17-739

TABLE OF CONTENTS-CONT

	Paragraph	Page
Cab Protector Removal, Repair, and Replacement (Truck M756A2)	17-61	17-742
Preliminary Procedure	17-61a	17-742
Removal	17-61b	17-742
Cleaning	17-61c	17-744
Inspection and Repair	17-61d	17-744
Replacement	17-61e	17-745
Floor Boards Removal, Repair, and Replacement (Truck M756A2)	17-62	17-747
Preliminary Procedures	17-62a	17-747
Removal	17-62b	17-748
Cleaning	17-62c	17-749
Inspection and Repair	17-62d	17-749
Replacement	17-62e	17-750
Step Plate and Tool Box Repair (Truck M756A2)	17-63	17-751
Preliminary Procedure	17-63a	17-751
Disassembly	17-63b	17-751
Cleaning	17-63c	17-752
Inspection and Repair	17-63d	17-752
Assembly	17-63e	17-753
Pipeline Construction Truck Body Removal, Repair, and Replacement (Truck M756A2)	17-64	17-754
Preliminary Procedures	17-64a	17-754
Removal	17-64b	17-755
Cleaning	17-64c	17-758
Inspection and Repair	17-64d	17-758
Replacement	17-64e	17-759
Dump Truck Subframe Removal and Replacement	17-65	17-763
Preliminary Procedures	17-65a	17-763
Removal	17-65b	17-763
Replacement	17-65c	17-768
Dump Body Tailgate Assembly Removal, Repair, and Replacement	17-66	17-773
Preliminary Procedure	17-66a	17-773
Removal	17-66b	17-773
Disassembly	17-66c	17-774
Cleaning	17-66d	17-775
Inspection and Repair	17-66e	17-775
Assembly	17-66f	17-776
Replacement	17-66g	17-777
End Gate Control Linkage Removal, Repair, and Replacement (Truck M342A2)	17-67	17-778
Preliminary Procedure	17-67a	17-778
Removal	17-67b	17-778
Cleaning and Inspection	17-67c	17-785
Repair	17-67d	17-789
Replacement	17-67e	17-789

TABLE OF CONTENTS-CONT

	Paragraph	Page
Dump Truck Body Removal, Repair, and Replacement	17-68	17-799
Preliminary Procedures	17-68a	17-799
Removal	17-68b	17-800
Disassembly	17-68c	17-803
Cleaning	17-68d	17-813
Inspection and Repair	17-68e	17-814
Assembly	17-68f	17-817
Replacement	17-68g	17-828
Tailgate Linkage Adjustment	17-68h	17-831
Splash Shield Removal, Repair, and Replacement	17-69	17-832
Removal	17-69a	17-832
Cleaning	17-69b	17-851
Inspection and Repair	17-69c	17-851
Replacement	17-69d	17-852

LIST OF TABLES

Number		Page
17-1	Rotor Shaft and Vane Wear Limits	17-238
17-2	Vane and Liner Wear Limits and Fit	17-239
17-3	Boring Case Gear Assembly Wear Limits	17-503
17-4	Adjusting Bearing, Worm Gear Shaft, and Thrust Washer Wear Limits	17-596
17-5	Leveling Worm Gear Assemblies Wear Limits	17-617
17-6	Power Leveler Assembly Wear Limits	17-618
17-7	Feed and Drive Clutch Assembly Wear Limits	17-658
17-8	Power Leveler Wear Limits	17-680

CHAPTER 17

BODY, CAB, AND HOOD GROUP MAINTENANCE

Section I. SCOPE

17-1. EQUIPMENT ITEMS COVERED. This chapter gives equipment maintenance procedures for hood and cab components, fenders, running boards, and body components and special purpose body components for which there are authorized corrective maintenance tasks at the direct and general support maintenance levels.

17-2. EQUIPMENT ITEMS NOT COVERED. All equipment items for which corrective maintenance is authorized at the direct and general support maintenance levels are covered in this chapter.

Section II. HOOD AND CAB COMPONENTS

17-3. HOOD SIDE PANELS REMOVAL, REPAIR, AND REPLACEMENT.

TOOLS: No special tools required

SUPPLIES: Solvent, dry cleaning, type II (SD-2), Fed. Spec P-D-680
Clean rags

PERSONNEL: One

EQUIPMENT CONDITION: Truck parked, engine off, handbrake set.

a. Preliminary Procedures.

(1) If working on right, side hood panel, remove air cleaner, cap, and inlet screen. Refer to TM 9-2320-209-20.

(2) Open hood and side panels. Refer to TM 9-2320-209-10.

b. **Removal.**

FRAME 1

1. Raise retainer (1). Slide panel (2) forward and take it off.

END OF TASK

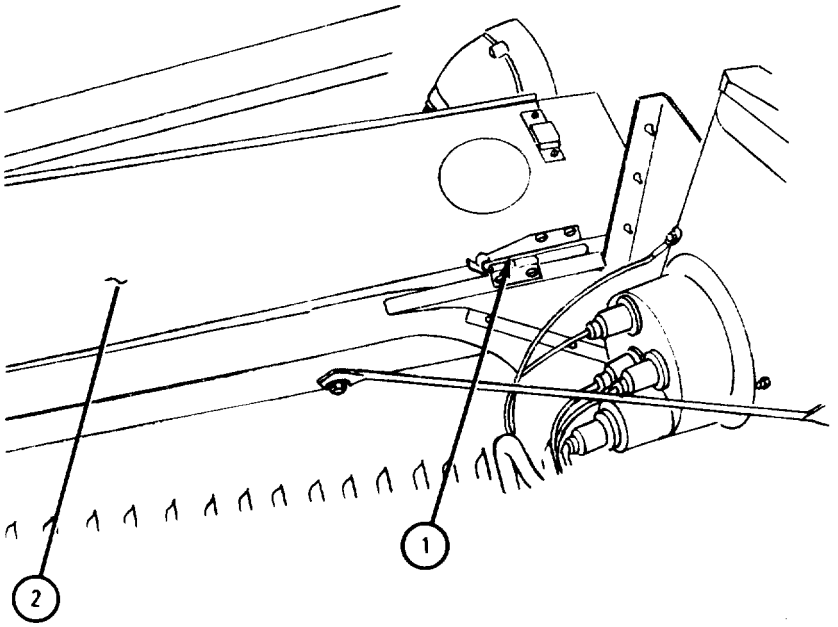

TA 085342

c. Disassembly.

FRAME 1

1. Take out four screws and nuts (1). Take off two locking latches (2).
2. Take out four screws and washers (3) and nuts (4). Take off retainer (5) and two hinges (6).

END OF TASK

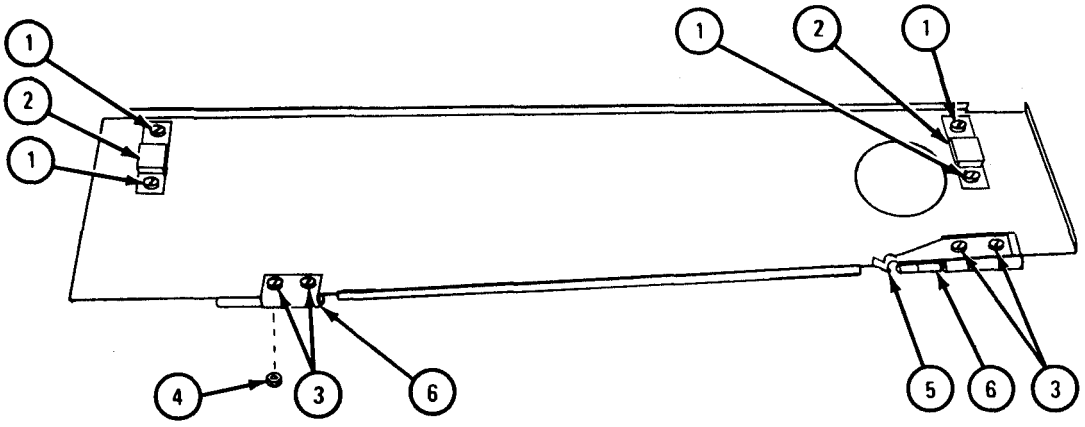

TA 085343

WARNING

Dry cleaning solvent is flammable. Do not use near an open flame. Keep a fire extinguisher nearby when solvent is used. Use only in well-ventilated places. Failure to do this may result in injury to personnel and damage to equipment.

d. Cleaning. Clean all parts in dry cleaning solvent. Dry with clean rags.

e. Inspection and Repair.

FRAME 1

1. Check that panel (1) has no bends, dents or cracks. Repair by straightening or welding. Refer to TM 9-237. If more repair is needed, get new part.
2. Check that two hinges (2), retainer (3), and locking latches (4), are not damaged. If parts are damaged, get new ones.

END OF TASK

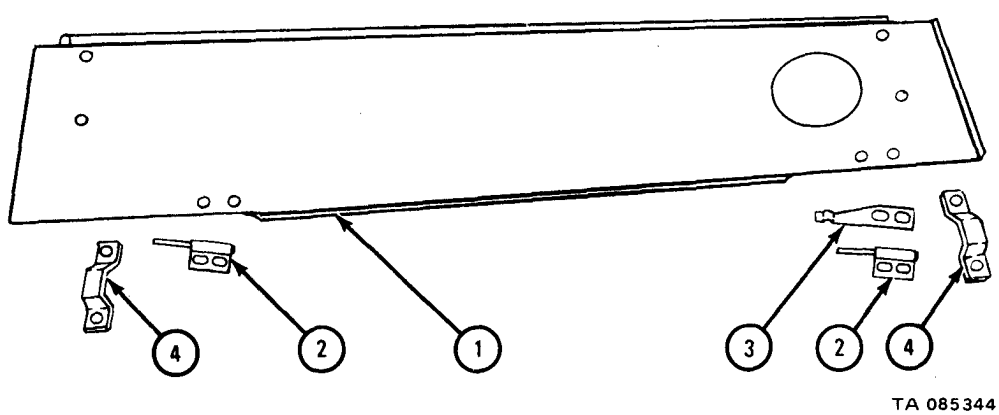

f . Assembly.

FRAME 1

1. Put two hinges (1) and retainer (2) in place as shown. Put in four screws and washers (3) and nuts (4).
2. Put two locking latches (5) in place as shown. Put in four screws and nuts (6).

END OF TASK

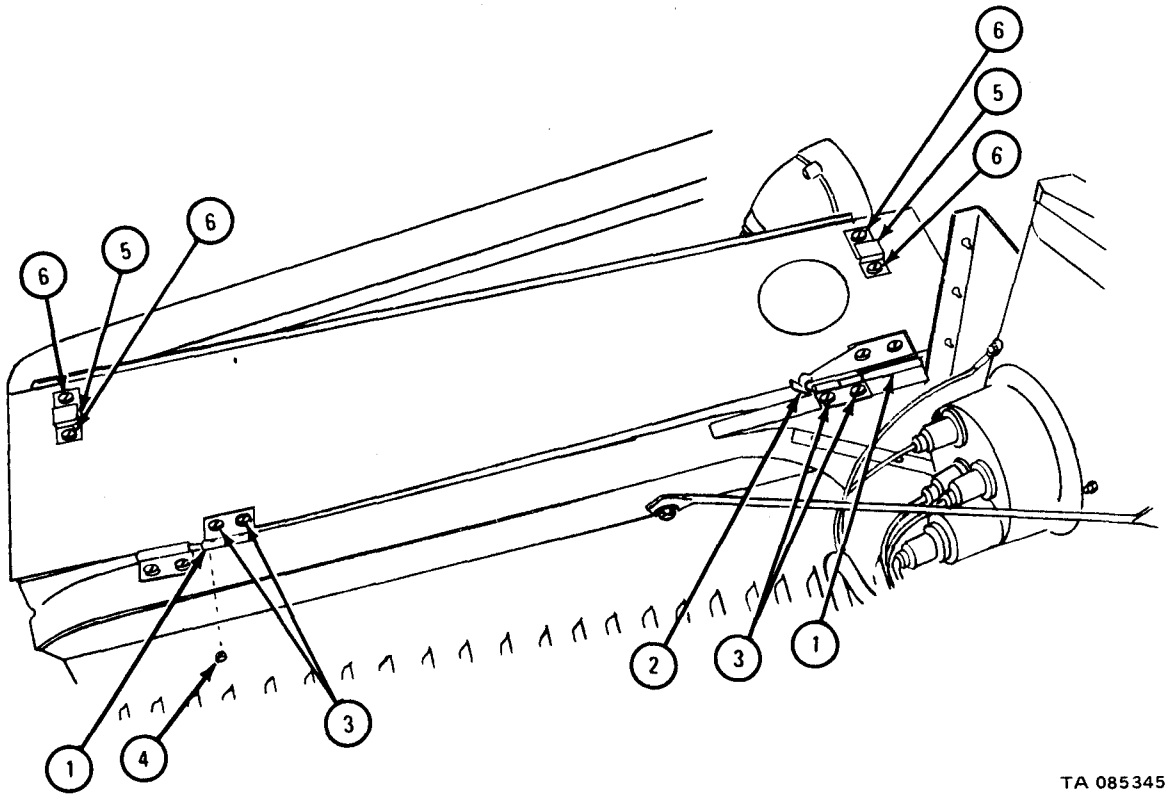

g. Replacement.

FRAME 1

1. Hold up retainer (1) and slide panel (2) into place.

NOTE

Follow-on Maintenance Action Required:

1. If work was done on right hood side panel, replace air cleaner, cap, and inlet screen. Refer to TM 9-2320-209-20.
2. Close hood and side panels. Refer to TM 9-2320-209-10.

END OF TASK

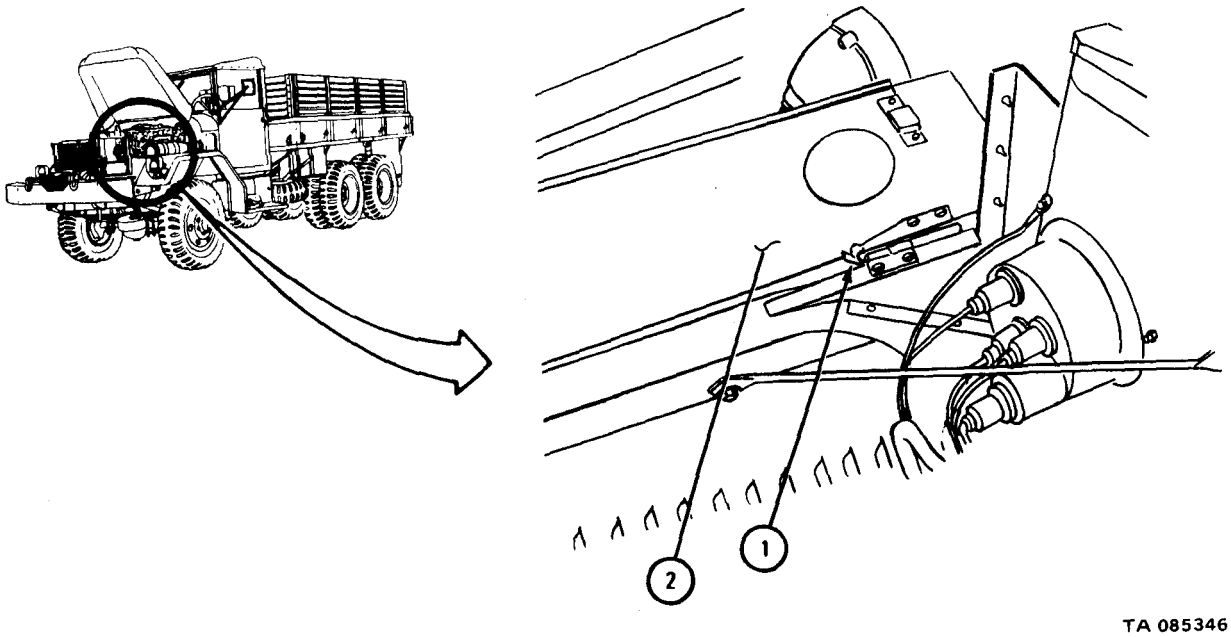

17-4. HOOD ASSEMBLY REMOVAL, REPAIR AND REPLACEMENT.

TOOLS: No special tools required

SUPPLIES: Solvent, dry cleaning, type II (SD-2), Fed. Spec P-D-680

PERSONNEL: Two

EQUIPMENT CONDITION: Truck parked, engine off, handbrake set.

a. Preliminary Procedure. Disconnect battery ground cable. Refer to TM 9-2320-209-20.

b. Removal.

FRAME 1

Soldier A	1.	Working behind instrument panel (1), hold four locknuts (2) and hinge reinforcements (3) on right side of truck. Tell soldier B when ready.
Soldier B	2.	Take out four capscrews (4).
Soldier A	3.	Take away four locknuts (2) and hinge reinforcements (3).
Soldiers A and B	4.	Do steps 1 through 3 on left side of truck.
Soldier B	5.	Unhook two spring fasteners (5).
Soldiers A and B	6.	Lift off hood (6).

END OF TASK

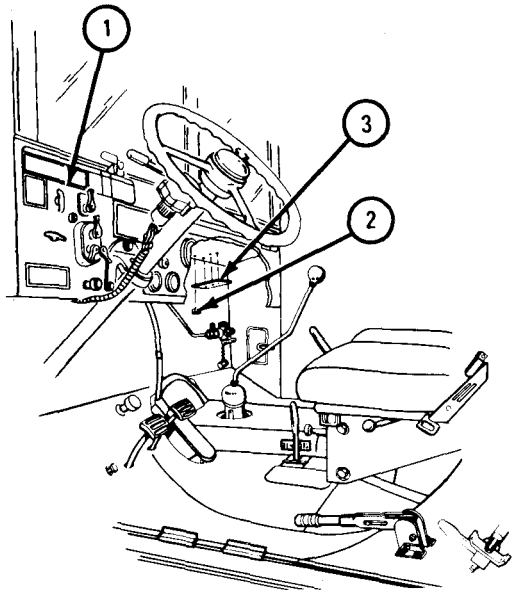

SOLDIER A

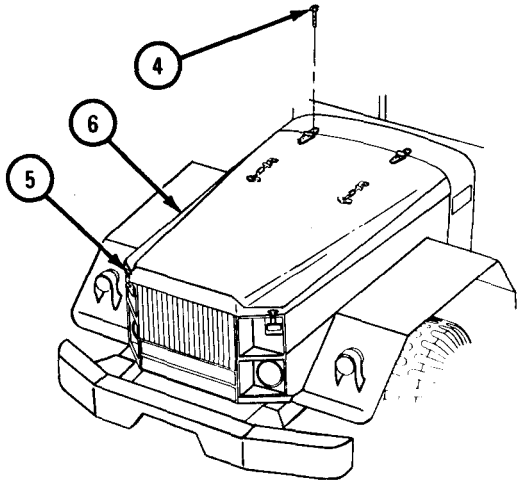

SOLDIER B

TA 084125

c. Disassembly.

FRAME 1

1. Take off two nuts (l).
2. Take out two capscrews (2) and take off hood catch (3).
3. Take off four nuts (4).
4. Take out four screws (5) and take off two brackets (6).
5. Take off four nuts (7).
6. Take out four capscrews (8) and two spring fasteners (9).

GO TO FRAME 2

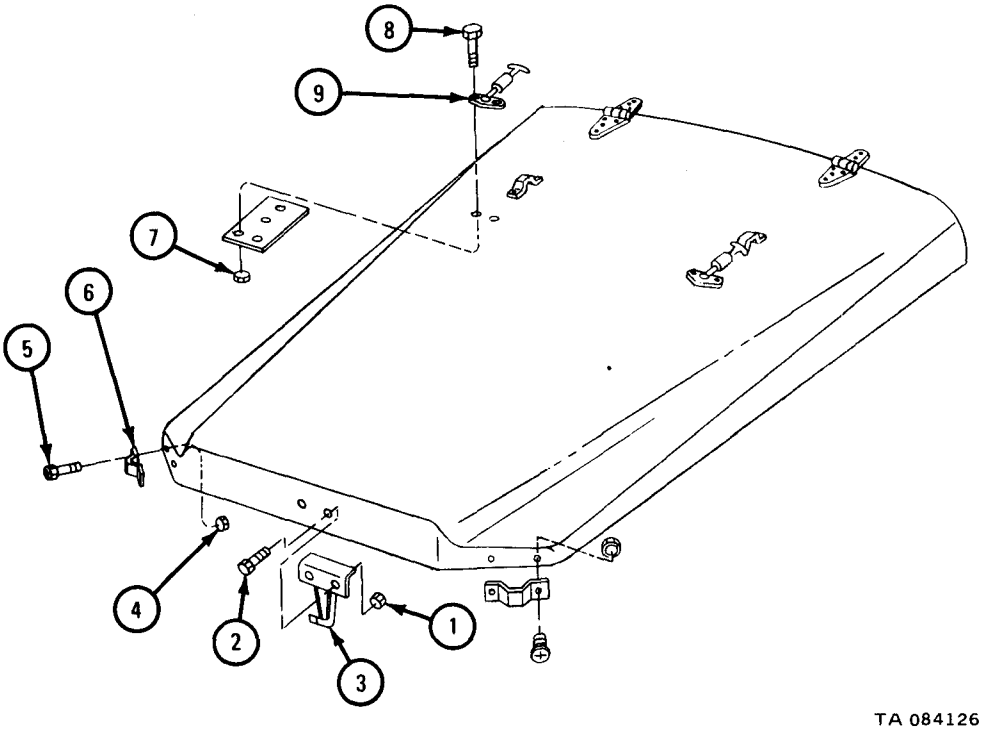

FRAME 2

1. Take off four nuts (1) and take off two reinforcements (2).
2. Take out four capscrews (3) and take off two brackets (4).
3. Take off eight nuts (5) and take off two reinforcements (6).
4. Take out eight capscrews (7) and two hinge straps (8).
5. Drill out eight rivets (9) and take off two bumpers (10).

END OF TASK

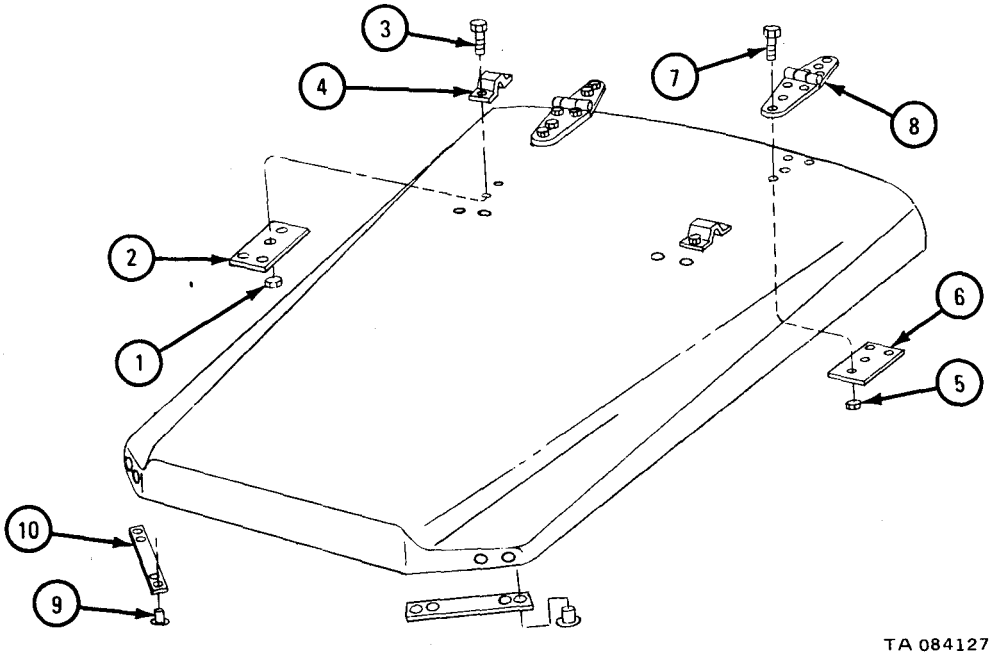

WARNING

Dry cleaning solvent is flammable. Do not use near an open flame. Keep a fire extinguisher nearby when solvent is used. Use only in well-ventilated places. Failure to do this may result in injury to personnel and damage to equipment.

Eye shields must be worn when using compressed air. Eye injury can occur if eye shields are not used.

CAUTION

Do not use steam to clean catches. Steam may damage the catch spring.

d. Cleaning. Clean all parts in dry cleaning solvent. Steam clean hood.

e. Inspection. Check that hood has no bends, dents, cracks or welding defects. Check that all parts are not worn or damaged.

f. Repair. Repair minor damage by welding or straightening. For welding, refer to TM 9-237. For straightening of sheet metal, refer to FM 43-2. Remove dents with a peening hammer or rubber mallet. Parts that cannot be repaired must be replaced. Paint all parts after repair.

g. Assembly.

FRAME 1

1. Put two bumpers (1) in place and rivet eight rivets (2).
2. Put two hinge straps (3) and eight capscrews (4) in place.
3. Put two reinforcements (5) in place and put on eight locknuts (6).
4. Put two brackets (7) and four cap screws (8) in place.
5. Put two reinforcements (9) in place and put on four locknuts (10).

GO TO FRAME 2

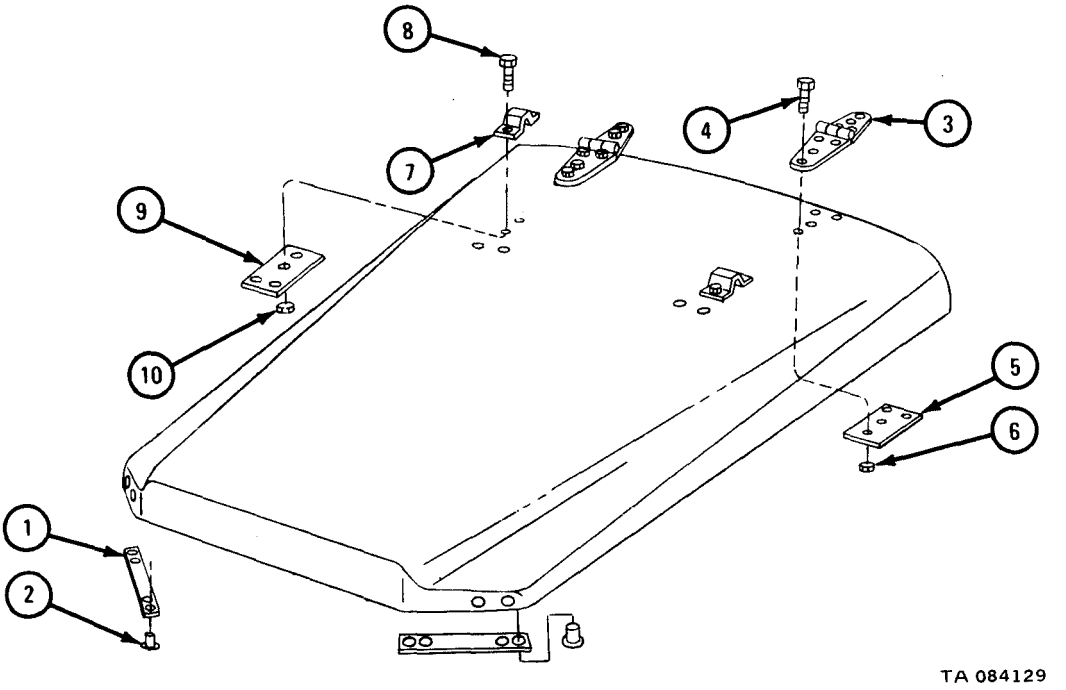

FRAME 2

1. Put two fasteners (l) and four capscrews (2) in place and put on four locknuts (3).
2. Put two brackets (4) and four screws (5) in place and put on four locknuts (6).
3. Put hood catch (7) and two capscrews (8) in place and put on two locknuts (9).

END OF TASK

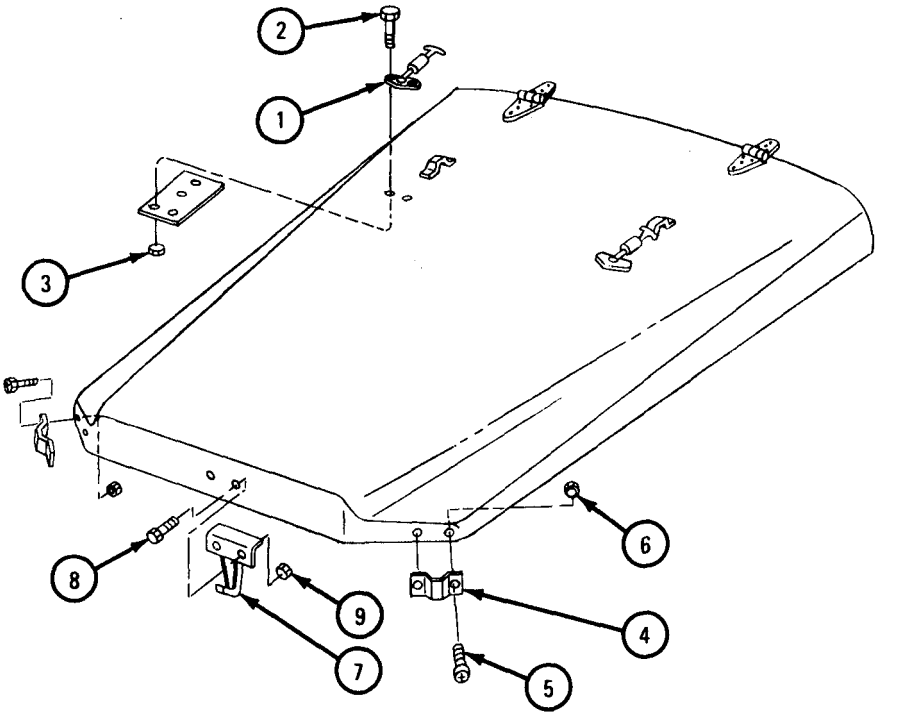

h . Replacement.

FRAME 1

Soldiers A and B 1. Put hood (1) in place on truck.

Soldier A 2. Put in eight screws (2) and hold them in place.

Soldier B 3. Working behind instrument panel (3), put reinforcement (4) in place and put on eight locknuts (5).

4. Close hood with fasteners (6). Check hood for fit in closed position.

NOTE

Follow-on Maintenance Action Required:

Reconnect battery ground. Refer to TM 9-2320-209-20.

END OF TASK

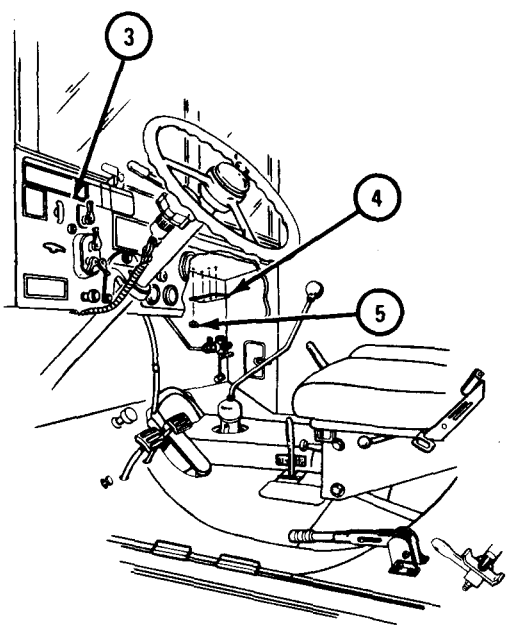

SOLDIER A

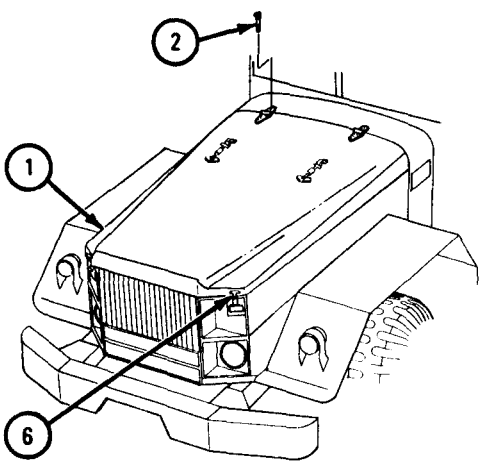

SOLDIER B

TA 084131

17-5. CAB REMOVAL, REPAIR, AND REPLACEMENT.

TOOLS: No special tools required

SUPPLIES: None

PERSONNEL: Two

EQUIPMENT CONDITION: Truck parked, engine off, handbrake set, wheels chocked.

a. Preliminary Procedures.

(1) Remove battery ground cables. Refer to TM 9-2320-209-20.

(2) Remove hood. Refer to para 17-4.

(3) Remove left and right fenders. Refer to para 17-7.

(4) If working on trucks with tarpaulin cab cover, remove tarpaulin. Refer to TM 9-2320-209-10.

(5) If working on trucks with a hard top closure, remove hard top. Refer to Part 3, para 21-16.

(6) Remove spare wheel assembly. Refer to TM 9-2320-209-10.

(7) Remove windshield. Refer to TM 9-2320-209-20.

(8) Remove engine air cleaner. Refer to TM 9-2320-209-20.

(9) Remove instrument cluster. Refer to TM 9-2320-209-20.

(10) Remove instrument electrical wiring harness. Refer to TM 9-2320-209-20.

(11) Remove speedometer and tachometer cables. Refer to TM 9-2320-209-20.

(12) Remove driver's seat and companion seat cushions. Refer to TM 9-2320-209-20.

(13) Remove floor tunnels. Refer to TM 9-2320-209-20.

(14) Remove headlight dimmer switch. Refer to TM 9-2320-209-20.

(15) Remove brake and clutch pedals. Refer to TM 9-2320-209-20.

(16) Remove transfer controls. Refer to TM 9-2320-209-20.

(17) Remove transmission shifting levers. Refer to TM 9-2320-209-20.

(18) Remove handbrake cable. Refer to TM 9-2320-209-20.

(19) Remove throttle controls. Refer to TM 9-2320-209-20.

(20) Remove accelerator controls. Refer to TM 9-2320-209-20.

(21) If working on trucks with power takeoff, remove power takeoff controls. Refer to TM 9-2320-209-20.

(22) Remove cab doors. Refer to TM 9-2320-209-20.

(23) Remove steering column. Refer to Part 1, para 14-3.

(24) Remove air pressure gage connector. Refer to Instrument Cluster Removal and Replacement, TM 9-2320-209-20.

(25) Remove generator regulator wiring connectors. Refer to TM 9-2320-209-20.

(26) Remove exhaust pipe mounting bracket. Refer to TM 9-2320-209-20.

(27) Remove left and right mirror and bracket assemblies. Refer to TM 9-2320-209-20.

(28) Remove engine stop control. Refer to TM 9-2320-209-20.

b . Removal.

FRAME 1

1. Take off safety nut (1).
2. Take out mounting bolt (2) and two flat washers (3) with spring (4).
3. Do steps 1 and 2 again for other bolt holding cab front mounting support (5) and frame side members (6) together.

NOTE

Do not take out insulator (7).

GO TO FRAME 2

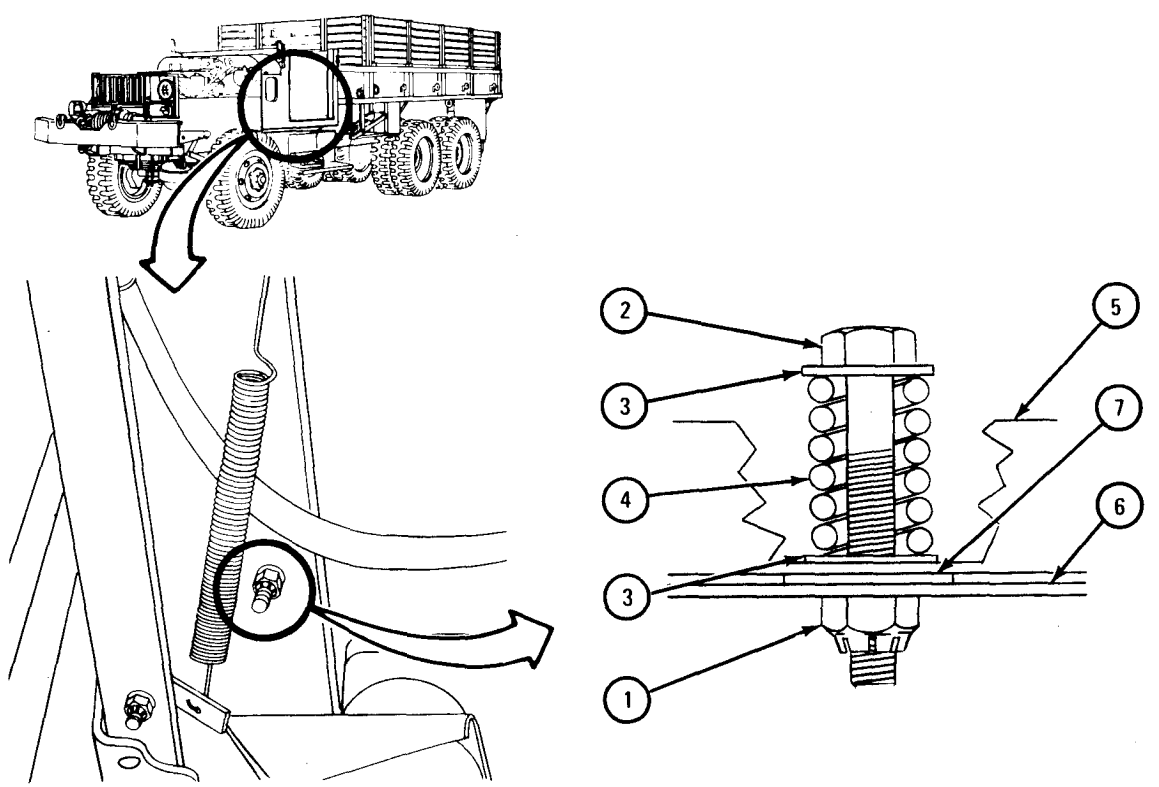

FRAME 2

1. Take off two safety nuts (1) and two washers (2).
2. Take out two bolts (3) and four washers (4) with two springs (5) from cab rear mounting bracket (6).

GO TO FRAME 3

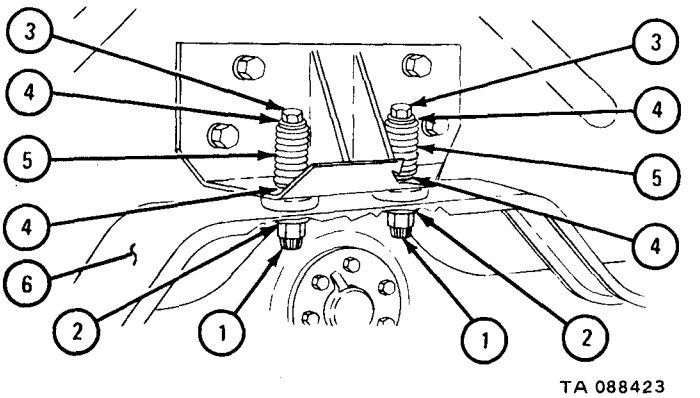

FRAME 3

Soldiers A and B	1.	Put lifting sling around cab (1) and join it to hoist.
Soldier A	2.	Using hoist, lift cab (1) up a few inches.
Soldier B	3.	Take out two cab rear mounting insulators (2) and two front mounting shims (3).
	4.	Guide cab (1) off truck and onto wood blocks as soldier A lifts cab.
Soldier A	5.	Using hoist, lift cab (1) off truck and onto wood blocks.
Soldiers A and B	6.	Take lifting sling off cab (l).

END OF TASK

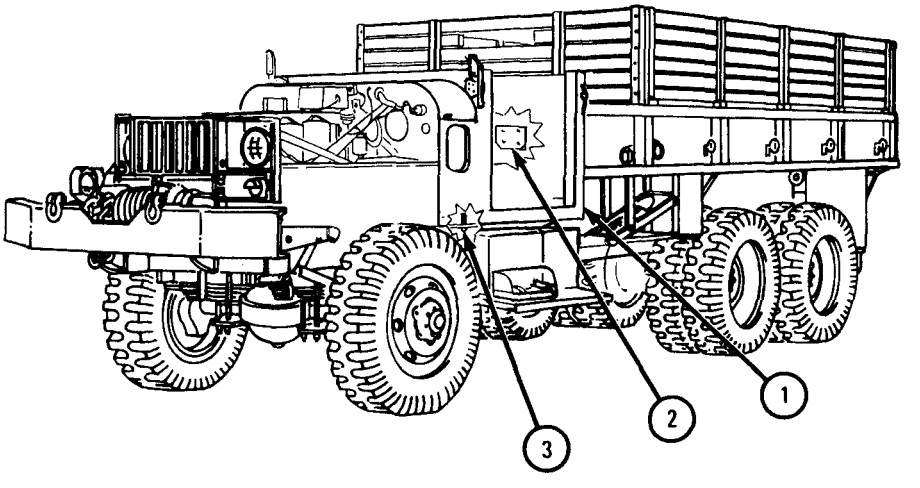

TA 088424

c. Disassembly.

FRAME 1

1. Take out four screws (1) and take off data plate (2).
2. Take out five screws (3) and take off data plate (4).

GO TO FRAME 2

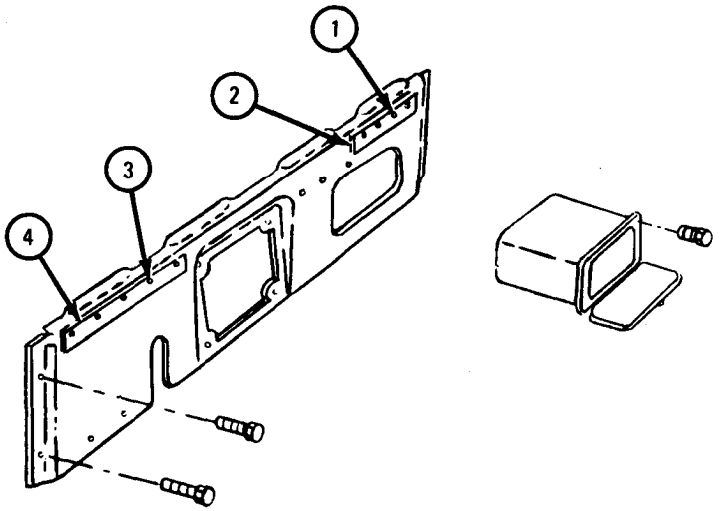

TA 105673

FRAME 2

1. Takeout 10 screws (1) holding glove compartment (2) to instrument panel (3). Take out glove compartment.
2. Take out two screws (4) and take off two nuts (5) and washers (6) from support bracket (7).
3. Take out six screws (8) from top of instrument panel (3).
4. Take out four screws (9) from instrument panel (3), two on each side. Take off instrument panel.

GO TO FRAME 3

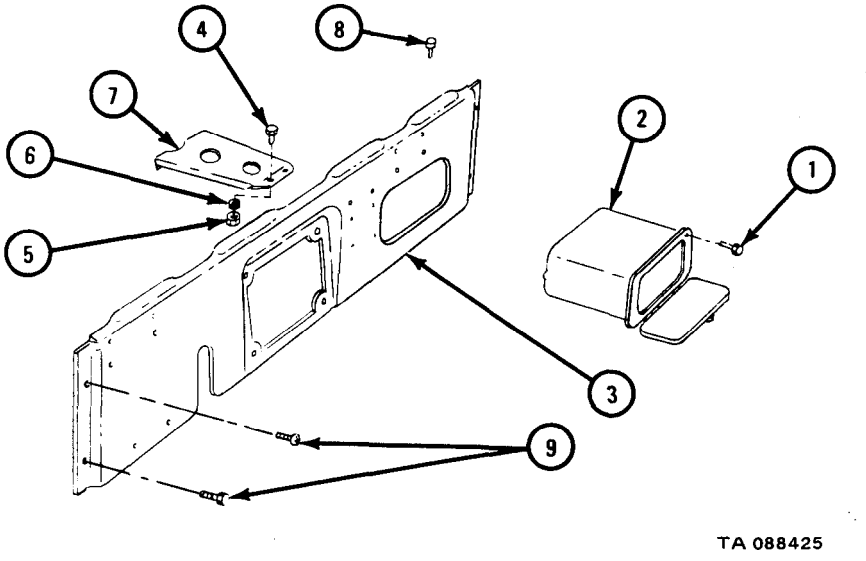

FRAME 3

1. Take out nine screws (1) and vent screen (2).
2. Take out and throw away cotter pin (3).
3. Take out hinge pin (4), vent door (5), and gasket (6).
4. Do steps 1, 2, and 3 again for vent door (5) on other side of cab.
5. Take out four screws (7) and take off four nuts (8).
6. Take off grab handle (9) and plate (10).
7. Do steps 5 and 6 again for grab handle on other side of cab.

GO TO FRAME 4

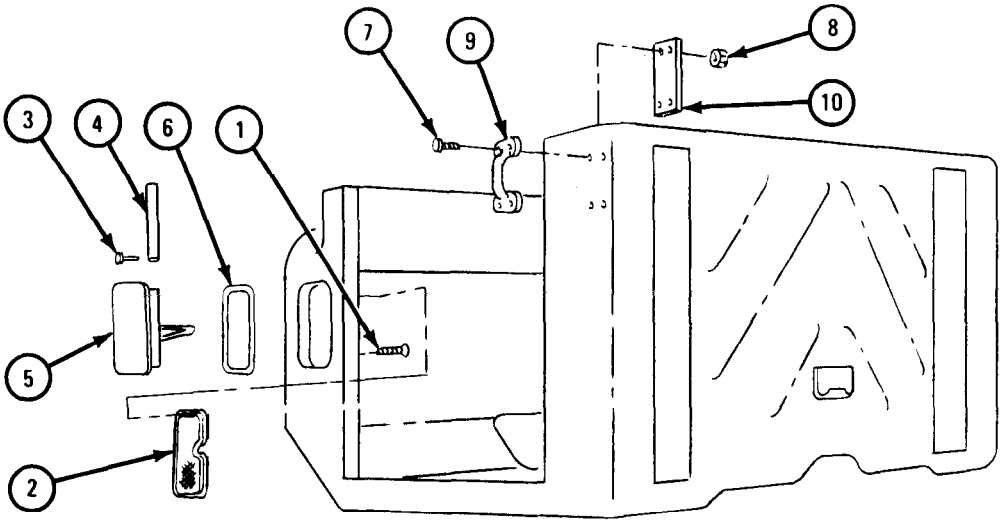

TA 088426

FRAME 4

1. Take off nut (1). Take out screw (2) and hinge (3).
2. Take off stud (4), nut (5), and knob (6) from hinge (3).
3. Take out four screws (7) and take hinge (8) off cab (9).
4. Do steps 1, 2, and 3 again for window hinge on other side of cab (9).

GO TO FRAME 5

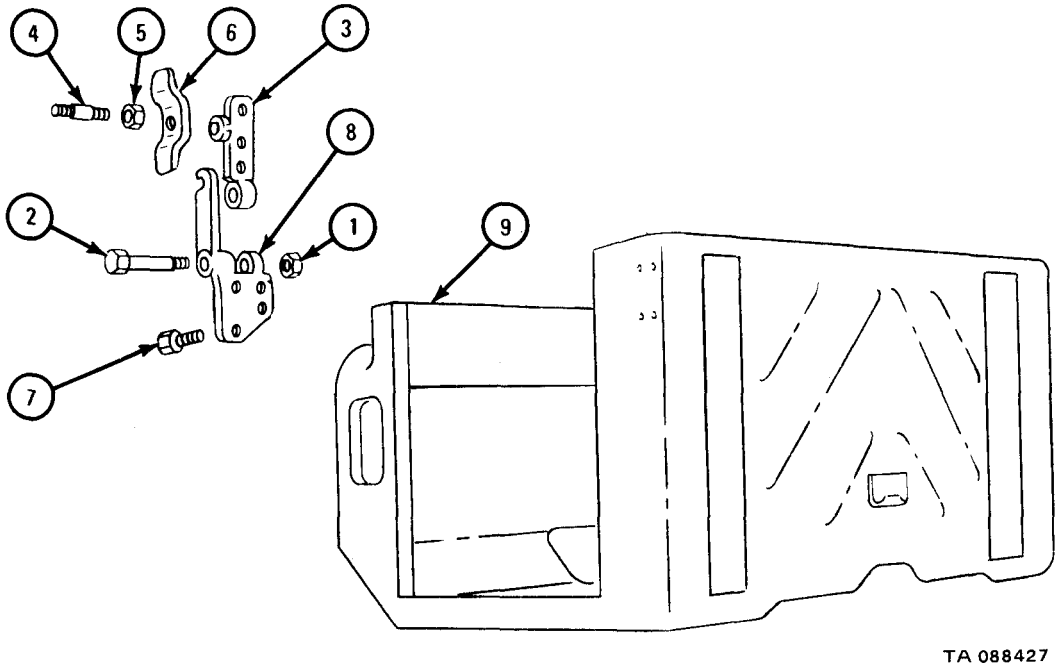

FRAME 5

NOTE

If working on early model driver's seat, do this frame.
If working on floating driver's seat, go to frame 7.

1. Take out four screws (1) and take off four nuts (2) and eight washers (3).
2. Pull out locking handle (4) and lift seat frame (5) off base (6).

GO TO FRAME 6

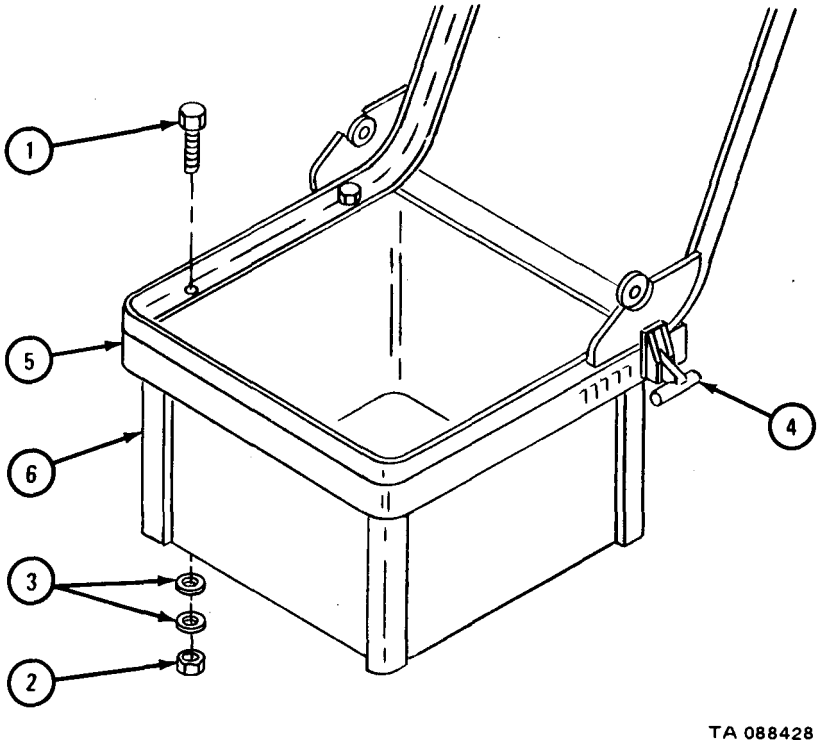

FRAME 6

1. Take out two screws (1) and lockwashers (2).
2. Take out four screws (3) and take off four nuts (4). Take out companion seat frame (5).

GO TO FRAME 8

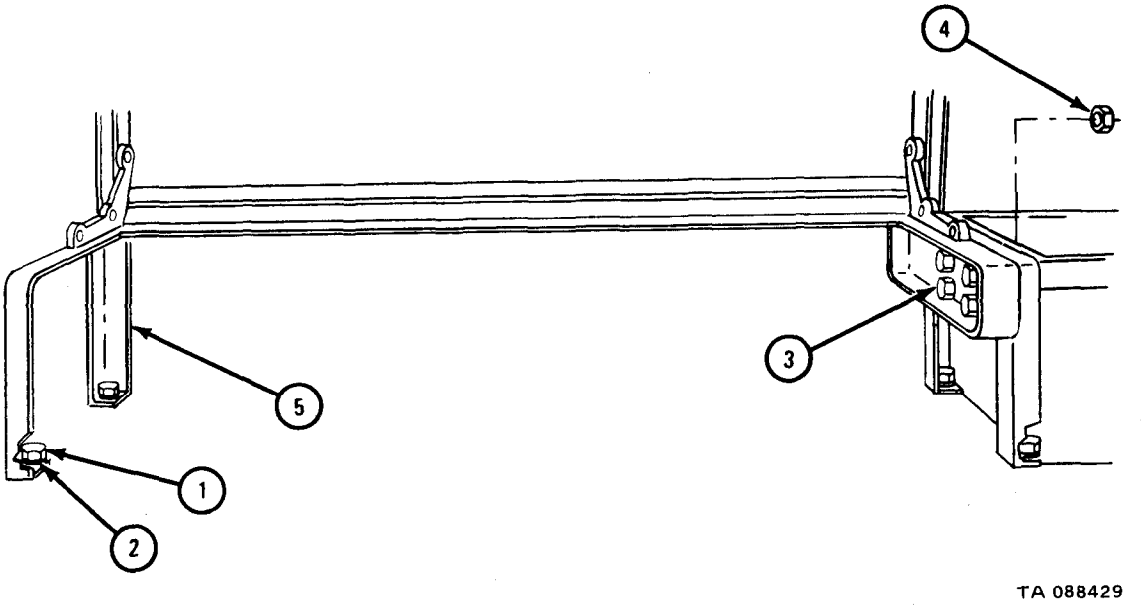

FRAME 7

1. Take out four screws (1) and washers (2).
2. Take out driver's seat frame (3).

GO TO FRAME 8

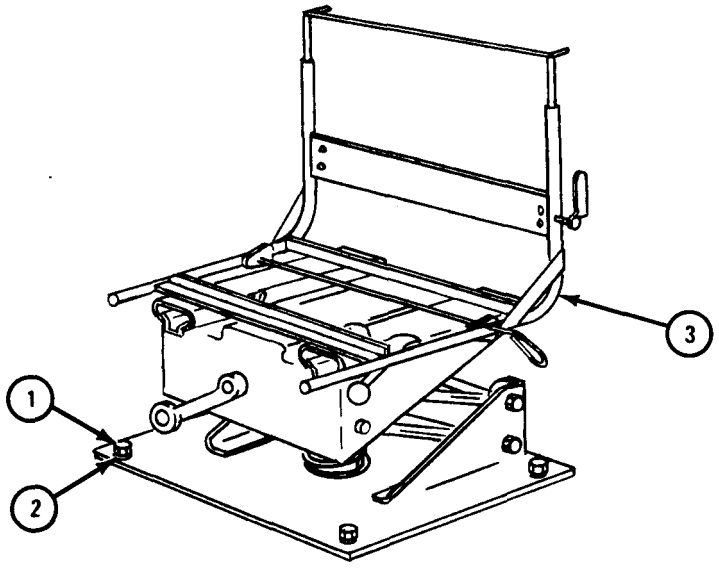

TA 088430

FRAME 8

1. Take out two screws (l) and take off two nuts (2).
2. Take off handle (3).
3. Take out four screws and washers (4) and take out companion seat frame (5).

GO TO FRAME 9

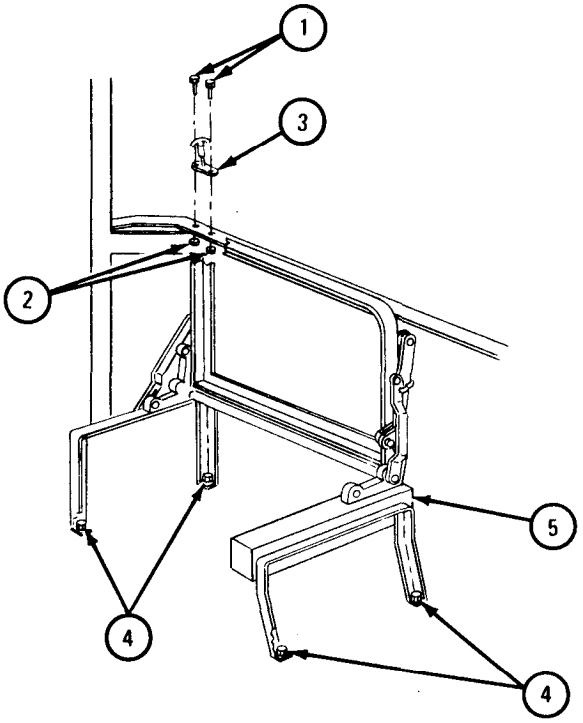

TA 088431

FRAME 9

1. Take out 10 screws (1) and take off rear tunnel (2).
2. Take out 12 screws (3) and take off 12 nuts (4).
3. Take off rear panel cab reinforcement (5).
4. Take out three screws (6) and take off master cylinder access door (7).
5. On trucks with double-ended power takeoff units, take out two screws (8), two self-locking nuts (9), and power takeoff lockout plate (10).

GO TO FRAME 10

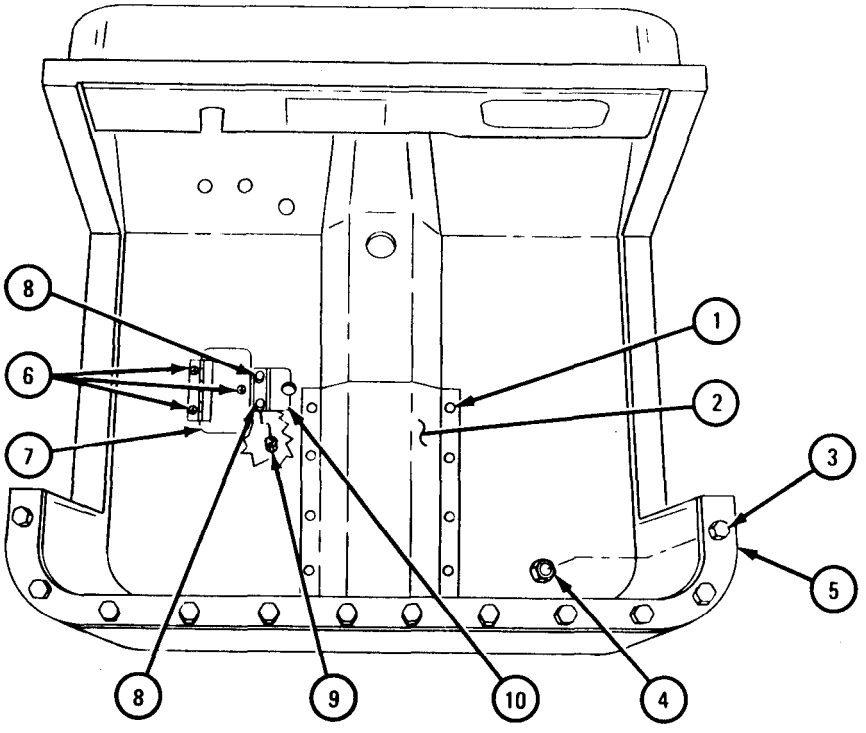

TA 088432

FRAME 10

1. Take out four capscrews and lockwashers (1).
2. Take off rear mounting bracket (2).

GO TO FRAME 11

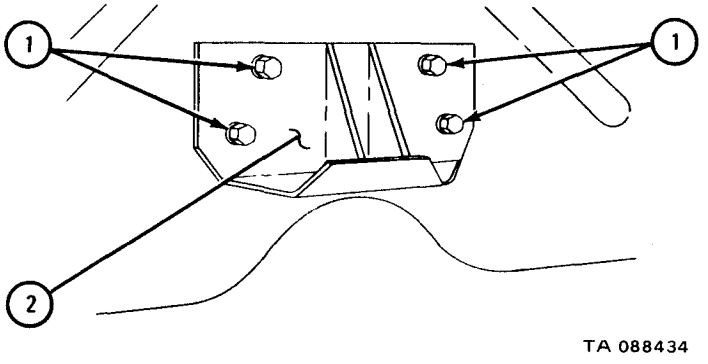

FRAME 11

1. Take out three capscrews and lockwashers (1).
2. Take off gun mount bracket (2).

GO TO FRAME 12

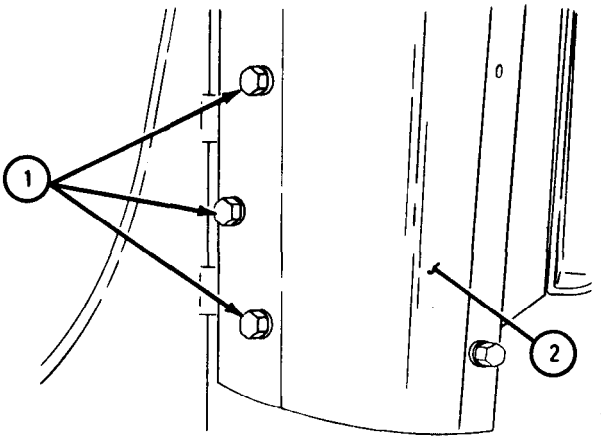

TA 088435

FRAME 12

1. Takeout 14 screws and lockwashers (1) and take off rear gun mount bracket(2).
2. Do step 1 again for rear gun mount bracket on other side of cab.
3. Take out two screws (3) and take off two self-locking nuts (4) and lashing hook (5).
4. Do step 3 again for other five lashing hooks.
5. Take off two self-locking nuts (6) and two cab-to-frame bumpers (7).

END OF TASK

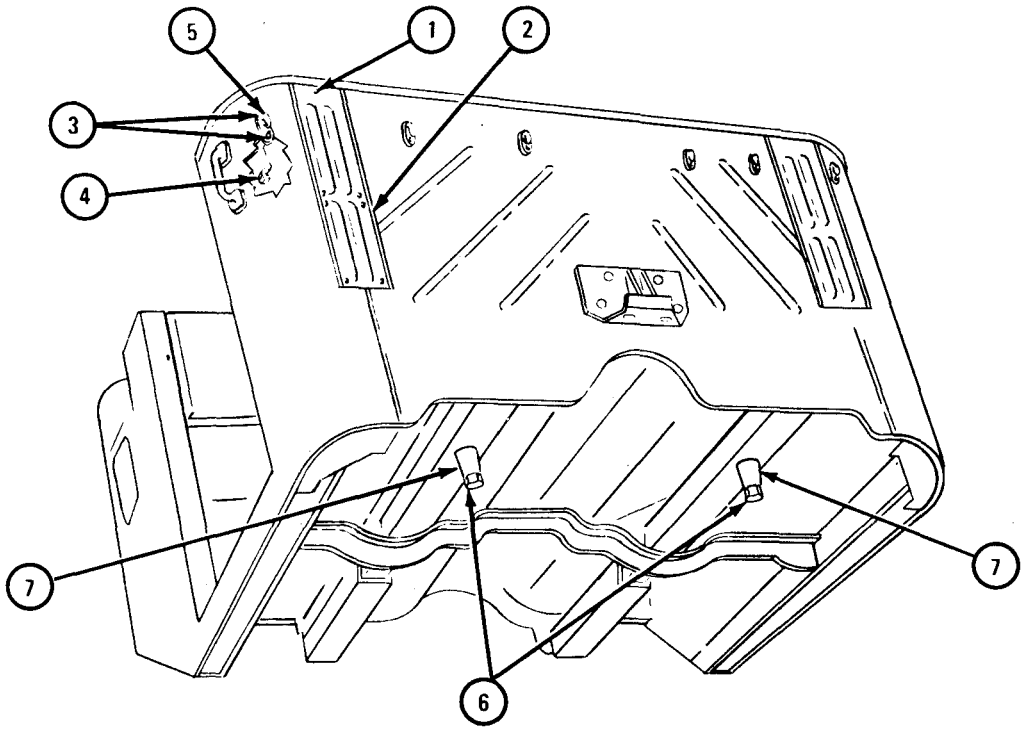

TA 088436

d. Cleaning. There are no special cleaning procedures needed. Refer to cleaning procedures given in Part 1, para 1-3.

NOTE

Clean all parts before inspection and before assembly.

e. Inspection and Repair.

FRAME 1

1. Check that cab body (1), instrument panel (2), glove compartment (3), grab handle (4), plate (5), and vent door (6) have no cracks, dents, holes or torn welds. Straighten dents. Refer to FM 43-2. Weld cracks, holes, and torn welds. Refer to TM 9-237.
2. Check that vent screen (7), vent gasket (8), and hinge pin (9) have no breaks or other damage. If parts are damaged, get new ones in their place.

GO TO FRAME 2

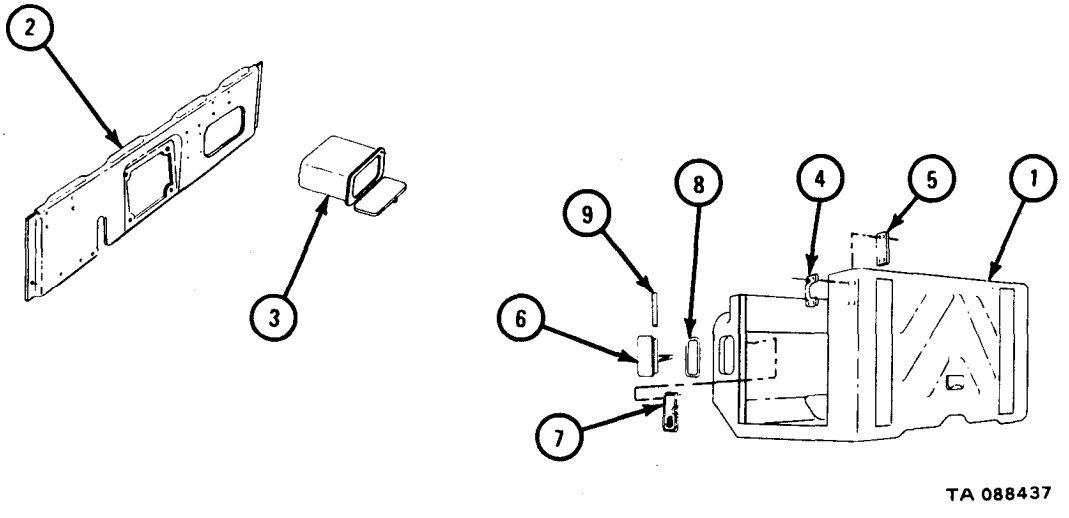

FRAME 2

1. Check that rear tunnel (1), rear panel cab reinforcement (2), master cylinder access door (3), power takeoff lever hole plate (4), front mounting support plate (5), rear mounting bracket (6), and gun mount bracket (7) have no cracks, dents, holes or torn welds. Weld cracks, holes and torn welds. Refer to TM 9-237. Straighten dents. Refer to FM 43-2.

GO TO FRAME 3

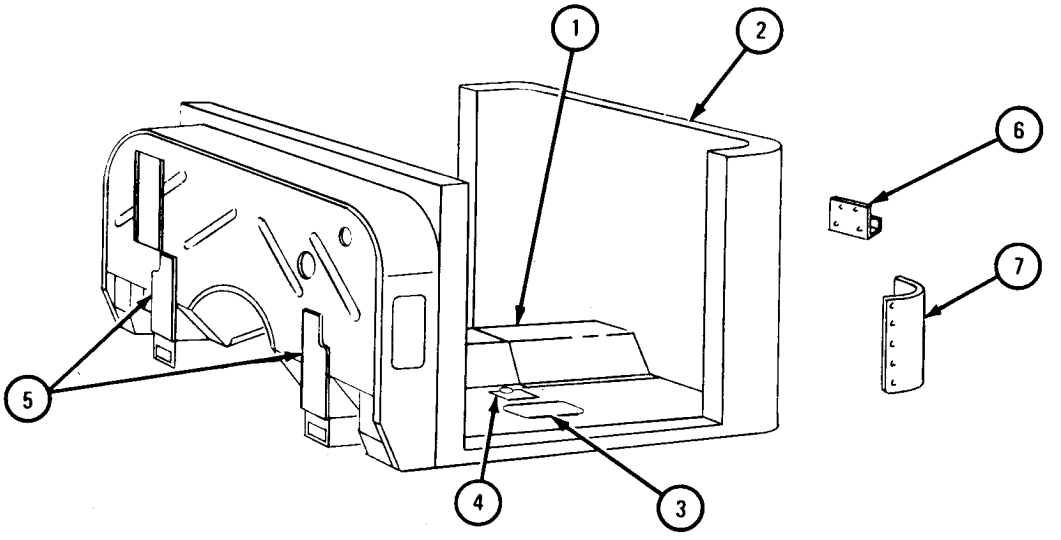

TA 088438

FRAME 3

1. Check that two gun mount brackets (1) and six lashing hooks (2) have no cracks, dents, holes or torn welds. Straighten dents. Refer to FM 43-2. Weld cracks, holes, and torn welds. Refer to TM 9-237.
2. Check that cab-to-frame bumpers (3) are not damaged. If parts are damaged, get new ones in their place.

NOTE

For early model seats, do steps 3 and 4. For later model seats, do steps 5 and 6.

3. Inspect and repair early model driver's seat. Refer to para 17-13.
4. Inspect and repair early model companion seat. Refer to para 17-14.
5. Inspect and repair floating driver's seat. Refer to para 17-12.
6. Inspect and repair late model companion seat. Refer to para 17-15.
7. If any parts need more repair, get new ones.

END OF TASK

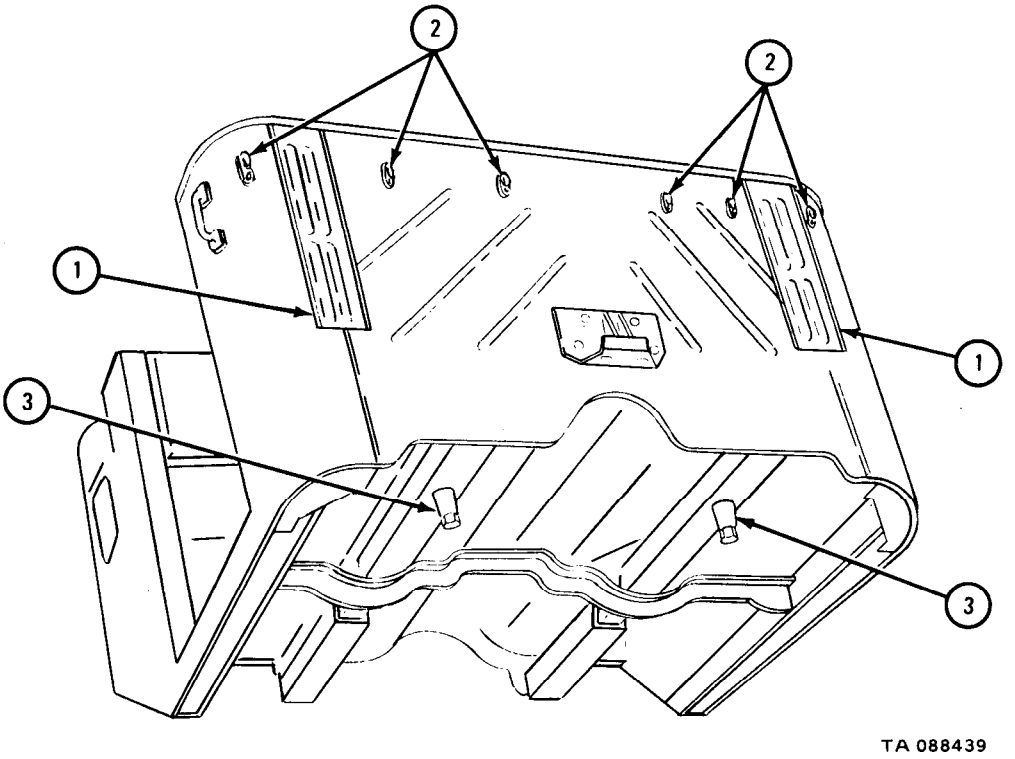

f. Assembly.

FRAME 1

1. Put rear gun mount bracket (1) on cab (2) and put in 14 screws and lockwashers (3).
2. Do step 1 again for rear gun mount bracket on other side of cab (2).
3. Put lashing hook (4) on cab (2). Put in two screws (5) and put on self-locking nuts (6).
4. Do step 3 again for other five lashing hooks (4).
5. Put two cab-to-frame bumpers (7) on cab (2) and put on two self-locking nuts (8).

GO TO FRAME 2

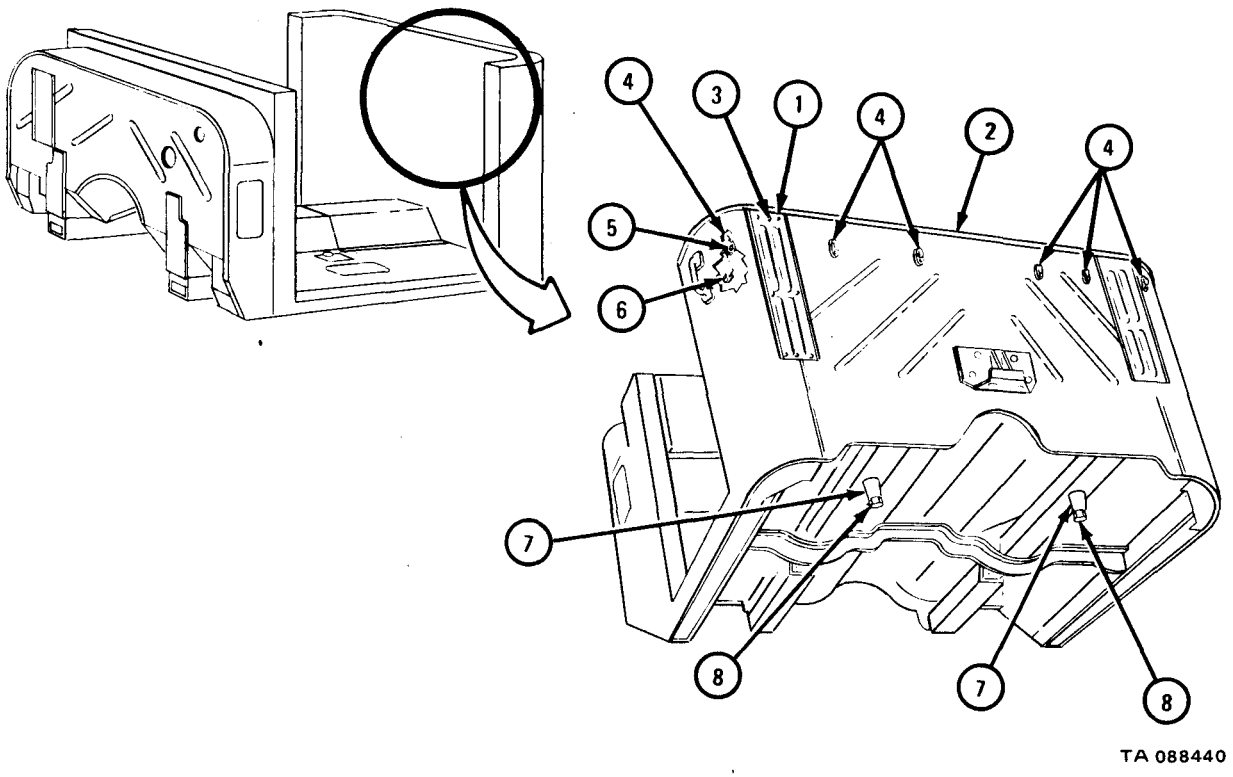

FRAME 2

1. Put gun mount bracket (1) on cab (2) and put in three capscrews and lock-washers (3).

GO TO FRAME 3

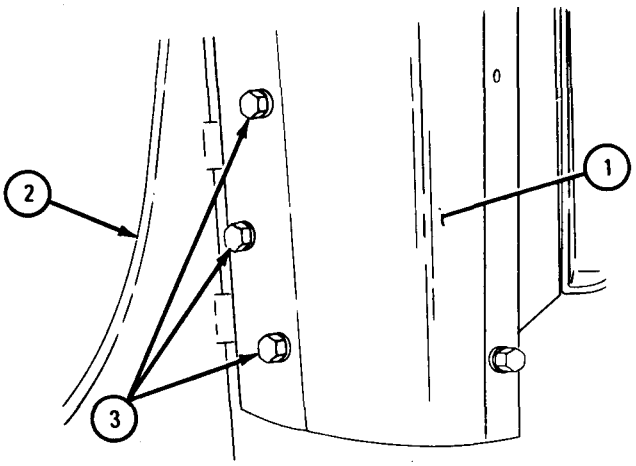

TA 088441

FRAME 3

1. Put rear mounting bracket (1) on cab (2) and put in four capscrews and lockwashers (3).

GO TO FRAME 4

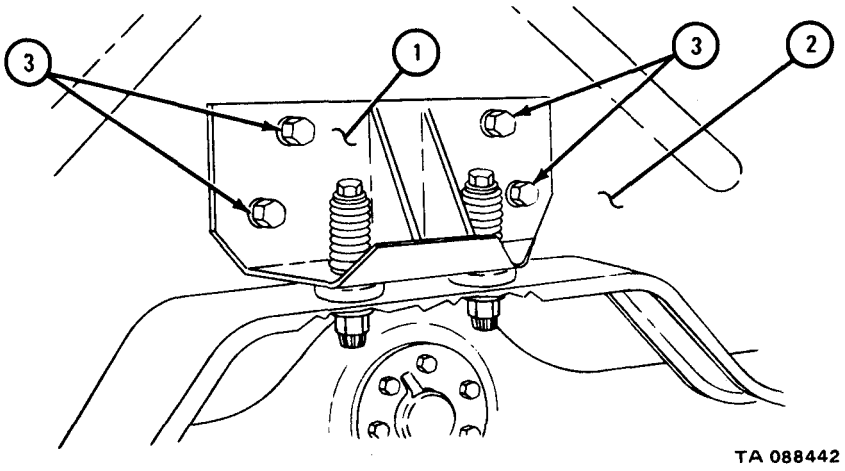

FRAME 4

1. Put rear tunnel (1) in cab (2) and put in eight screws (3).
2. Put rear panel cab reinforcement (4) on cab (2) and put in 12 screws (5). Put on 12 nuts (6).
3. Put master cylinder access door (7) in cab (2) and put in three screws (8).

GO TO FRAME 5

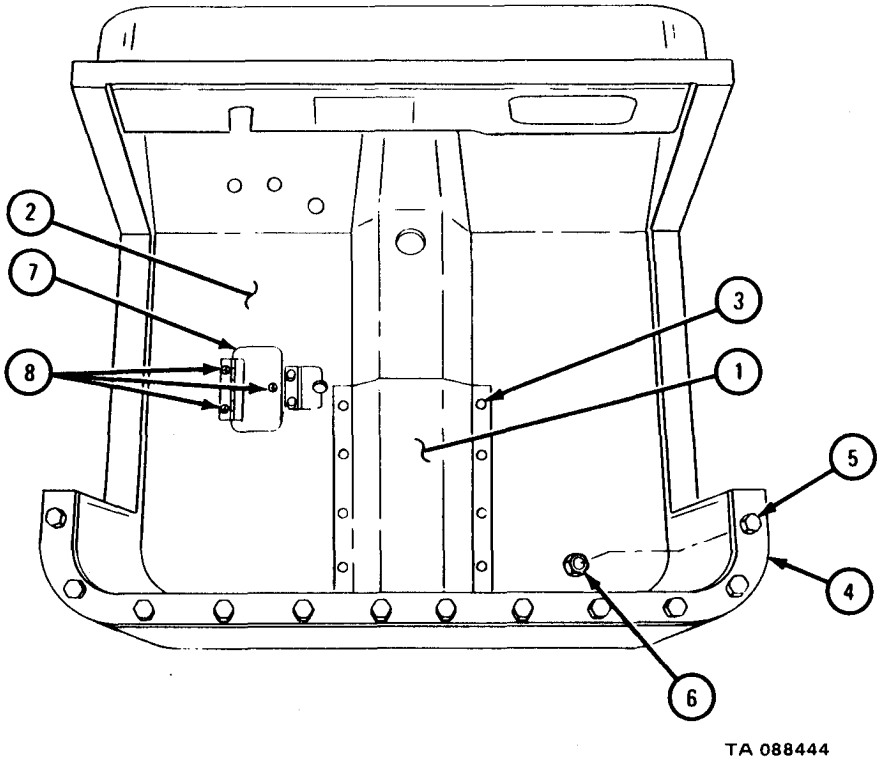

FRAME 5

1. For trucks with double-ended power takeoff, put power takeoff lockout plate (1) on cab floor (2).
2. Put in two screws (3) and put on two self-locking nuts (4).

GO TO FRAME 6

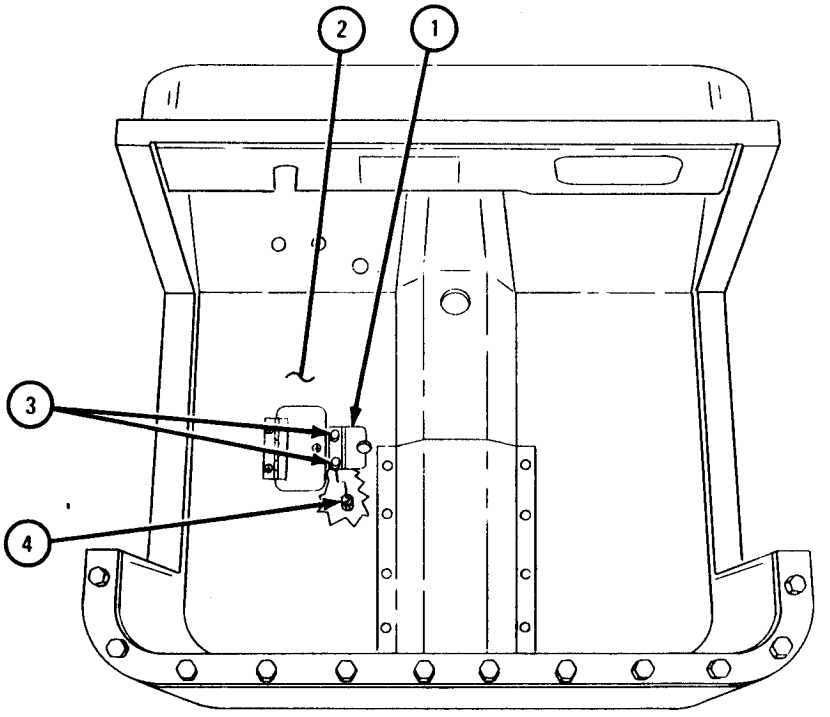

TA 088445

FRAME 6

1. Put hinge (1) on cab (2) and put in four screws (3).
2. Put knob (4) on hinge (5). Put in stud (6) and put on nut (7).
3. Aline hole in hinge (5) with hole in hinge (1).
4. Put in screw (8) and put on nut (9).
5. Do steps 1, 2, 3, and 4 again for window hinge (1) on other side of cab (2).

GO TO FRAME 7

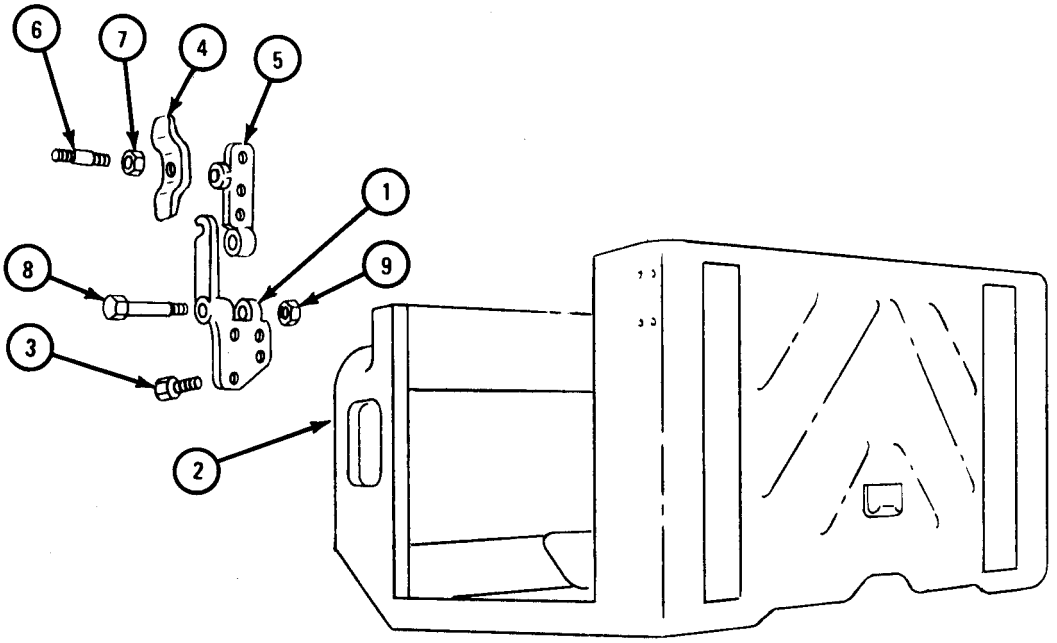

TA 088446

FRAME 7

1. Put gasket (1) and vent door (2) on cab (3).
2. Put in hinge pin (4) and put in cotter pin (5).
3. Put vent screen (6) on cab (3) and put in nine screws (7).
4. Do steps 1, 2, and 3 again for vent door (2) on other side of cab (3).

GO TO FRAME 8

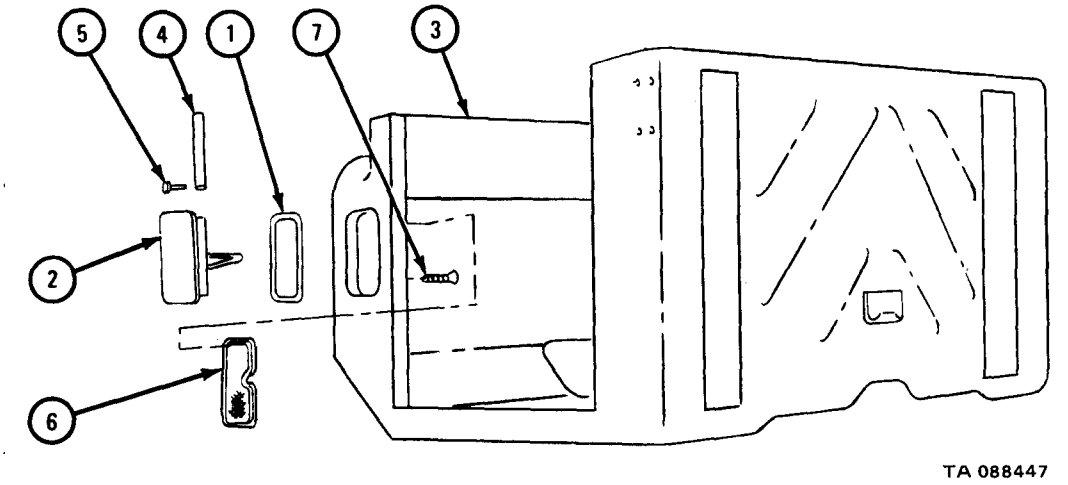

FRAME 8

1. Put grab handle (1) and plate (2) on cab (3) and put in four screws (4).
2. Put on four nuts (5).
3. Do steps 1 and 2 again for grab handle on other side of cab (3).

GO TO FRAME 9

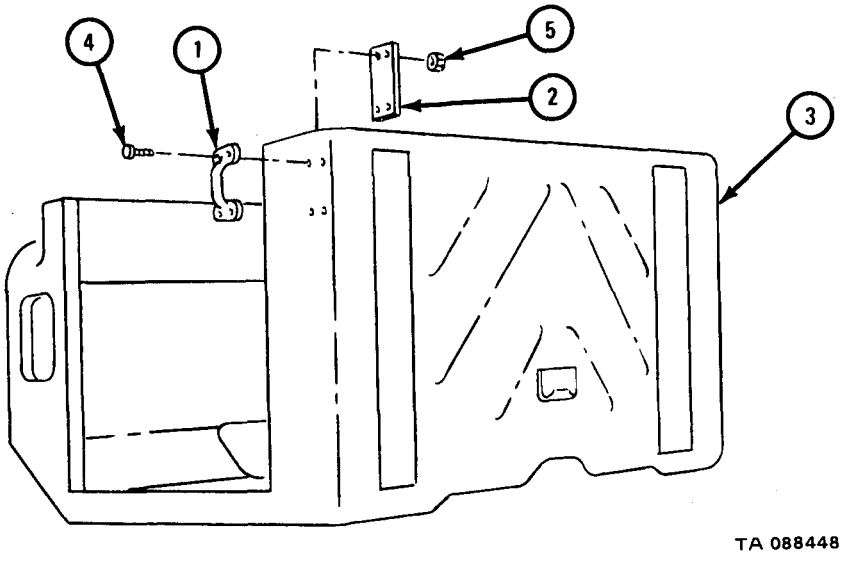

FRAME 9

1. Put instrument panel (1) on support bracket (2).
2. Put in two screws (3) and put on two nuts (4) with lockwasher (5).
3. Put six screws (6) into top of instrument panel (1).
4. Put glove compartment (7) into instrument panel (1) and put in 10 screws (8).
5. Put four screws (9) into instrument panel (1), two on each side.

GO TO FRAME 10

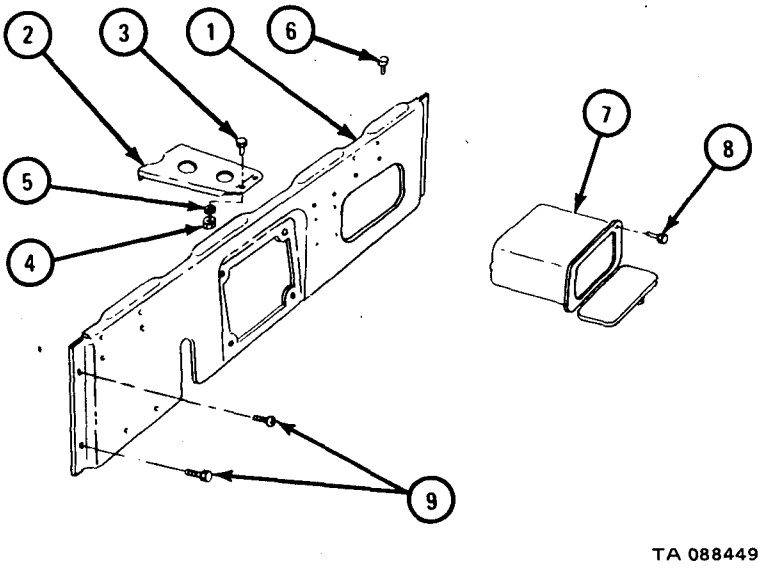

FRAME 10

1. Put data plate (1) in place and aline screw holes. Put in four screws (2).
2. Put data plate (3) in place and aline screw holes. Put in five screws (4).

GO TO FRAME 11

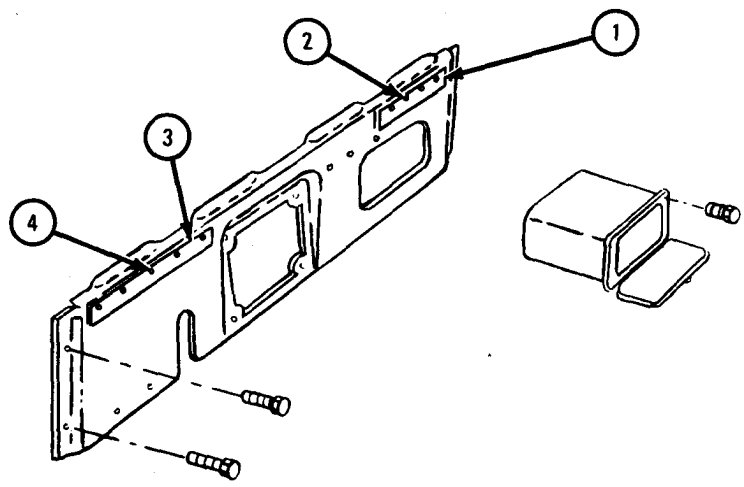

TA 105674

FRAME 11

NOTE

For early model driver's seat, do this frame. For floating driver's seat, go to frame 13.

1. Hold locking handle (1) in up position and put driver's seat frame (2) in place on base (3). Let go of locking handle.
2. Put in four screws (4).
3. Put on eight washers (5) and put on four nuts (6).

GO TO FRAME 12

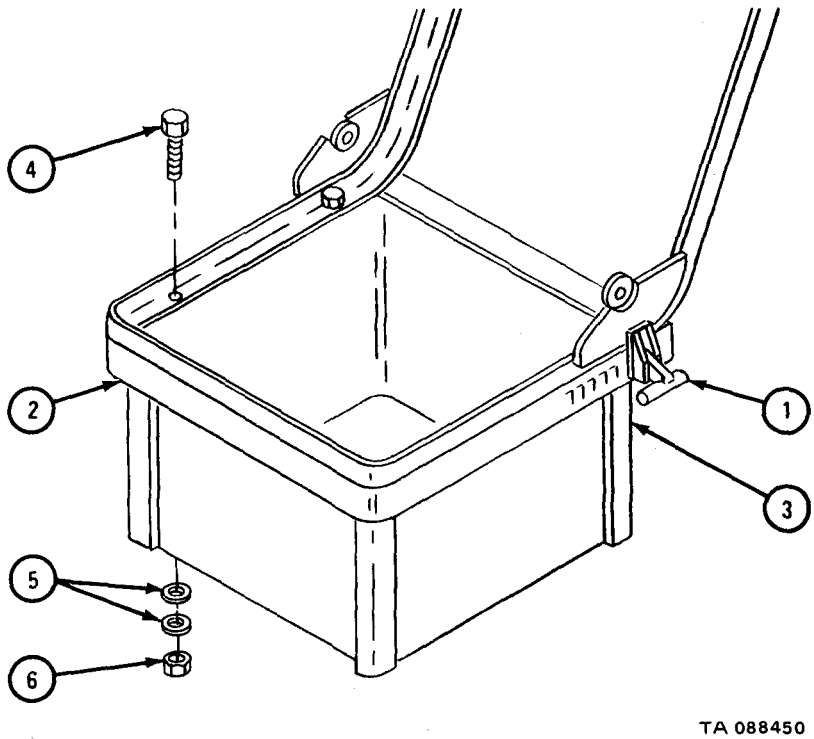

FRAME 12

1. Aline screw holes in companion seat frame (1) with screw holes in driver's seat (2) and put in four screws (3).
2. Put on four nuts (4).
3. Put in two screws with locksvashers (5).

END OF TASK

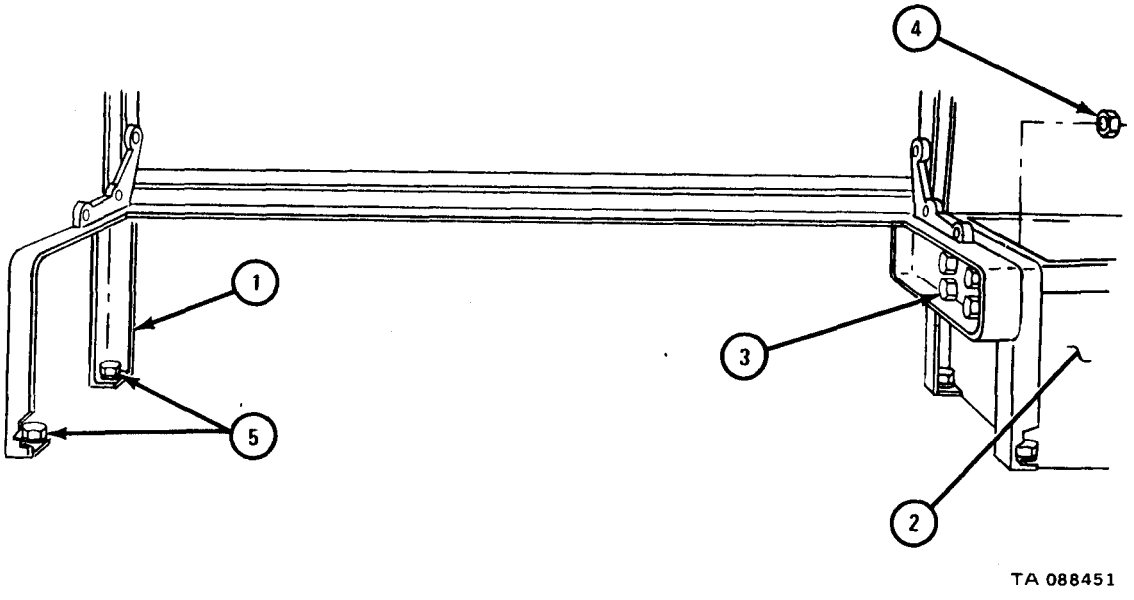

FRAME 13

1. Put driver's seat (1) on cab floor (2) and put in four screws and 1ock-washers (3).

GO TO FRAME 14

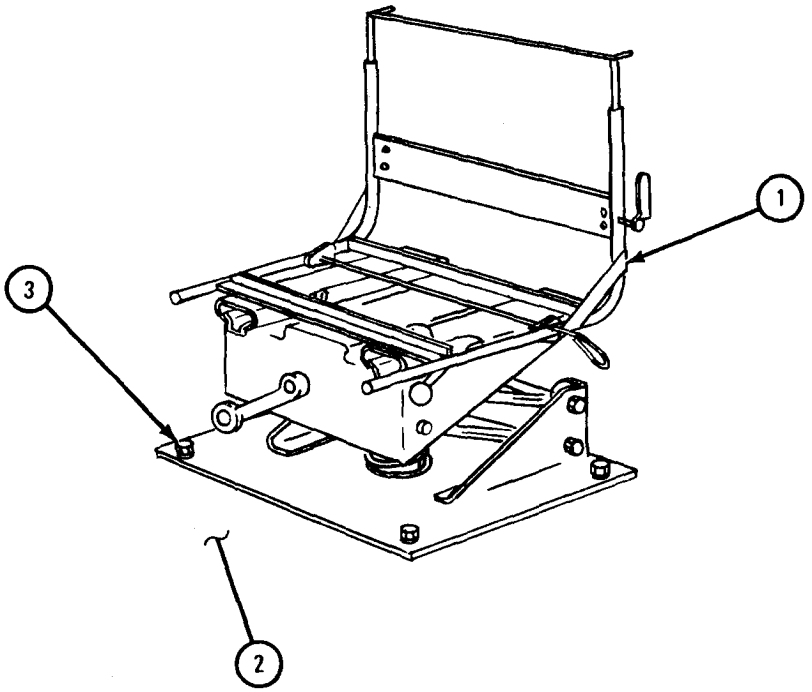

TA 088452

FRAME 14

1. Put companion seat frame (1) on cab floor (2).
2. Put in four screws and washers (3).
3. Put handle (4) on cab (2) and put in two screws (5).
4. Put on two nuts (6).

END OF TASK

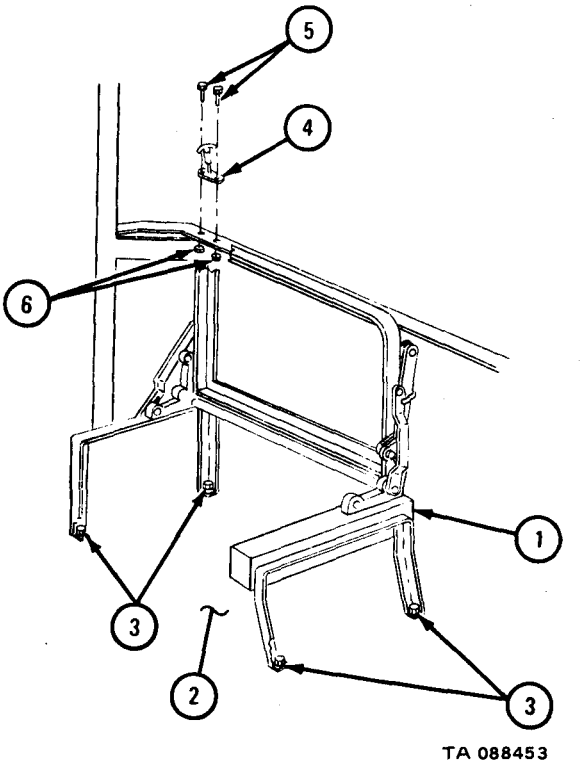

g. Replacement.

FRAME 1

Soldiers A and B	1.	Put lifting sling around cab (1) and hook it onto hoist.
Soldier A	2.	Guide cab (1) until it is a few inches above truck frame (2).
Soldier B	3.	Using hoist, move cab (1) into place above truck as soldier A guides it.
Soldier A	4.	Put two cab rear mounting insulators (3) between cab rear mounting bracket (4) and truck frame (2).
	5.	Put two bolts (5) through cab rear mounting bracket (4), cab rear mounting insulators (3), and truck frame (2).

GO TO FRAME 2

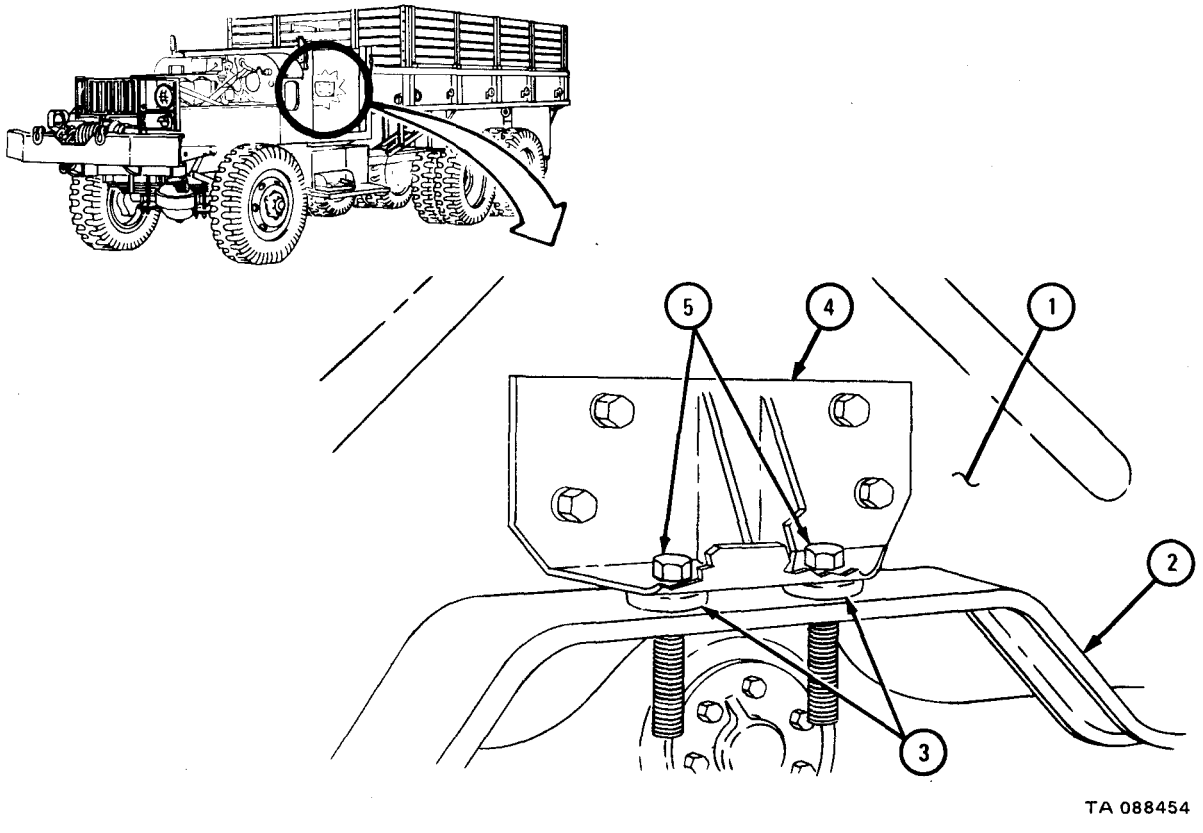

FRAME 2

Soldier A 1. Put insulator (1) between cab front mounting support (2) and truck frame side members (3).

2. Put bolt (4) through cab front mounting support (2), insulator (1), and truck frame side member (3).

3. Do steps 1 and 2 again for other cab front mounting support.

NOTE

Use bolts (4) in cab front mounting support (2) and cab rear mounting bracket as guides to aline cab (5) and truck frame (3).

4. Guide cab (5) onto truck.

Soldier B 5. Using hoist, lower cab (5) onto truck as soldier A guides it.

Soldier A 6. Take lifting sling off cab (5).

GO TO FRAME 3

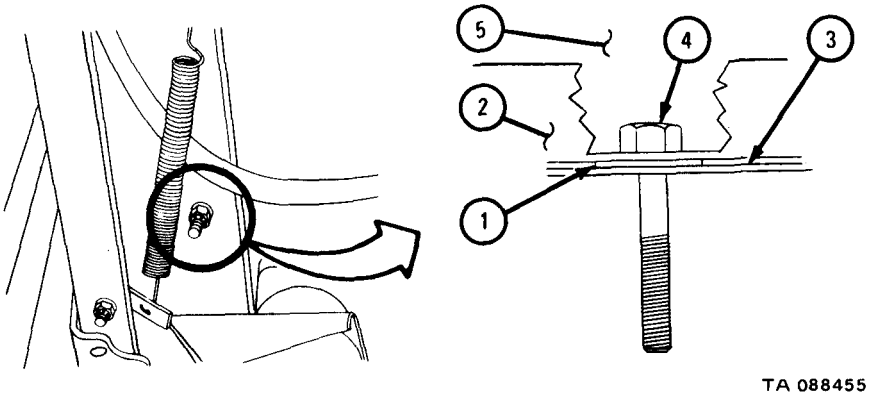

FRAME 3

1. Take out two bolts (1).
2. Put washer (2), spring (3), and washer (4) on each bolt (1).
3. Put two bolts (1) through cab rear mounting bracket (5), insulators (6), and truck frame (7).
4. Put on two washers (8) and two nuts (9).

GO TO FRAME 4

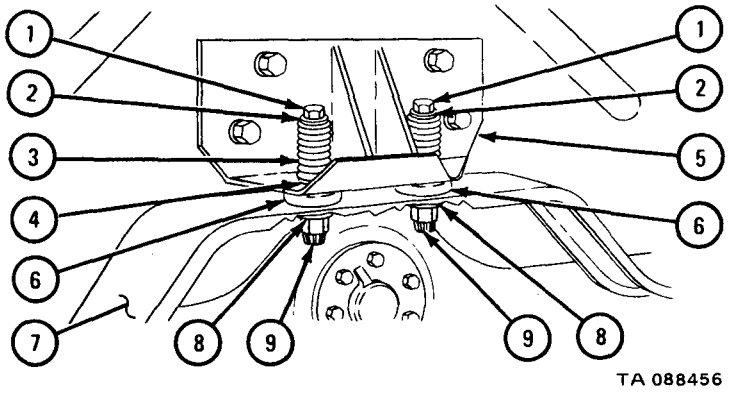

FRAME 4

1. Take out two bolts (1).
2. Put washer (2), spring (3), and washer (4) on each of two bolts (1).
3. Put two bolts (1) through cab front mounting support (5), insulator (6), and frame side members (7).
4. Put on two safety nuts (8).

GO TO FRAME 5

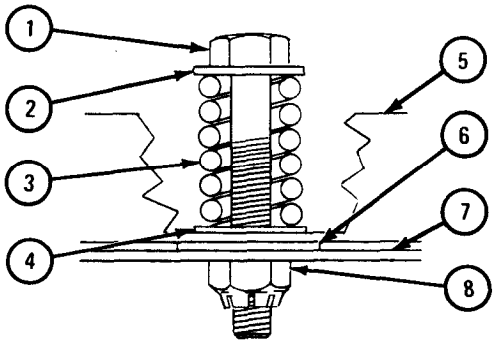

TA 088457

FRAME 5

NOTE

Follow-on Maintenance Required:

1. Replace cab doors. Refer to TM 9-2320-209-20.
2. On trucks with power takeoff, replace power takeoff controls. Refer to TM 9-2320-209-20.
3. Replace accelerator controls. Refer to TM 9-2320-209-20.
4. Replace throttle controls. Refer to TM 9-2320-209-20.
5. Replace handbrake cable. Refer to TM 9-2320-209-20.
6. Replace transmission shifting levers. Refer to TM 9-2320-209-20.
7. Replace transfer controls. Refer to TM 9-2320-209-20.
8. Replace brake and clutch pedals. Refer to TM 9-2320-209-20.
9. Replace headlight dimmer switch. Refer to TM 9-2320-209-20.
10. Replace floor tunnels. Refer to TM 9-2320-209-20.
11. Replace seat cushions. Refer to TM 9-2320-209-20.
12. Replace speedometer and tachometer cables. Refer to TM 9-2320-209-20.
13. Replace instrument electrical wiring harness. Refer to TM 9-2320-209-20.
14. Replace instrument cluster. Refer to TM 9-2320-209-20.
15. Replace engine air cleaner. Refer to TM 9-2320-209-20.
16. Replace windshield. Refer to TM 9-2320-209-20.
17. Replace spare wheel assembly. Refer to TM 9-2320-209-10.
18. On trucks with a hard top closure, replace hard top. Refer to Part 3, para 21-16.
19. On trucks with tarpaulin top, put on tarpaulin. Refer TM 9-2320-209-10.
20. Replace left and right fenders. Refer to TM 9-2320-209-20.
21. Replace hood. Refer to para 17-4.
22. Replace engine stop control. Refer to TM 9-2320-209-20.
23. Replace steering column. Refer to Part 1, para 14-3.
24. Replace air compressor governor assembly. Refer to TM 9-2320-209-20.
25. Replace air pressure gage connector. Refer to Instrument Cluster Removal and Replacement, TM 9-2320-209-20.
26. Replace generator regulator wiring connectors. Refer to TM 9-2320-209-20.
27. Replace exhaust pipe mounting bracket. Refer to TM 9-2320-209-20.
28. Replace left and right mirror and bracket assemblies. Refer to TM 9-2320-209-20.
29. Replace battery ground cables. Refer to TM 9-2320-209-20.

END OF TASK

17-6. CAB DOOR REMOVAL, REPAIR AND REPLACEMENT.

NOTE

This task is the same for the left and right cab doors. This task is shown for the right cab door.

TOOLS: No special tools required

SUPPLIES: Soapy water

PERSONNEL: Two

EQUIPMENT CONDITION: Truck parked, engine off, handbrake set.

a. Removal.

FRAME 1

	1. Open door (1). Working inside cab, take out and throw away cotter pin (2).
Soldier A	2. Hold door (1).
Soldier B	3. Take out eight screws (3).
Soldiers A and B	4. Take off door (1).

END OF TASK

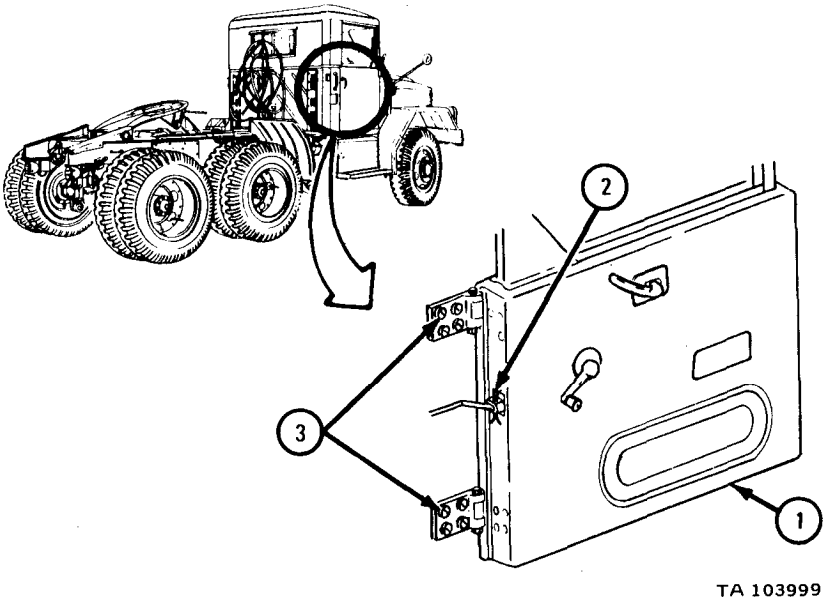

b. Disassembly.

FRAME 1

1. Take out two screws (1).
2. Pull off outer door handle (2).

GO TO FRAME 2

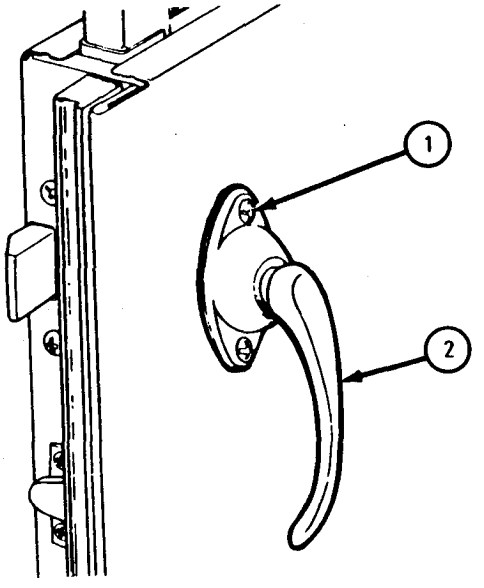

TA 104877

FRAME 2

1. Take out screw (1). Take off inner door handle (2) and washer (3).
2. Take out six screws (4) and take off inspection hole cover (5).

GO TO FRAME 3

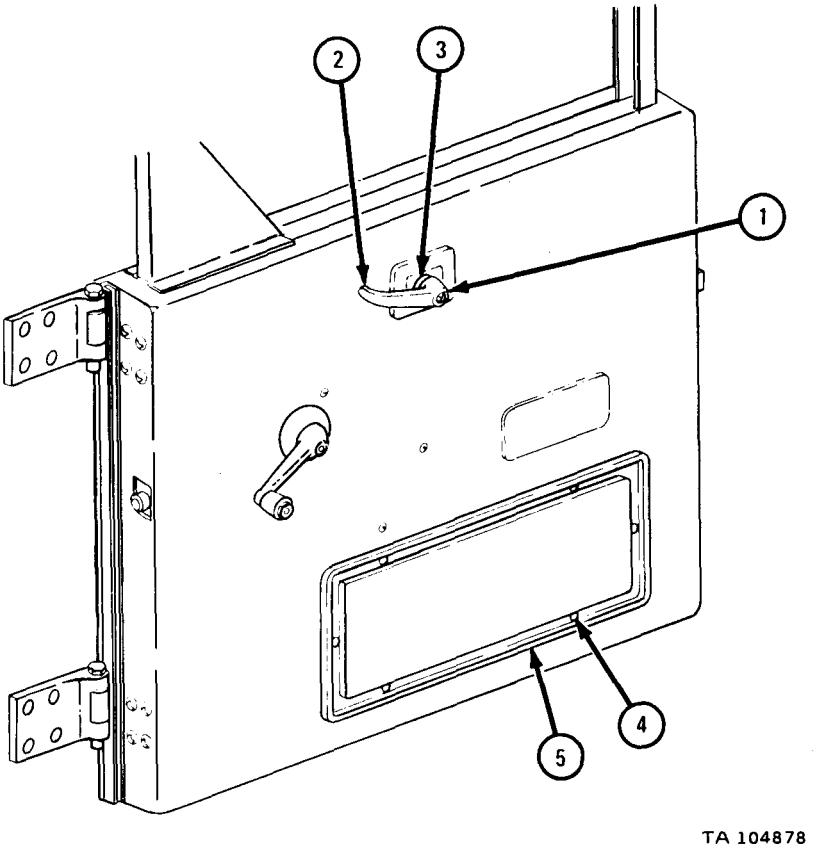

FRAME 3

1. With door glass (1) in down position, pop off two pin fasteners (2).
2. Take out four screws (3) and take off two stop brackets (4).
3. Take door glass regulator assembly guides (5) out of door glass regulator channels (6).
4. Pushing door glass (1) up from bottom, grab door glass frame (7) on top. Take out door glass and door glass frame.

GO TO FRAME 4

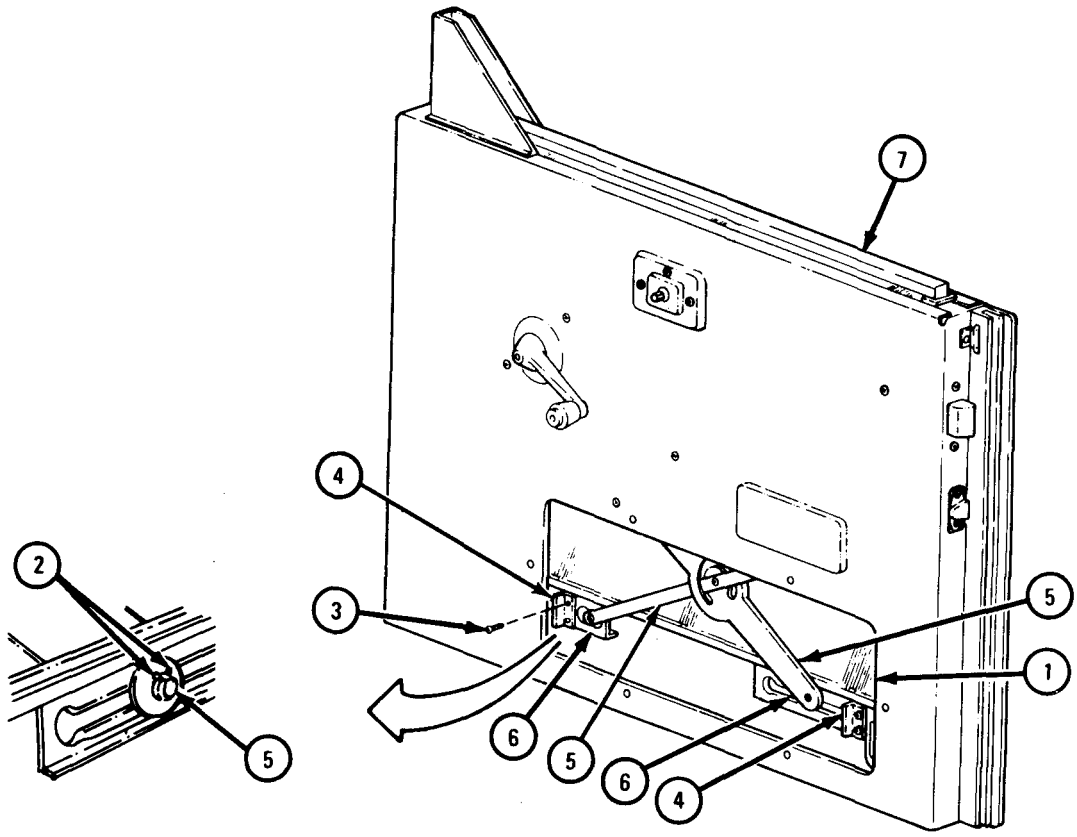

FRAME 4

1. Take out screw (1).
2. Take off door glass regulator handle (2) and washer (3).

GO TO FRAME 5

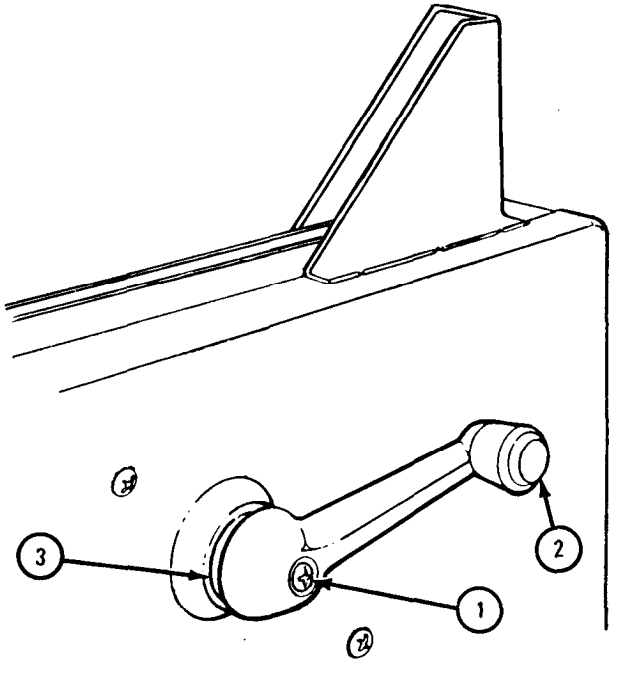

TA 104880

FRAME 5

1. Reaching through inspection hole (1), hold door glass regulator assembly (2).
2. Take out four screws (3).
3. Slide regulator arm (4) out of channel (5) and take door glass regulator assembly (2) through inspection hole (1).

GO TO FRAME 6

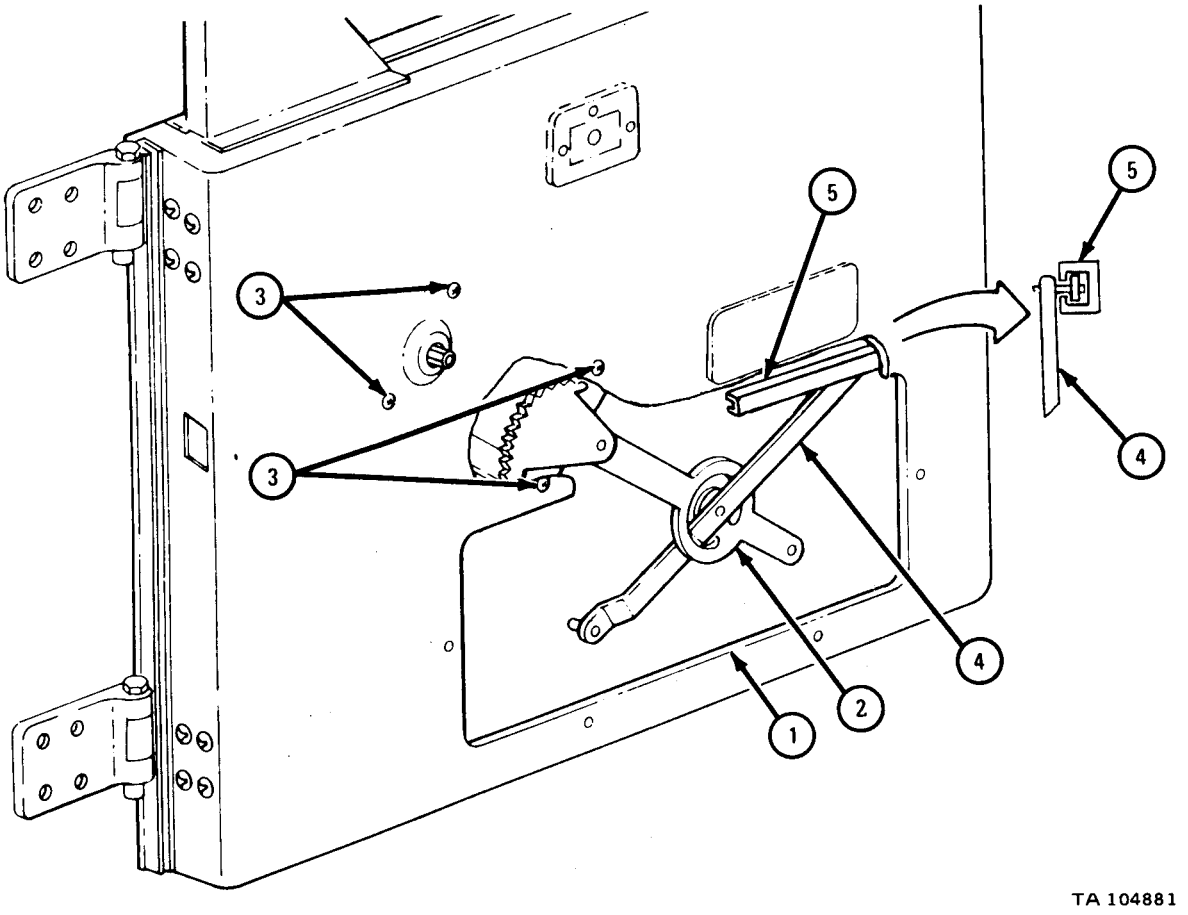

FRAME 6

1. Take out three screws (1).
2. Reaching through inspection hole (2), hold door lock assembly (3). Take out three screws (4) and take out door lock assembly through inspection hole.
3. Take out two screws (5) and take off male dovetail (6) and shim (7).

GO TO FRAME 7

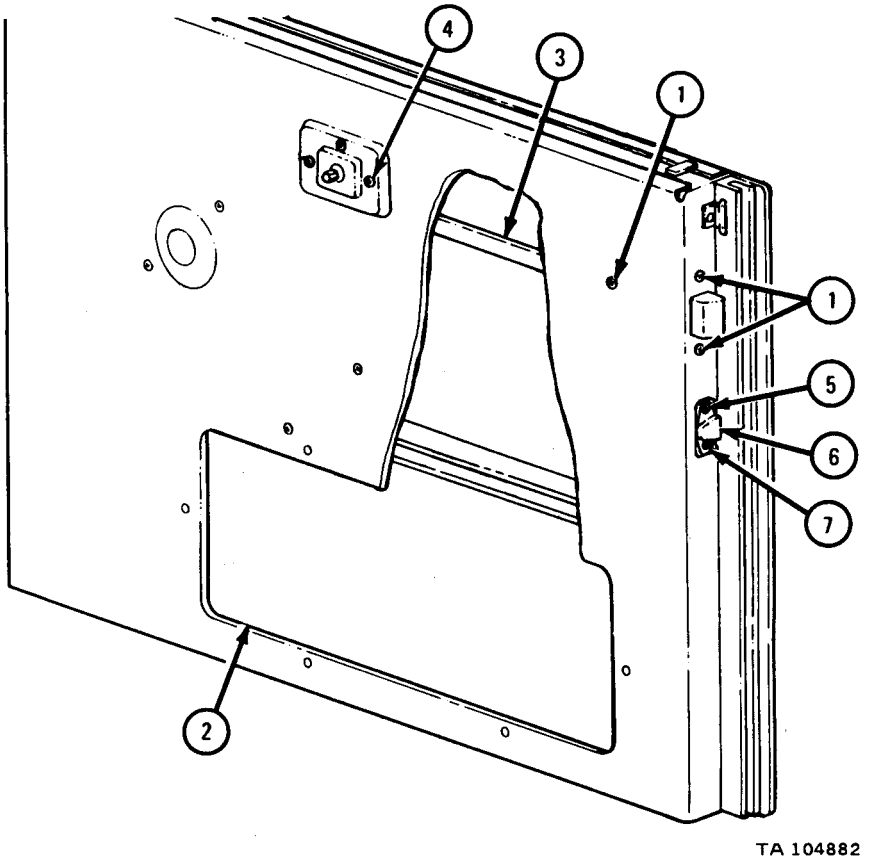

FRAME 7

1. Take out eight screws (1).
2. Take out two hinges (2).

GO TO FRAME 8

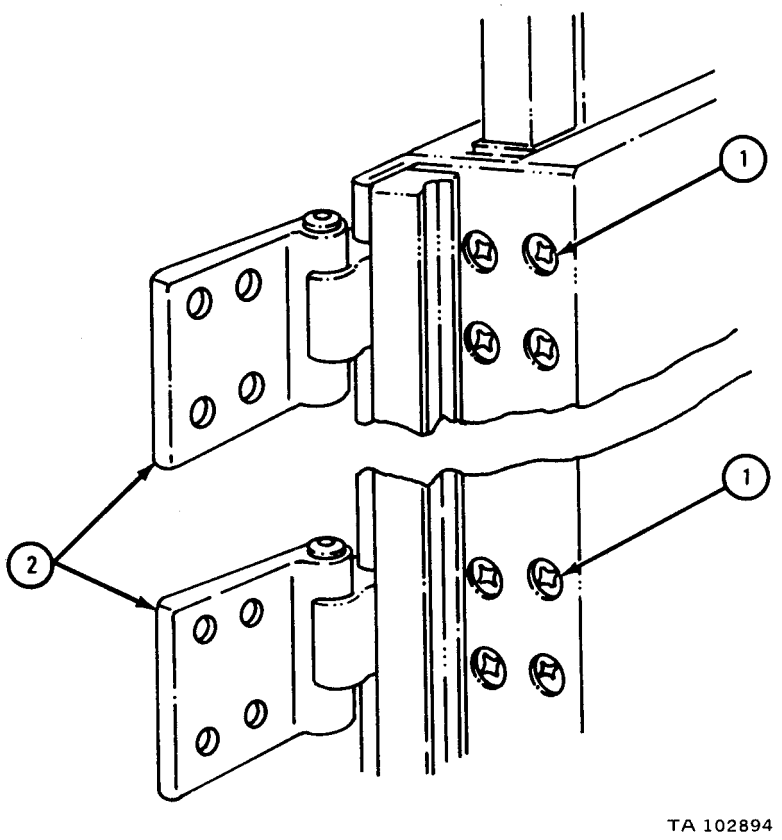

FRAME 8

1. Take out four screws (1).
2. Spread sides of door glass frame (2). Pry out door glass regulator channel (3) and take out door glass regulator channel seal (4).
3. Take out filler strip (5).

GO TO FRAME 9

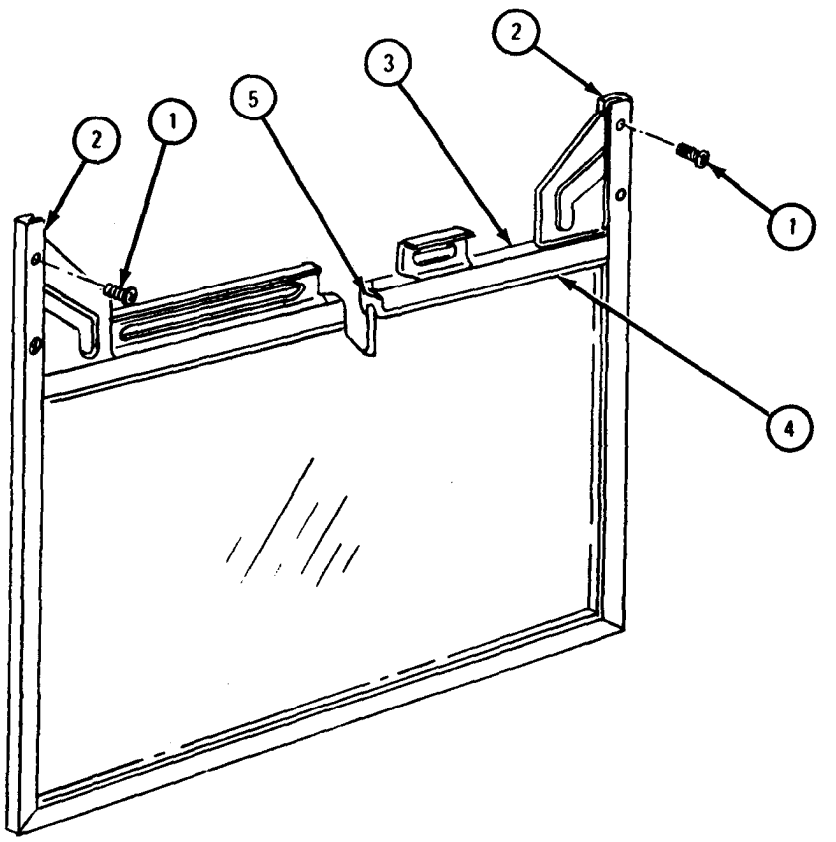

TA 102895

FRAME 9

WARNING

Always wear leather gloves when handling glass. Broken or sharp edges can cause serious injury to personnel.

1. Holding glass (1) and frame (2) at points A and B, take out glass by tapping ends of frame on block of wood (3).
2. Take off and throw away door glass seal (4).

GO TO FRAME 10

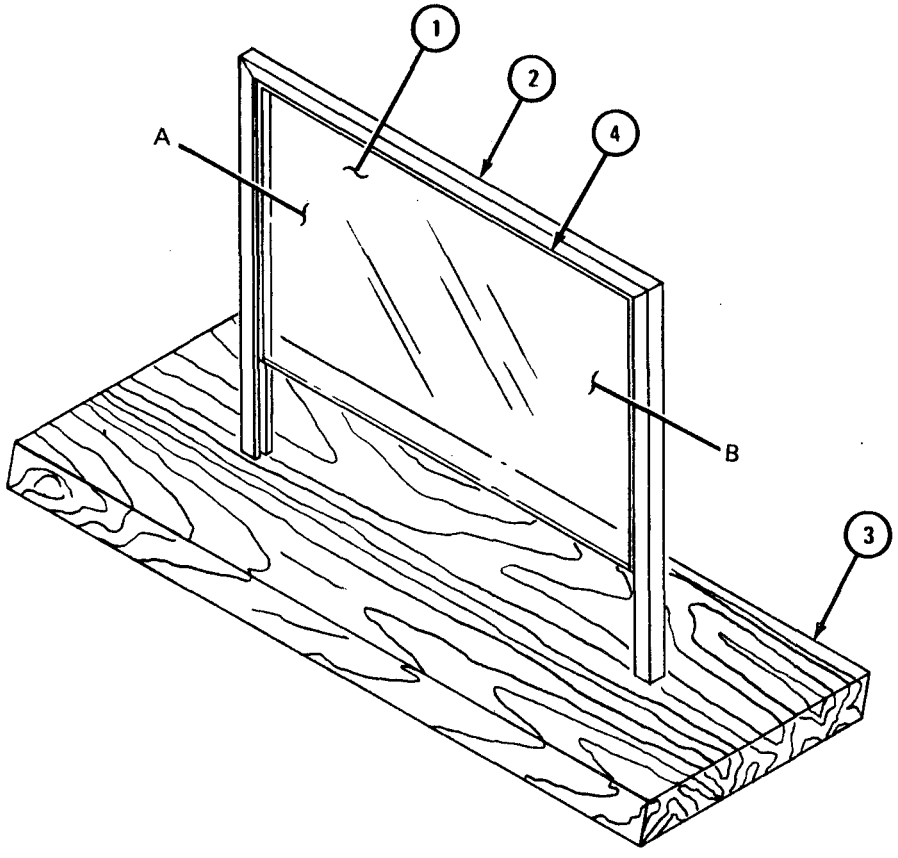

TA 102896

FRAME 10

1. Take out five screws (1).
2. Take off five door weather seal clips (2).
3. Take off two weather seals (3) on back and bottom edge of door (4).
4. Take off weather seal (5) on front edge of door. (6).

GO TO FRAME 11

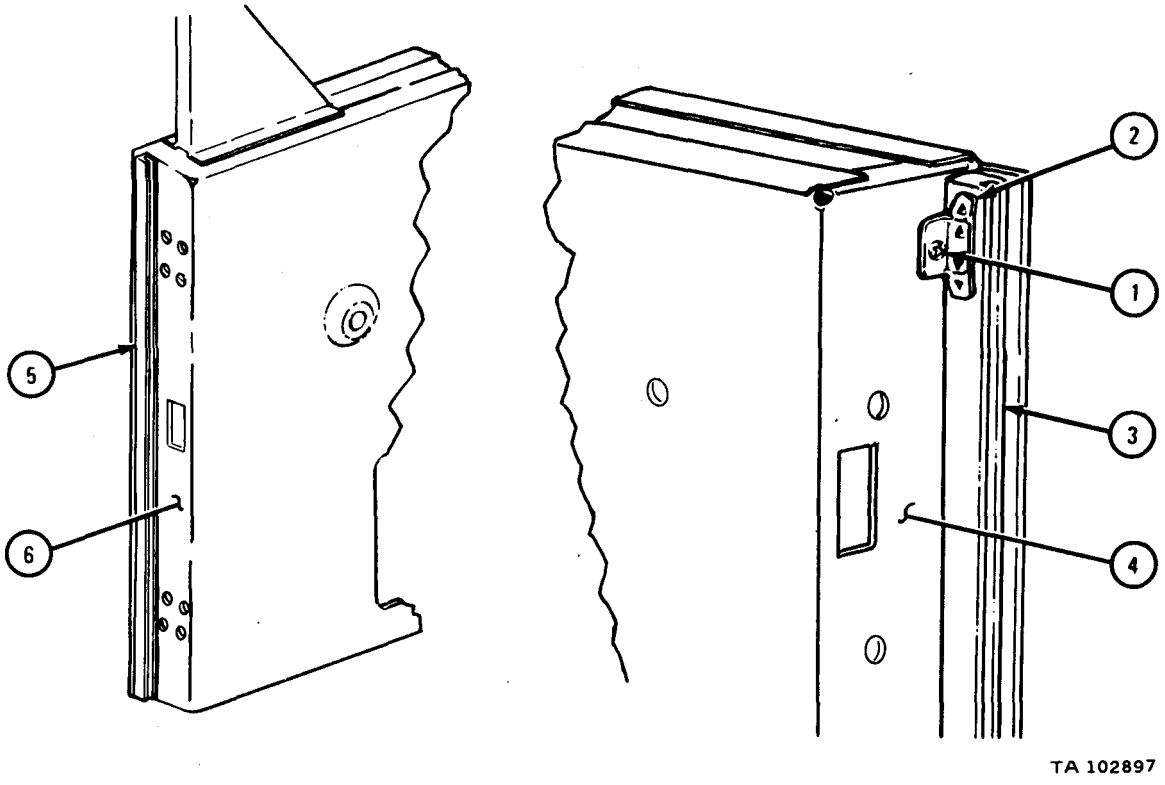

FRAME 11

1. Drill out rivet (1).
2. Working through inspection hole (2), lift front glass run channel (3) with retaining clip (4) up and out of retaining bracket (5).
3. Slide front glass run channel (3) up and out top of door (6).

GO TO FRAME 12

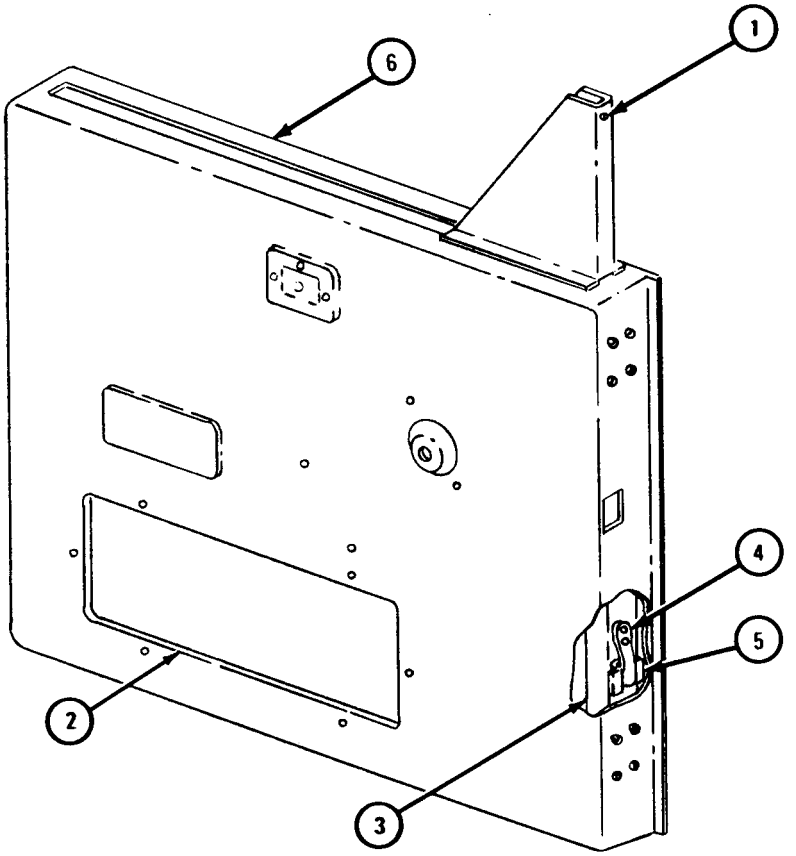

TA 102898

FRAME 12

1. Working through inspection hole (1), take out screw (2).
2. Lift rear glass run channel (3) with retaining clip (4) out of retaining bracket (5) and out top of door (6).

END OF TASK

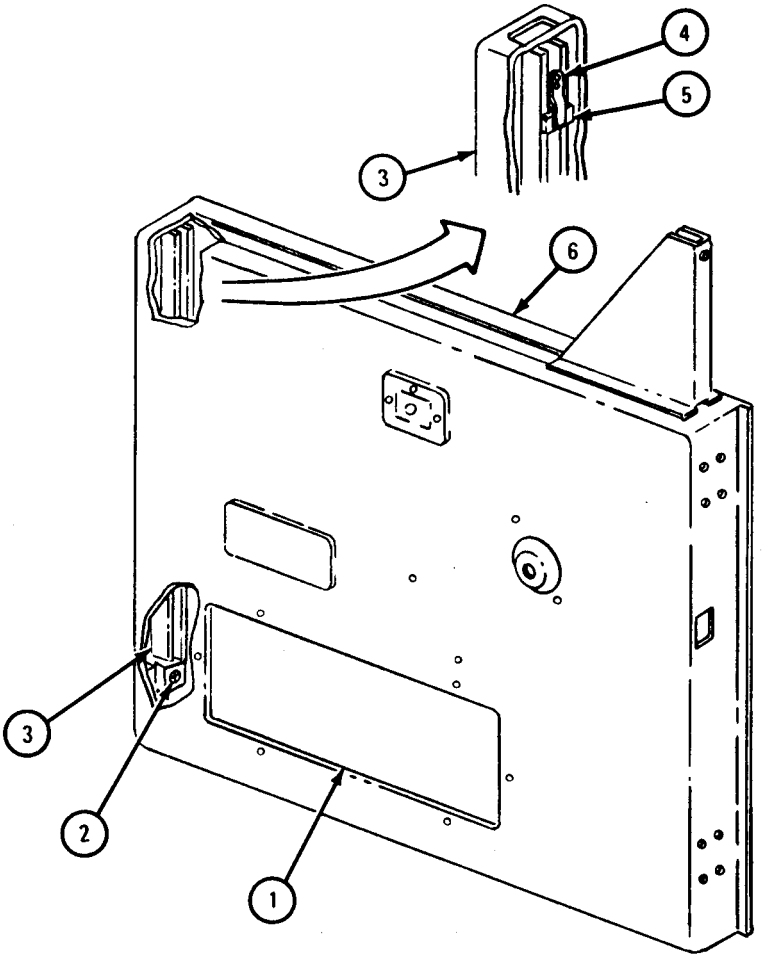

TA 102899

c. Cleaning. There are no special cleaning procedures needed. Refer to cleaning procedures given in Part 1, para 1-3.

d. Inspection.

FRAME 1

1. Check that door glass regulator (1), door hinges (2), door lock assembly (3), and male dovetail (4) work correctly.
2. Check that door glass (5) is not cracked or chipped and that layers are not coming apart.
3. Check that frame (6), three channels (7), two seals (8), filler strip (9), and weather seal (10) are not worn or damaged.

GO TO FRAME 2

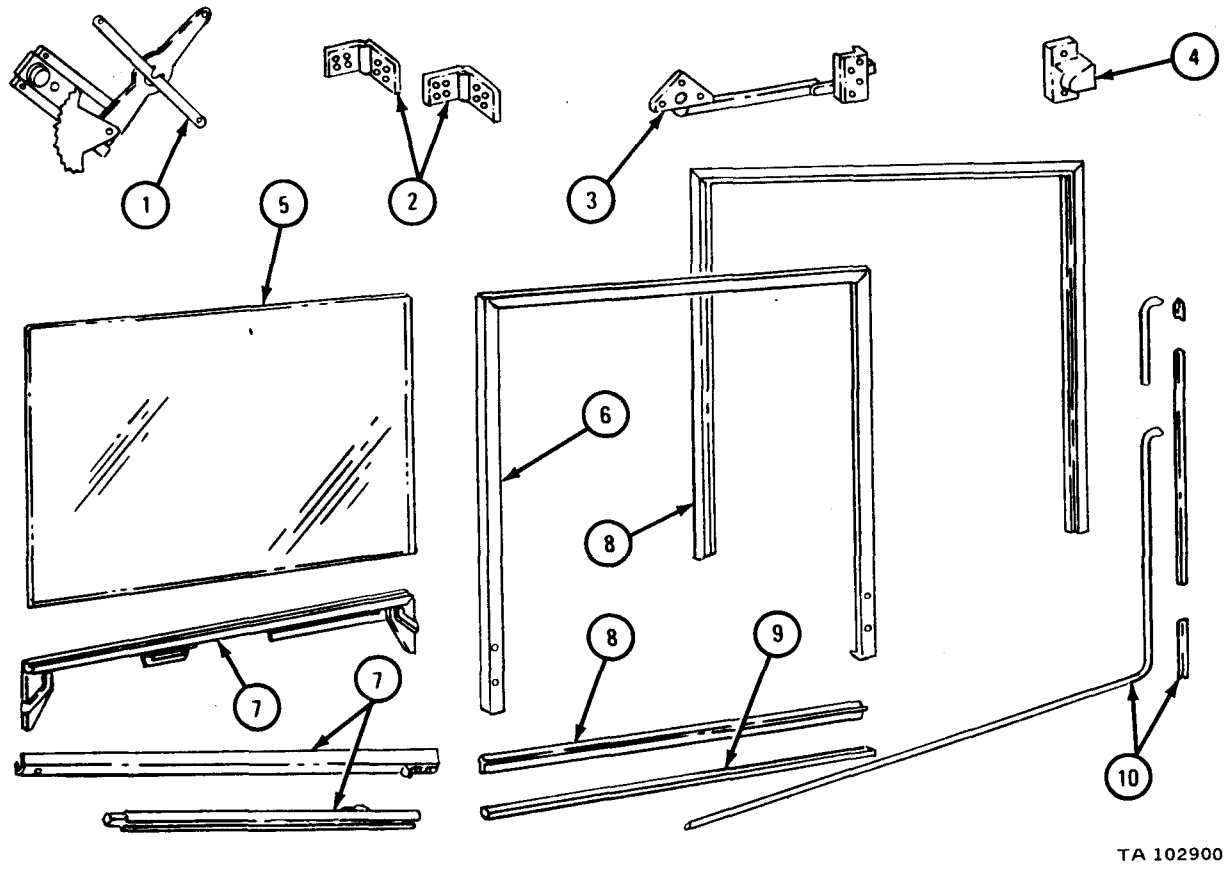

FRAME 2

1. Check that door latch assembly (1) is not damaged.
2. Check that outside door handle (2) is not damaged.
3. Check that lock handle (3) is not damaged.
4. Check that inspection hole cover (4) fits correctly and is not damaged.
5. Check that cab door (5) is not damaged.

END OF TASK

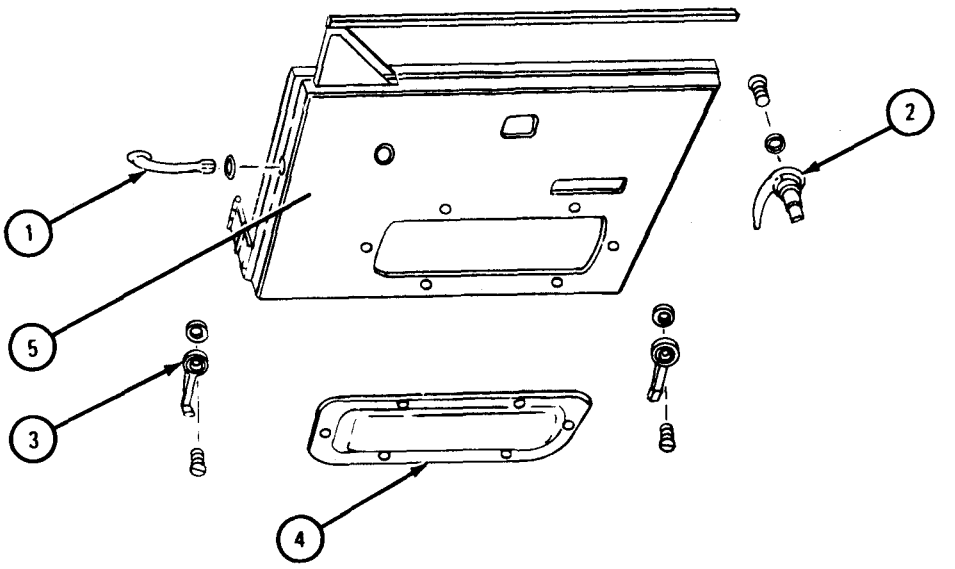

NOTE
CHECK ONLY THOSE PARTS WHICH ARE CALLED OUT. PARTS WITHOUT CALLOUTS ARE SHOWN ONLY FOR REFERENCE PURPOSES.

TA 102901

e. Repair.

(1) If door assembly is damaged, refer to FM 43-2 for repair of sheet metal parts.

(2) Throw away all other damaged parts and get new ones.

f. Assembly.

FRAME 1

1. Put front glass run channel (1) in through top of door (2).
2. Working through inspection hole (3), put retaining clip (4) in retaining bracket (5).
3. Put in rivet (6).

GO TO FRAME 2

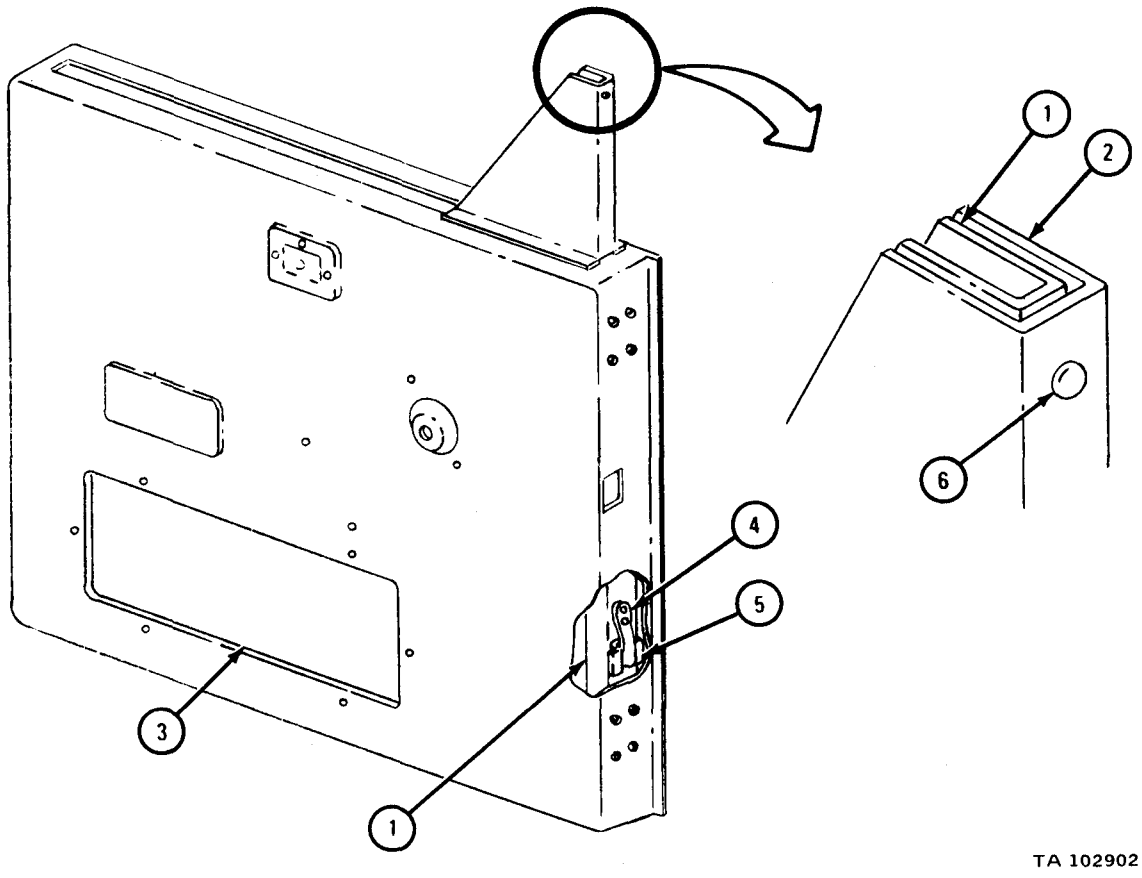

FRAME 2

1. Put rear glass run channel (1) in through top of door (2) and put retaining clip (3) in retaining bracket (4).
2. Working through inspection hole (5), put in screw (6).

GO TO FRAME 3

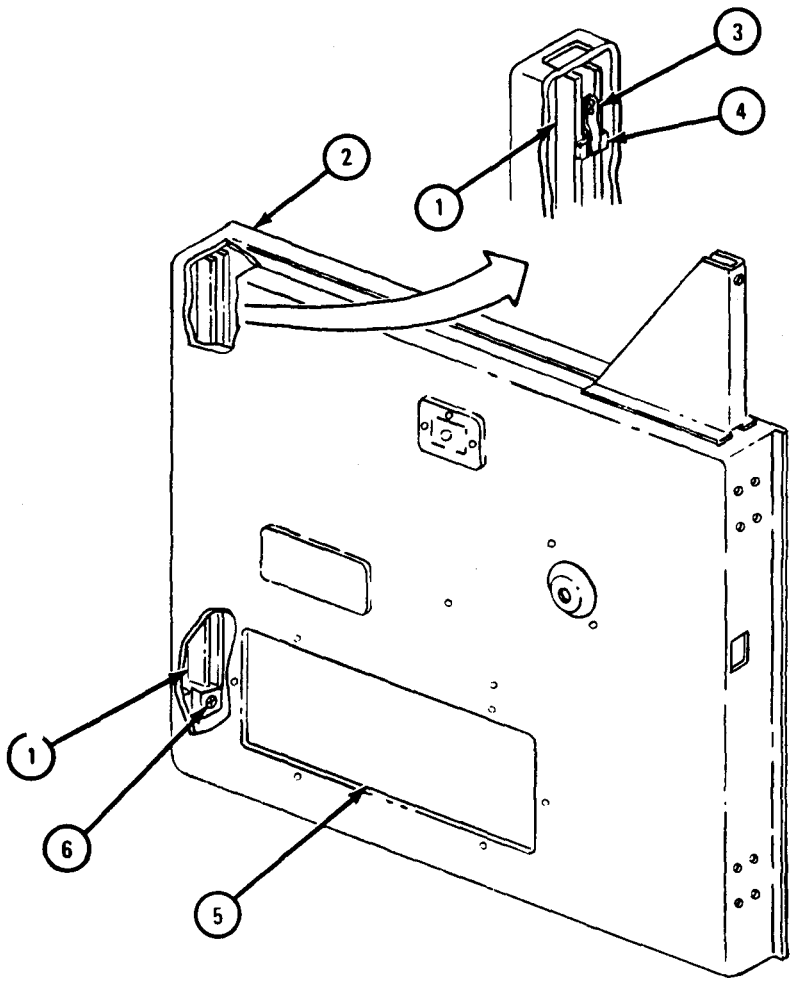

TA 102903

FRAME 3

WARNING

Rubber cement is flammable. Do not use near an open flame. Keep a fire extinguisher nearby when rubber cement is used. Use only in well-ventilated places. Failure to do this may result in injury to personnel and damage to equipment.

1. Put rubber cement on back and bottom edges of door (1).
2. Put weather seal (2) in place around back and bottom edges of door (1).
3. Put five weather seal clips (3) in place on back and bottom of door (1). Put in five screws (4).
4. Put rubber cement on front edge of door (5).
5. Put weather seal (6) in place on front edge of door (5).

GO TO FRAME 4

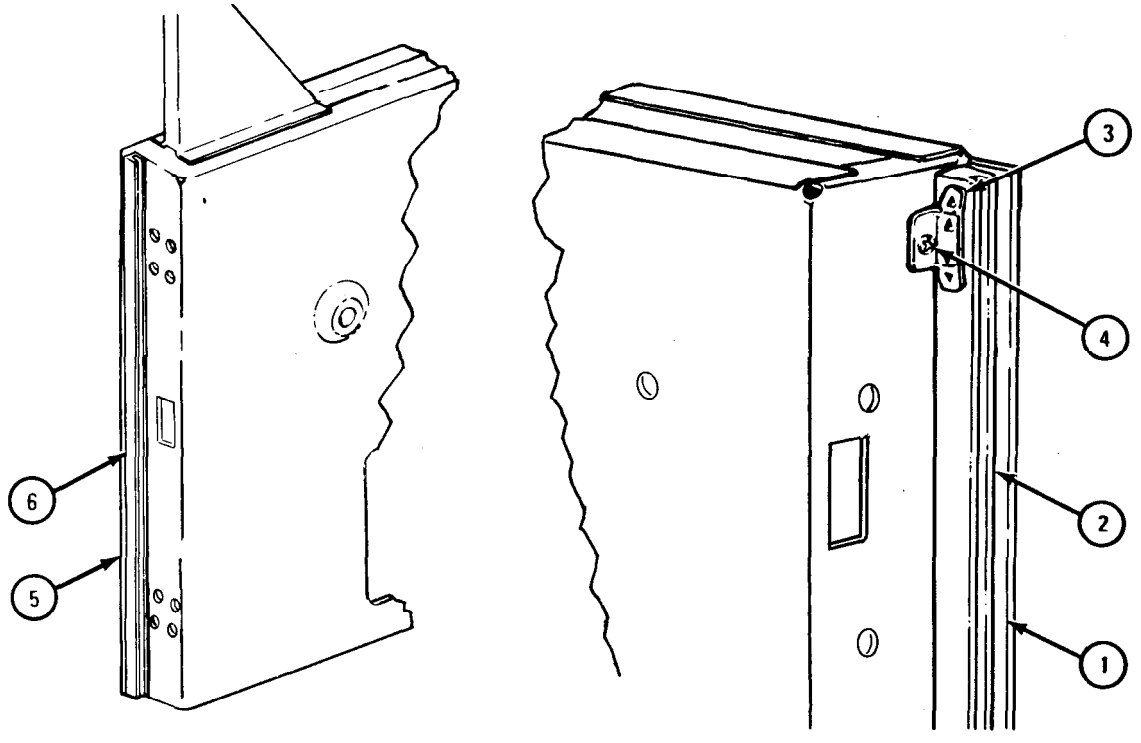

TA 102904

FRAME 4

WARNING

Always wear leather gloves when handling glass. Broken or sharp edges can cause serious injury to personnel.

1. Put door glass frame seal (1) around three sides of door glass (2).
2. Put soapy water into frame channel (3) and on outside of glass frame seal (1).
3. Push door glass (2) with seal (1) all the way into door glass frame (3).
4. Put door glass regulator channel seal (4) in place on door glass (2).
5. Put filler strips (5) in regulator channel (6).

NOTE

Make sure filler strip (5) does not fall out or get damaged when putting on regulator channel (6).

6. Put soapy water into regulator channel (6) and on outside of regulator channel seal (4). Push regulator channel onto door glass (2) until screw holes aline.
7. Put in four screws (7).

GO TO FRAME 5

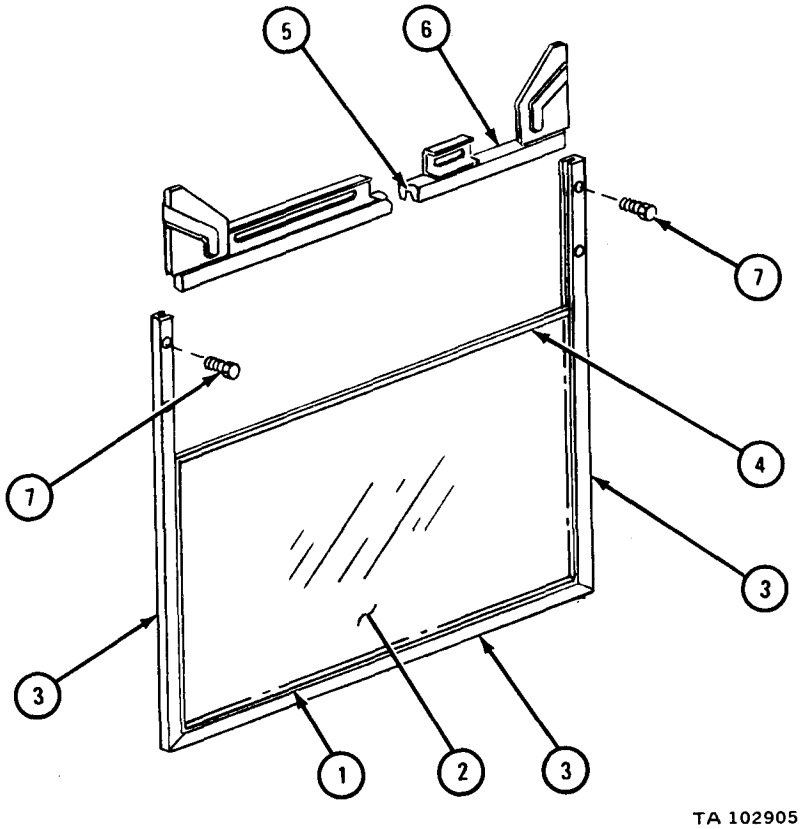

FRAME 5

1. Aline holes in door assembly (1) with holes in two hinges (2).
2. Put in eight screws (3).

GO TO FRAME 6

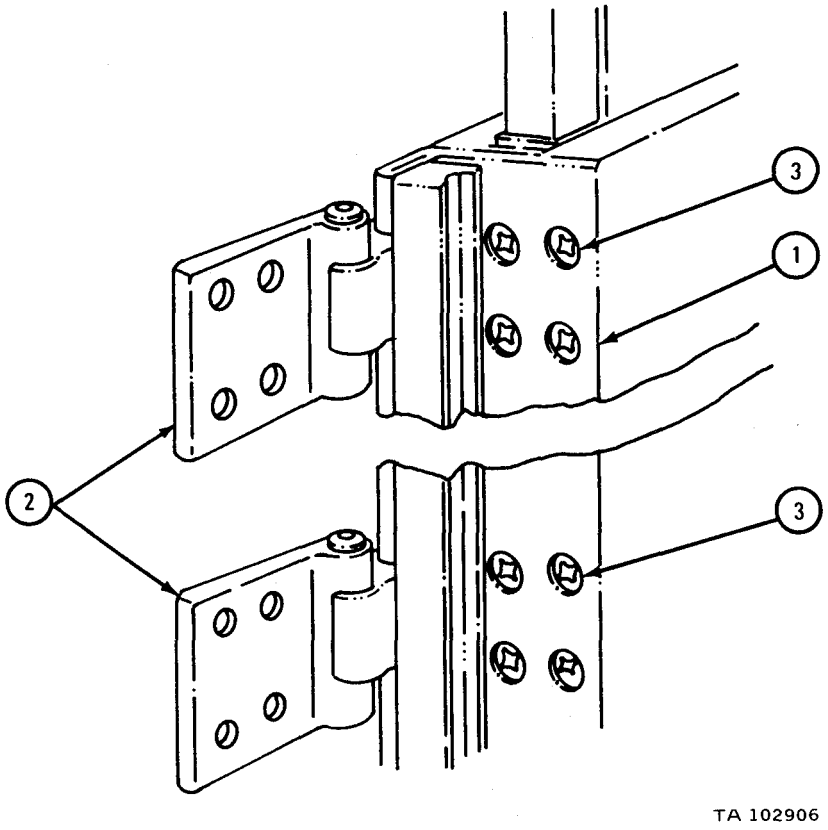

FRAME 6

1. Working through inspection hole (1), hold door lock assembly (2) in place.
2. Put in six screws (3).
3. Put male dovetail and shim (4) in place.
4. Put in two screws (5).

GO TO FRAME 7

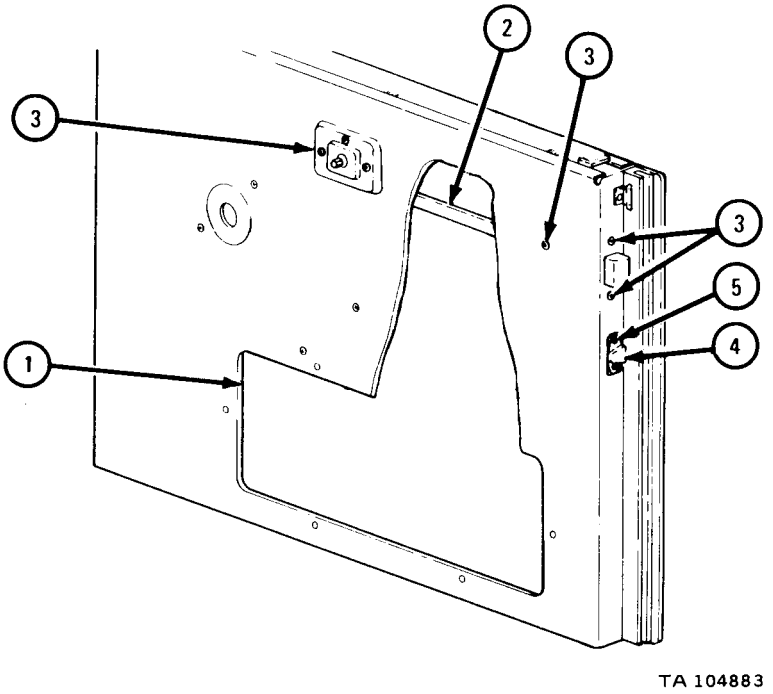

FRAME 7

NOTE

Make sure regulator arm guides are alined inside door channel.

1. Working through inspection hole (1), slide regulator arm (2) into channel (3) and put regulator assembly (4) in place, alining holes.
2. Put in four screws (5).

GO TO FRAME 8

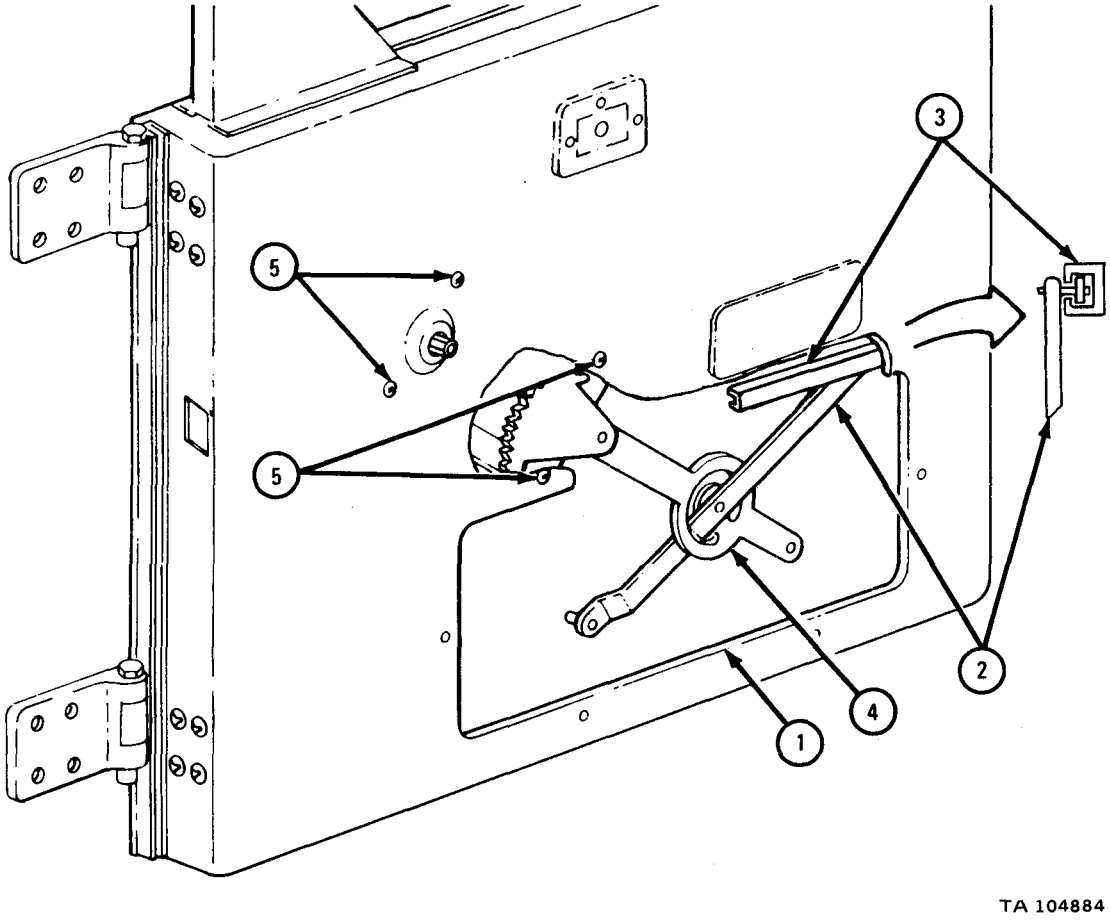

FRAME 8

1. Put washer (1) and door regulator handle (2) on door assembly.
2. Put in screw (3).

GO TO FRAME 9

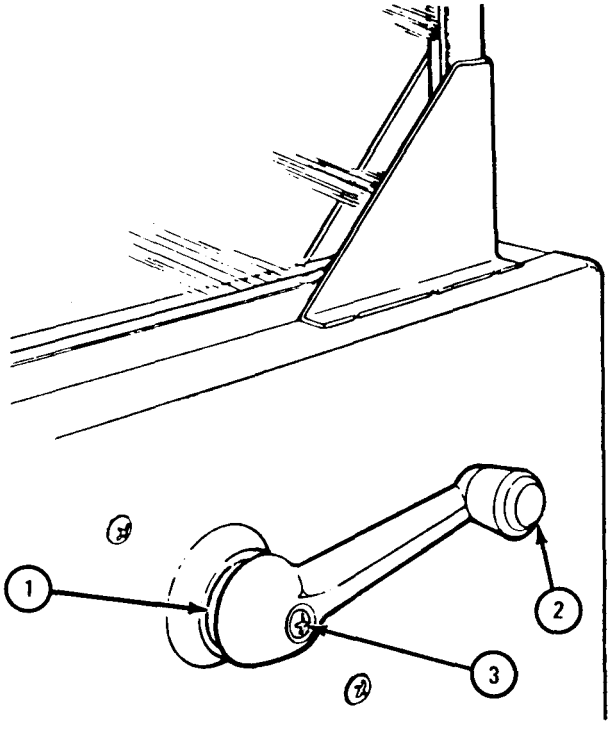

TA 104885

FRAME 9

1. Slide door glass with door glass frame (1) down into door assembly (2).
2. Put door glass regulator assembly guides (3) in door glass regulator channel (4) as shown and push on two fasteners (5).
3. Put two stop brackets (6) in place, alining holes.
4. Put in four screws (7).

GO TO FRAME 10

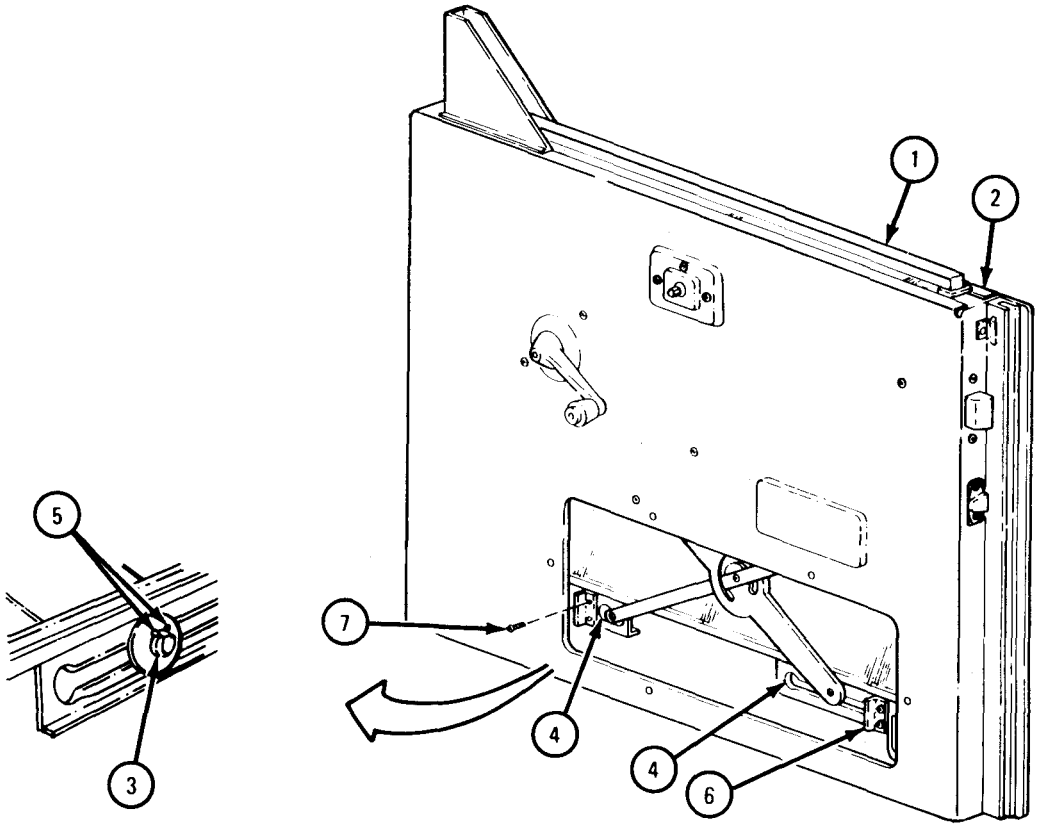

TA 104886

FRAME 10

1. Put inspection hole cover (1) in place.
2. Put in six screws (2).
3. Put washer (3) and inner door handle (4) in place.
4. Put in screw (5).

GO TO FRAME 11

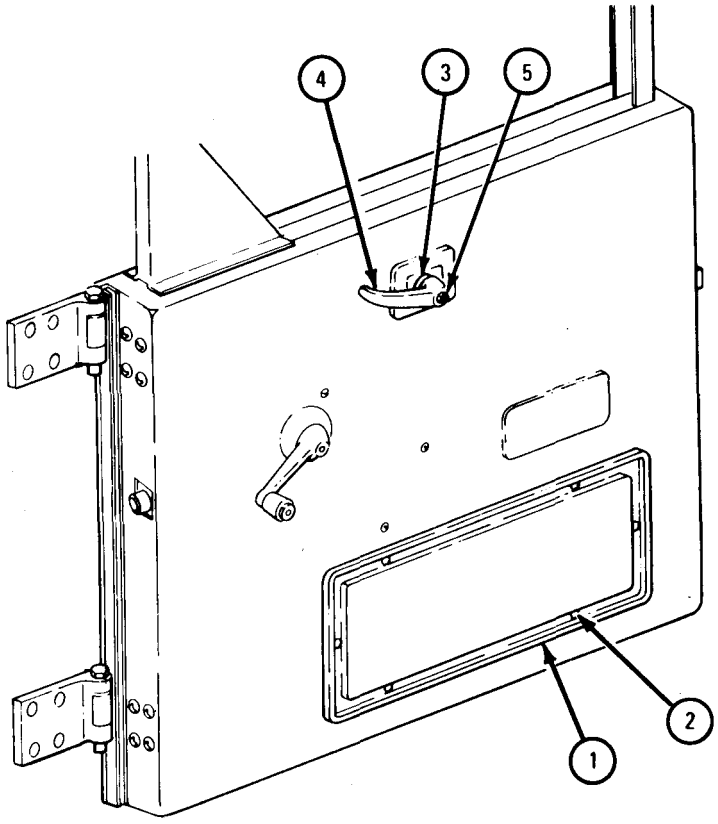

TA 104887

FRAME 11

1. Put outer door handle (1) in place.
2. Put in two screws (2).

END OF TASK

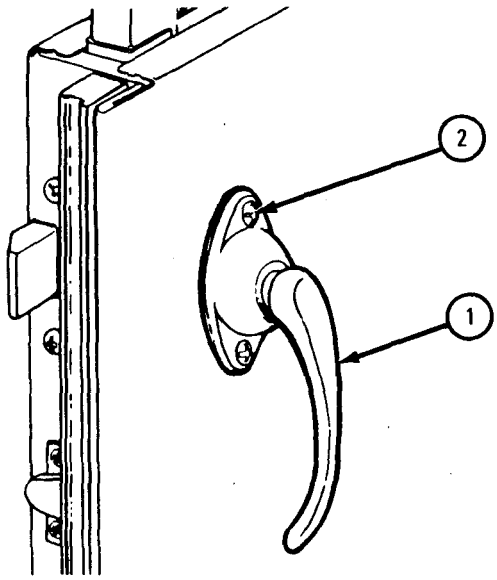

TA 104888

g. Replacement.

FRAME 1

Soldiers A and B	1.	Put door (1) in place and aline screw holes.
Soldier A	2.	Hold door (1) in place.
Soldier B	3.	Put in eight screws (2).
	4.	Aline hole in door stop (3) with hole in door (1). Put in cotter pin (4).

END OF TASK

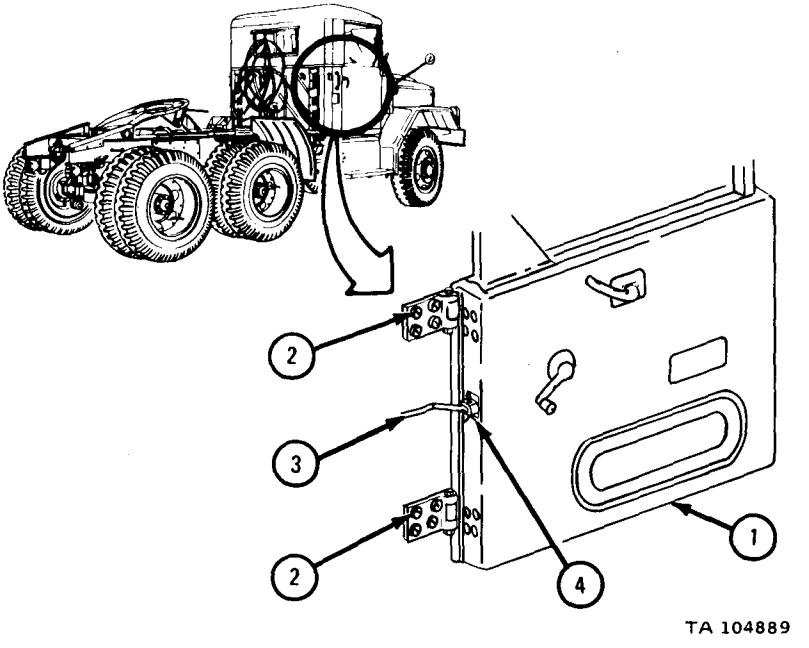

Section III. FENDERS, RUNNING BOARDS, AND WINDSHIELD ASSEMBLY

17-7. FRONT FENDER REMOVAL, REPAIR, AND REPLACEMENT.

NOTE

This task is the same for left and right front fenders except as noted.

TOOLS: No special tools required

SUPPLIES: Solvent, dry cleaning, type II (SD-2), Fed. Spec P-D-680
Clean rags

PERSONNEL: Two

EQUIPMENT CONDITION: Truck parked, engine off, handbrake set.

a. Preliminary Procedures.

(1) Open hood. Refer to TM 9-2320-209-10.

(2) If working on right fender of truck with exhaust stack, remove exhaust stack. Refer to TM 9-2320-209-20.

(3) If working on left fender of truck and truck has personnel hot water heater, remove personnel hot water heater, Refer to TM 9-2320–209-20.

(4) If working on left fender, and truck has vehicular compartment heater, remove vehicular compartment heater and exhaust tube. Refer to TM 9–2320-209-20.

(5) If working on right fender, remove air cleaner intake hood. Refer to TM 9-2320-209-20.

(6) If working on right fender and vehicle is equipped with an engine compartment heater, remove clamp holding heater control wire and push wire out of way. Refer to Hot Water Personnel Heater Blower Motor Repair, TM 9-2320-209-20.

(7) If working on right fender, remove hood right side panel. If working on left fender, remove hood left side panel. Refer to TM 9-2320-209-10.

b. Removal.

NOTE

Except where noted, removal and replacement procedures for the left and right fenders are the same.

FRAME 1

1. Take out four screws (1) and four self-locking nuts (2).

NOTE

Tag three leads (3) and three leads on light assembly (4) so they can be put back in the same place.

2. Take three leads (3) off light assembly (4).

3. Take off light assembly (4) and protector box (5).

IF WORKING ON LEFT FENDER, GO TO FRAME 2.
IF WORKING ON RIGHT FENDER, GO TO FRAME 3

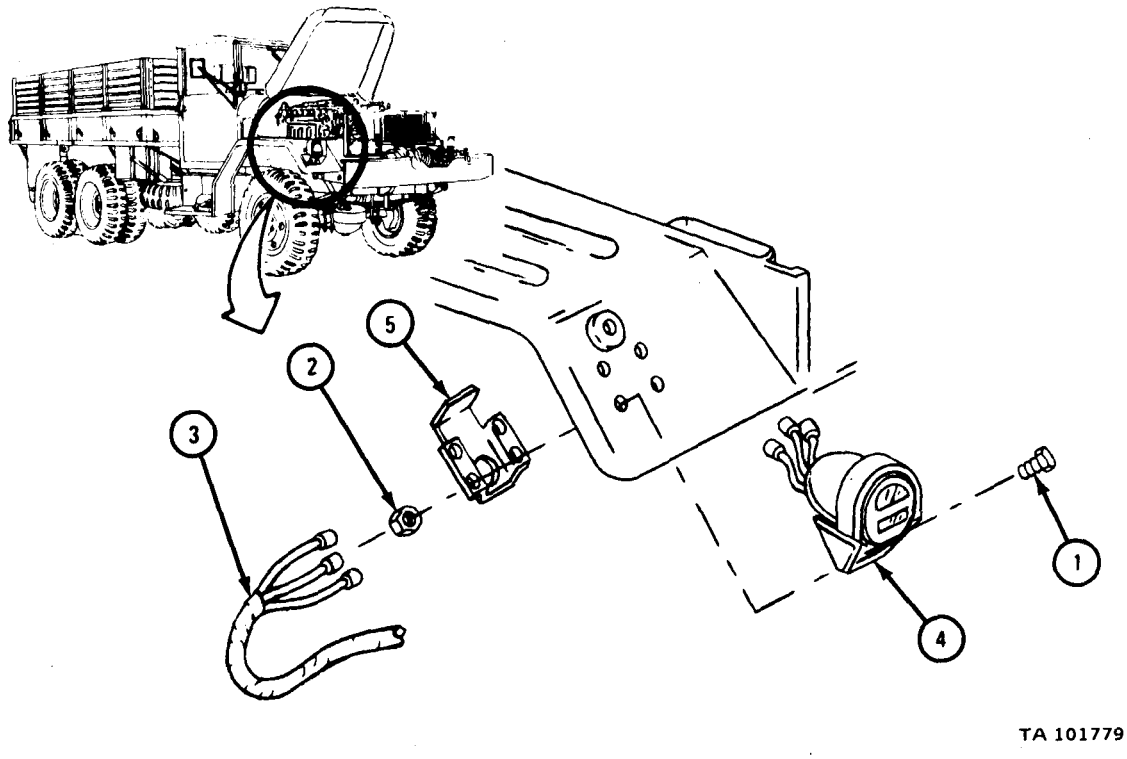

FRAME 2

Soldier A 1. Working inside the engine compartment, hold two nuts (1).

Soldier B 2. Working under fender, take out two screws (2).

Soldier A 3. Working inside the engine compartment, take off regulator (3) with ground lead (4). Tape regulator (3) to steering column (5).

4. Take out screw (6) from fender support (7).

5. Hold two screws (8) at lamp support bracket filler panel (9).

Soldier B 6. Working under fender, take off two nuts (10).

Soldier A 7. Take out two screws (8).

GO TO FRAME 4

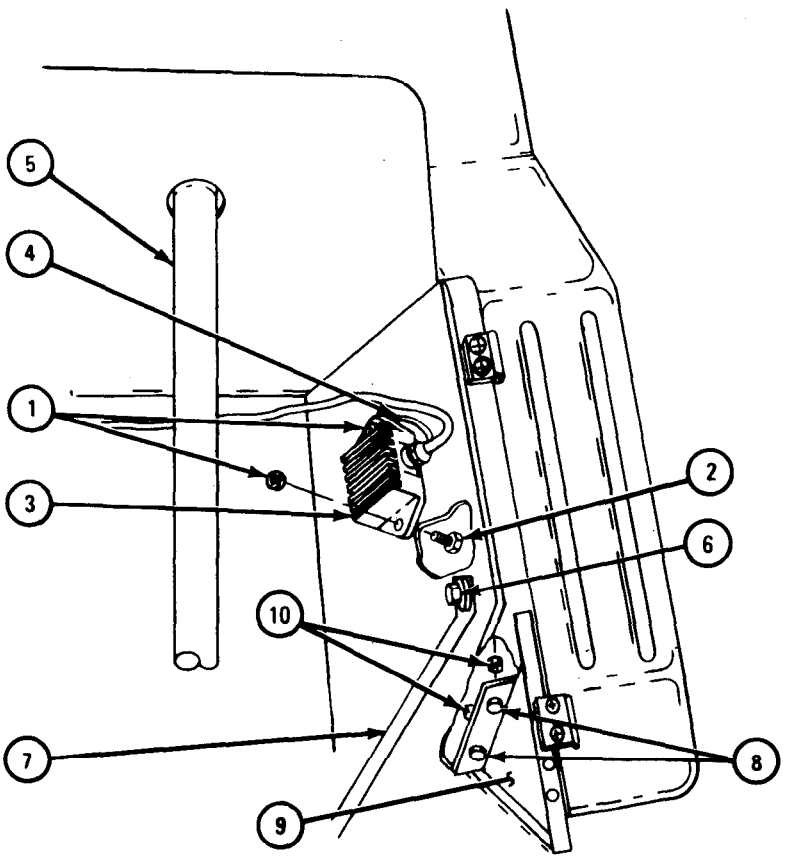

TA 101780

FRAME 3

Soldier A 1. Take out screw (1) from bracket (2).

2. Take out screw with self-locking nut (3) from clamp (4).

3. Take out screw (5) from horn support (6) and move horn (7) out of the way.

4. Hold two screws (8) at lamp support bracket filler panel (9).

Soldier B 5. Working under fender, take off two nuts (10).

Soldier A 6. Take out two screws (8).

GO TO FRAME 4

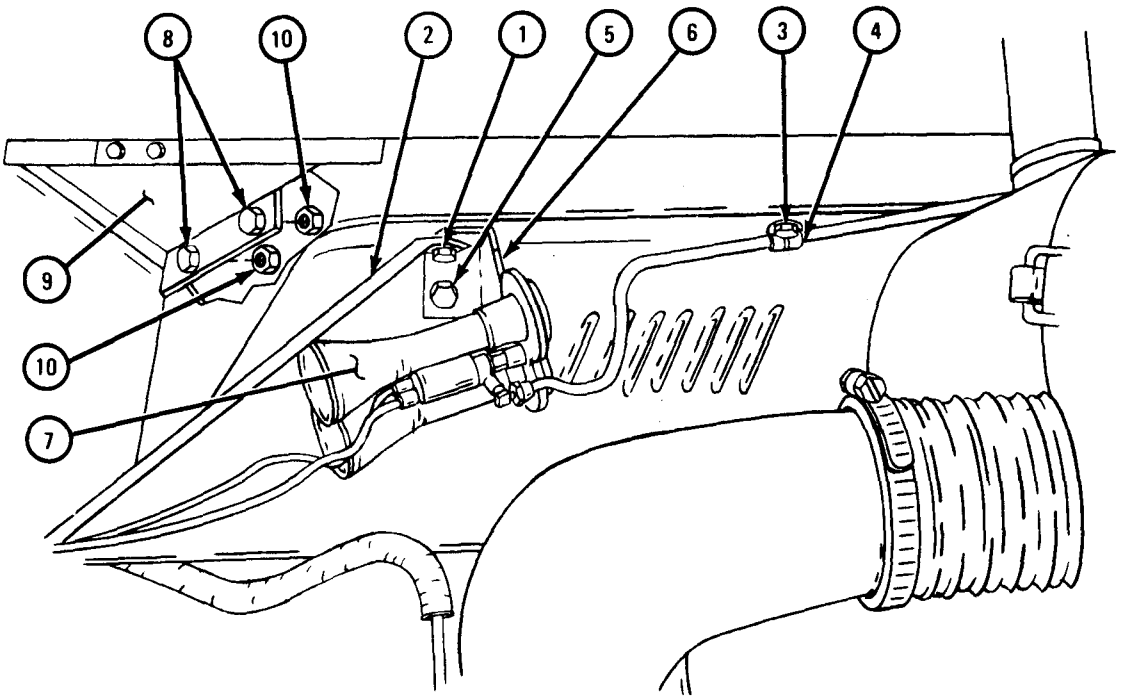

TA 101781

FRAME 4

1. Take out three screws and assembled washers (1) from fender (2).
2. Take out antisqueak material (3).
3. Take out screw and washer (4) from fender splash apron (5) to cab floor rail (6).

GO TO FRAME 5

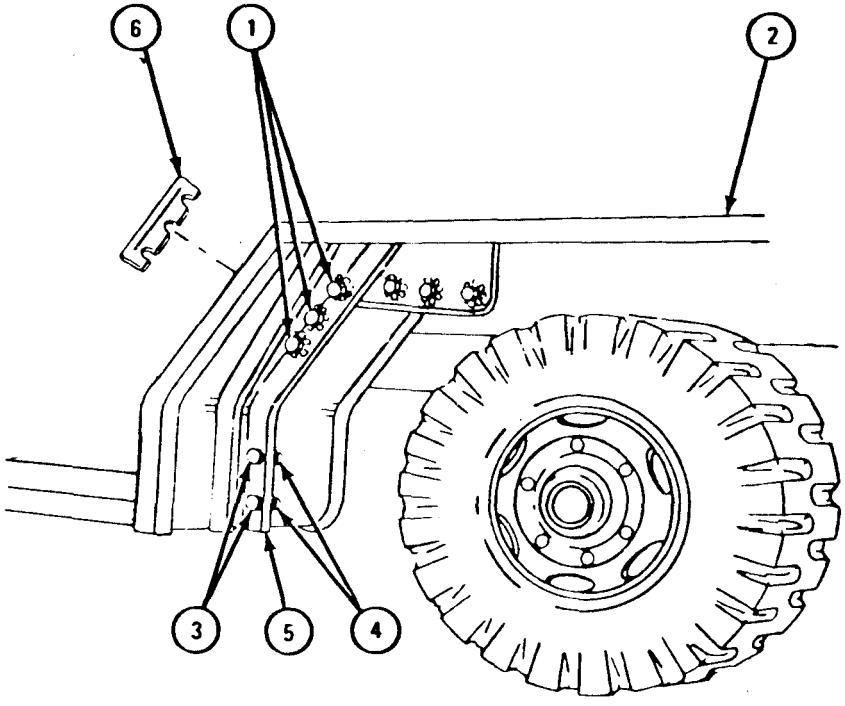

TA 101776

FRAME 5

Soldier A 1. Working under front of fender (1), hold three nuts (2).

Soldier B 2. Working between fender and bumper, take out three screws (3) from lamp support bracket (4).

GO TO FRAME 6

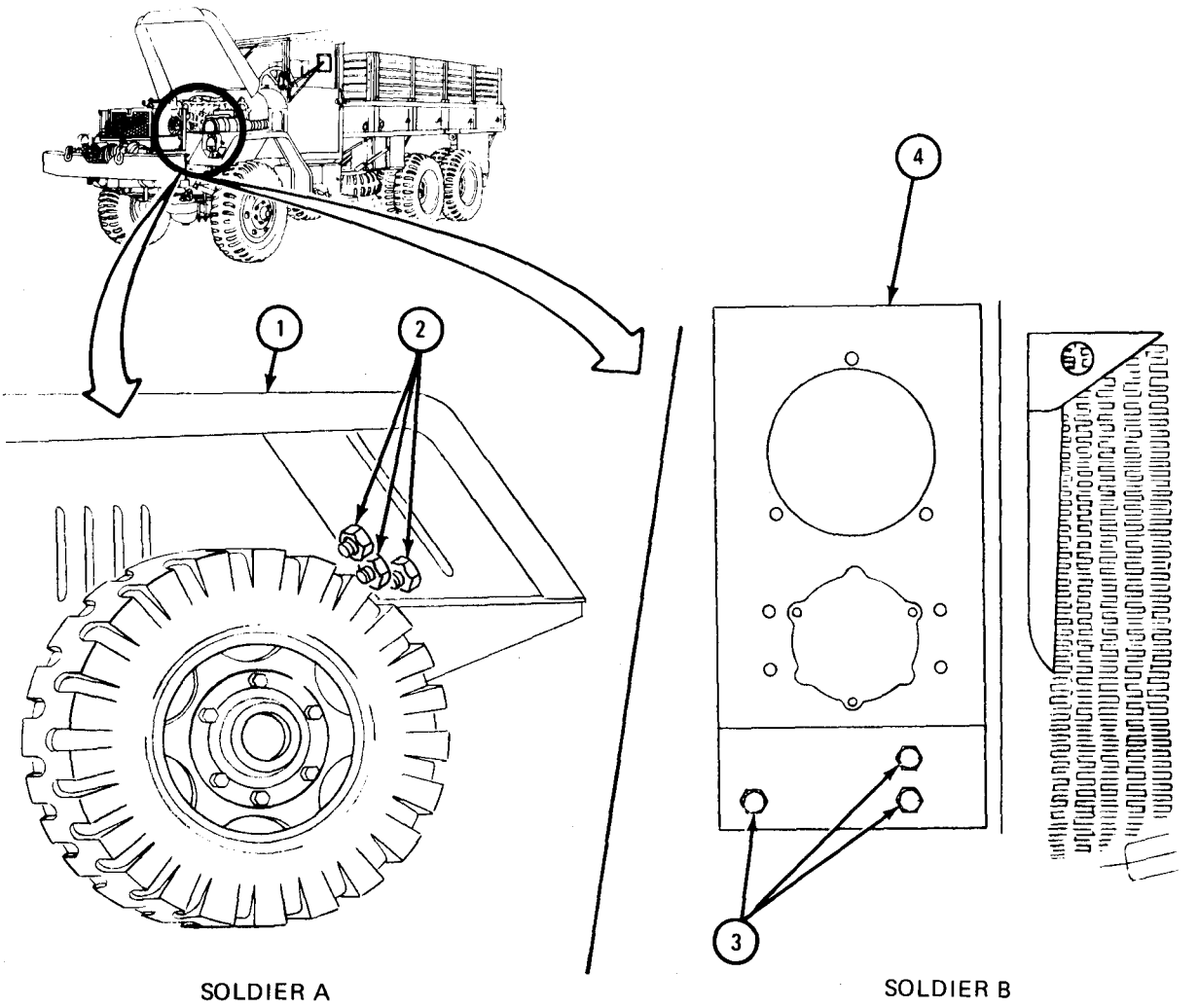

FRAME 6

1. Take off two nuts (1) and take out two screws (2).
2. Pull wiring harness (3) down and out of fender brace (4).
3. Take off three safety nuts (5).
4. Take out three bolts (6), six flat washers (7), three fender mounting springs (8), and three flat washers (9).
5. Take off fender mount spacer (10).

GO TO FRAME 7

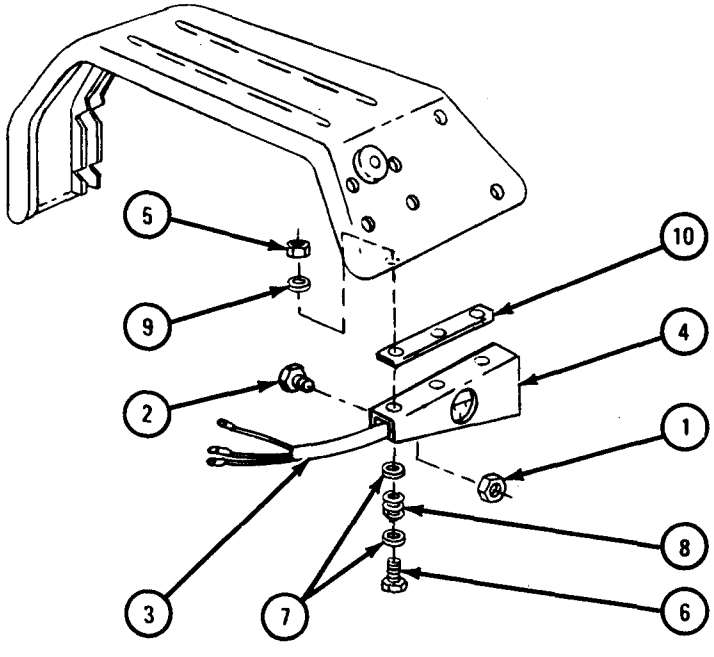

NOTE: PARTS WITHOUT CALLOUTS ARE SHOWN ONLY FOR REFERENCE PURPOSES.

TA 101782

FRAME 7

NOTE

It is necessary to tie the lamp support bracket to the brush guard to prevent the lamp support bracket from falling when the fender is removed.

Soldier A 1. Hold two bolts (1) at fender support bracket (2).

Soldier B 2. Take off two nuts (3).

Soldier A 3. Hold fender (4).

Soldier B 4. Take out two bolts (1).

Soldiers A and B 5. Lift fender (4) off truck.

END OF TASK

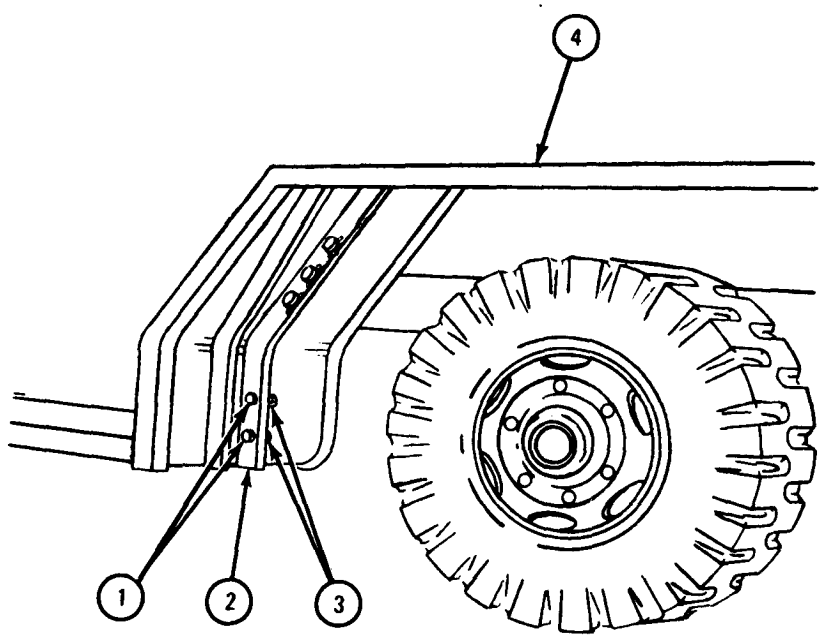

TA 118022

c. Disassembly.

FRAME 1

1. Working under fender (1), hold two nuts with washers (2). Take out two screws (3) and take off butt hinge (4).

END OF TASK

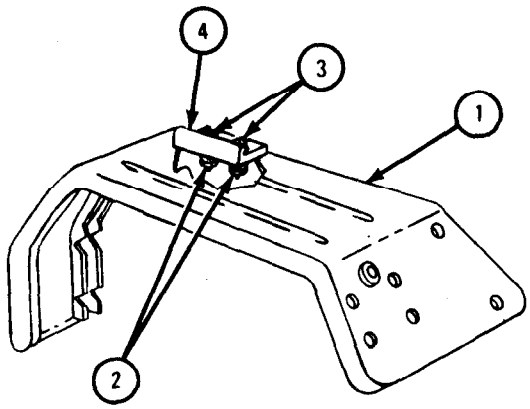

TA 101783

d. Cleaning. There are no special cleaning procedures needed. Refer to cleaning procedures given in Part 1, para 1-3.

e. Inspection and Repair.

(1) Check that fender is not dented or bent. Straighten bends or dents. Refer to FM 43-2.

(2) Check that fender is not cracked or torn and that it has no holes. Weld cracks, tears and holes. Refer to TM 9-237.

(3) If fender needs more repair, get a new one.

f. Assembly.

FRAME 1

1. Put butt hinge (1) on fender (2) and aline screw holes.
2. Put in two screws (3). Put on and tighten two nuts (4) with two washers (5).

END OF TASK

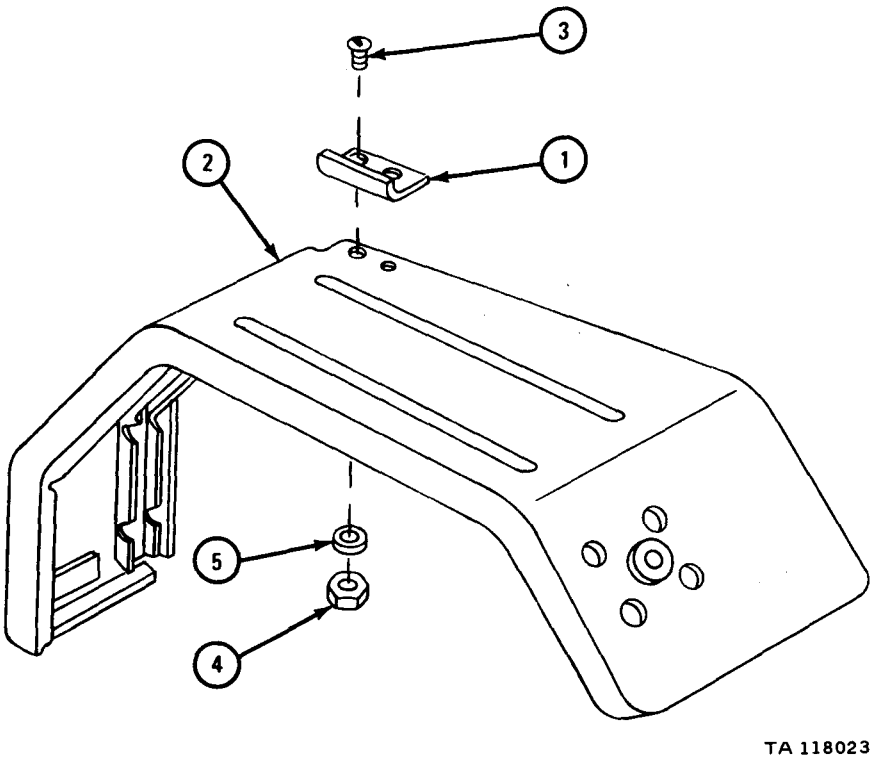

g. Replacement.

FRAME 1

Soldier A 1. Hold fender (1) in place.

Soldier B 2. Put fender mount spacer (2) on fender support (3). Aline three holes in fender (1), fender mount spacer (2), and fender support (3).

3. Put flat washer (4), spring (5), and flat washer (6) on bolt (7).

4. Put bolt (7) through hole in fender support (3), fender mount spacer (2) and fender (1). Put on flat washer (8) and nut (9).

5. Do steps 3 and 4 again for two other bolts.

6. Tighten three nuts (9).

GO TO FRAME 2

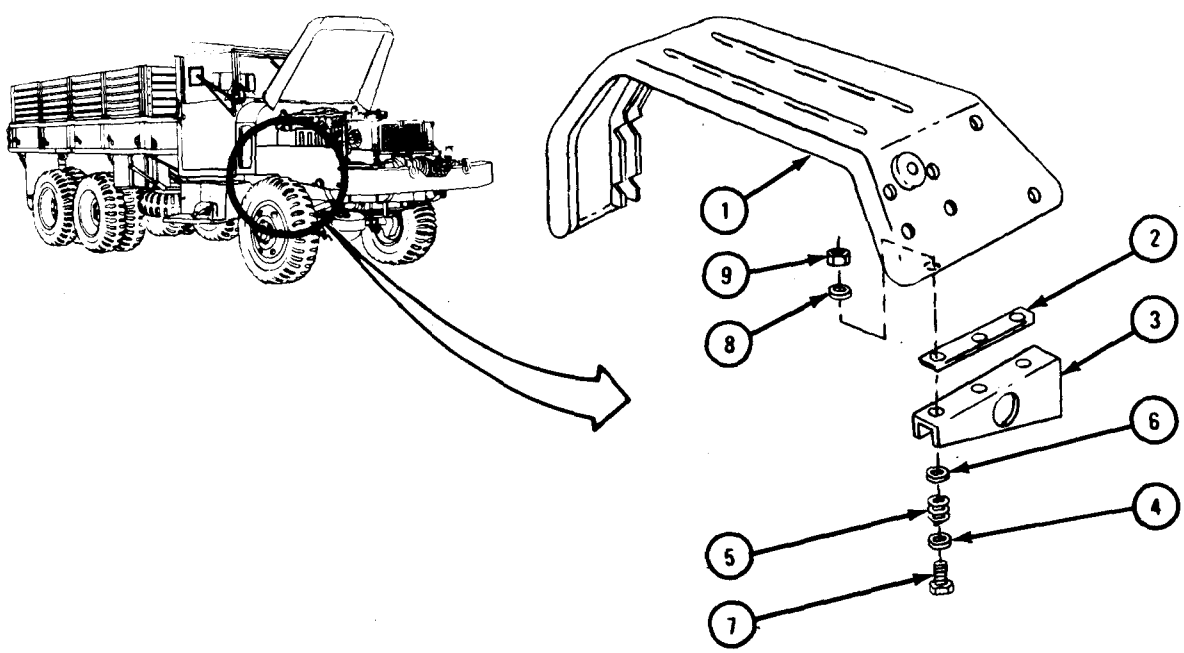

TA 101784

FRAME 2

Soldier A 1. Hold fender (1) in place.

Soldier B 2. Slip antisqueak material (2) in back of fender (1). Aline three slots in antisqueak material (2) with three holes in fender (1).

3. Put in three screws with assembled washers (3).

4. Put bolt (4) through fender (1) and fender brace (5). Put on flat washer (6) and self-locking nut (7).

5. Do step 4 again for another bolt (4).

6. Tighten three screws (3). Hold two bolts (4) and tighten two nuts (7).

7. Put screw with assembled washer (8) in fender splash apron (9). Tighten screw (8).

GO TO FRAME 3

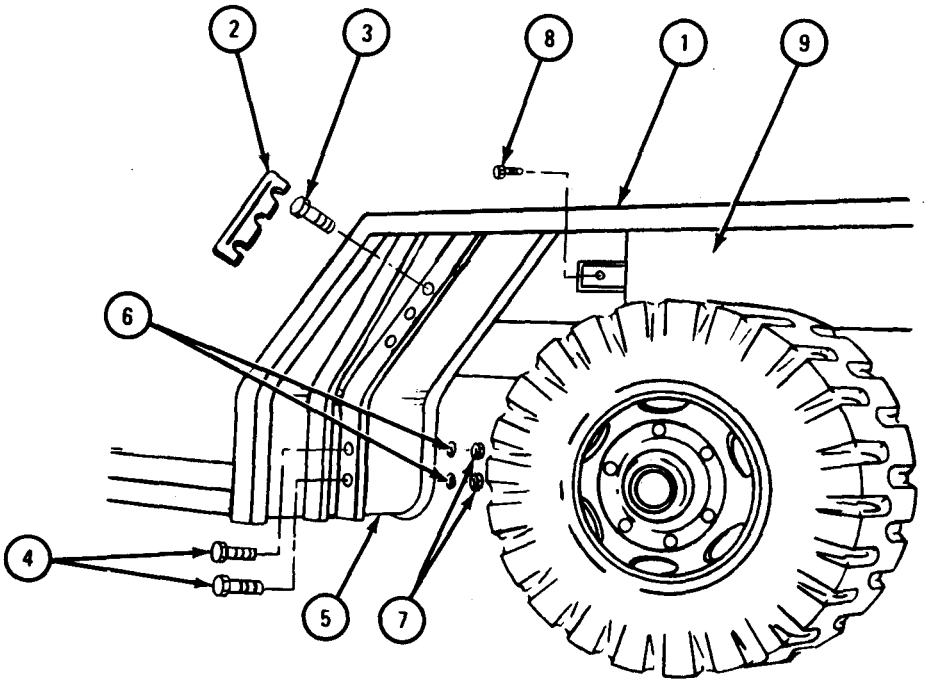

TA 101789

FRAME 3

1. Push wiring harness (1) into place under fender support (2).
2. Aline hole in fender support (2) with hole in wiring harness clip (3) and put screw (4) through fender support and wiring harness clip.
3. Put nut (5) on screw (4).
4. Do steps 2 and 3 again for other wiring harness clip (6).

GO TO FRAME 4

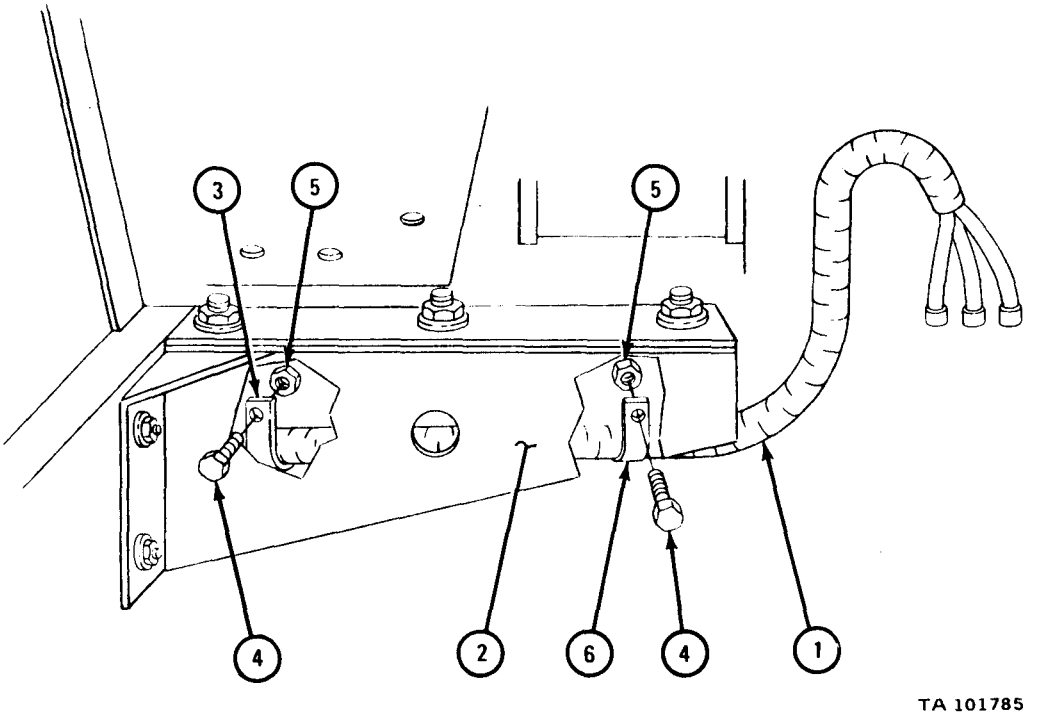

FRAME 4

Soldier A 1. Working between fender and bumper, put three screws (1) in lamp support bracket (2). Hold three screws (1).

Soldier B 2. Working under front of fender, put on and tighten three nuts (3).

IF WORKING ON RIGHT FENDER, GO TO FRAME 5.
IF WORKING ON LEFT FENDER, GO TO FRAME 6

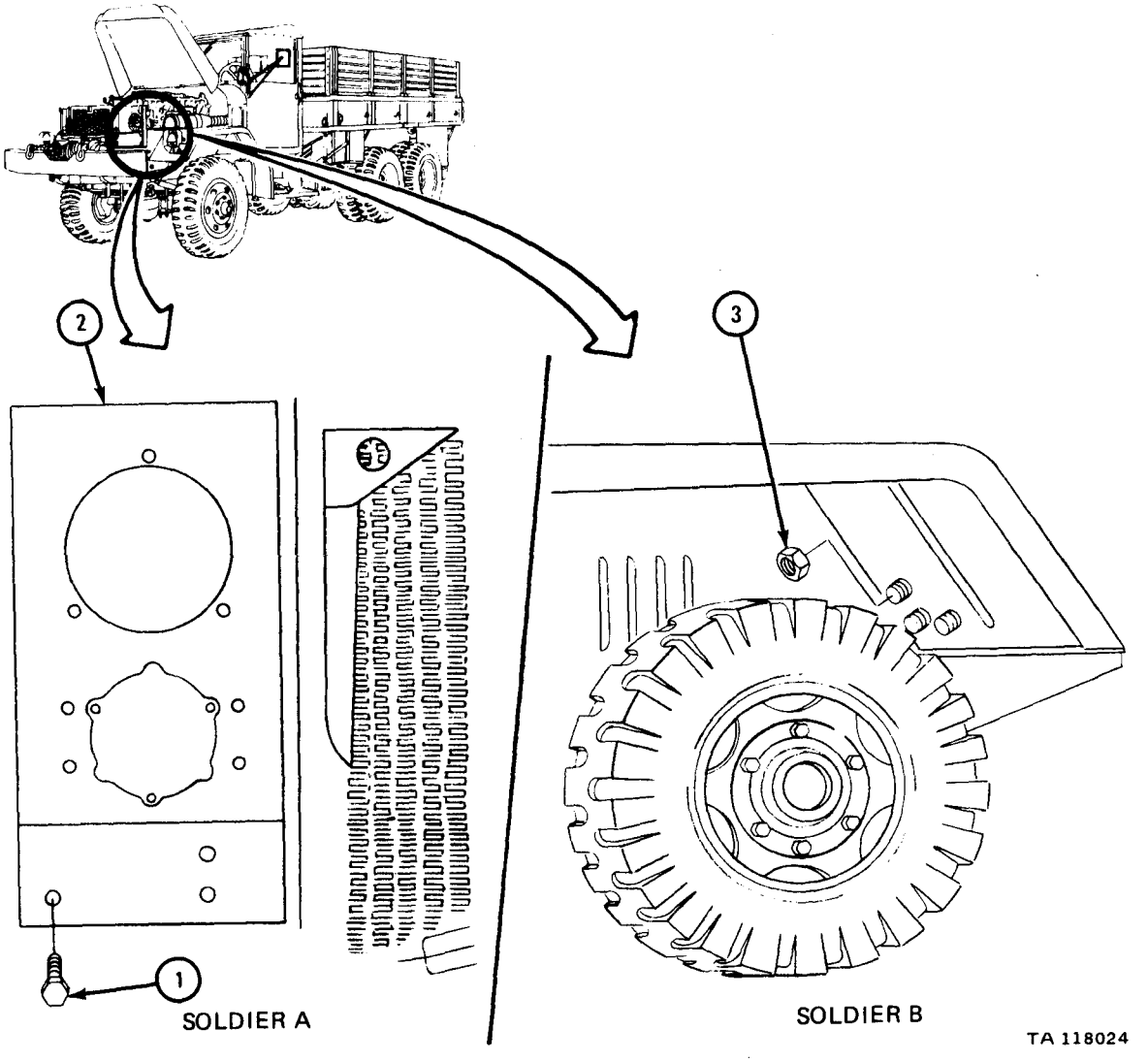

FRAME 5

Soldier A 1. Aline hole in horn bracket (1) to hole in fender (2) and put in screw (3),

2. Aline hole in bracket (4) to hole in horn bracket (1) and put in screw (5).

3. Aline hole in clamp (6) with hole in fender (2) and put in screw (7).

4. Put in and hold two screws (8).

Soldier B 5. Working under fender, put two nuts (9) on screws (8). Tighten two nuts (9).

GO TO FRAME 7

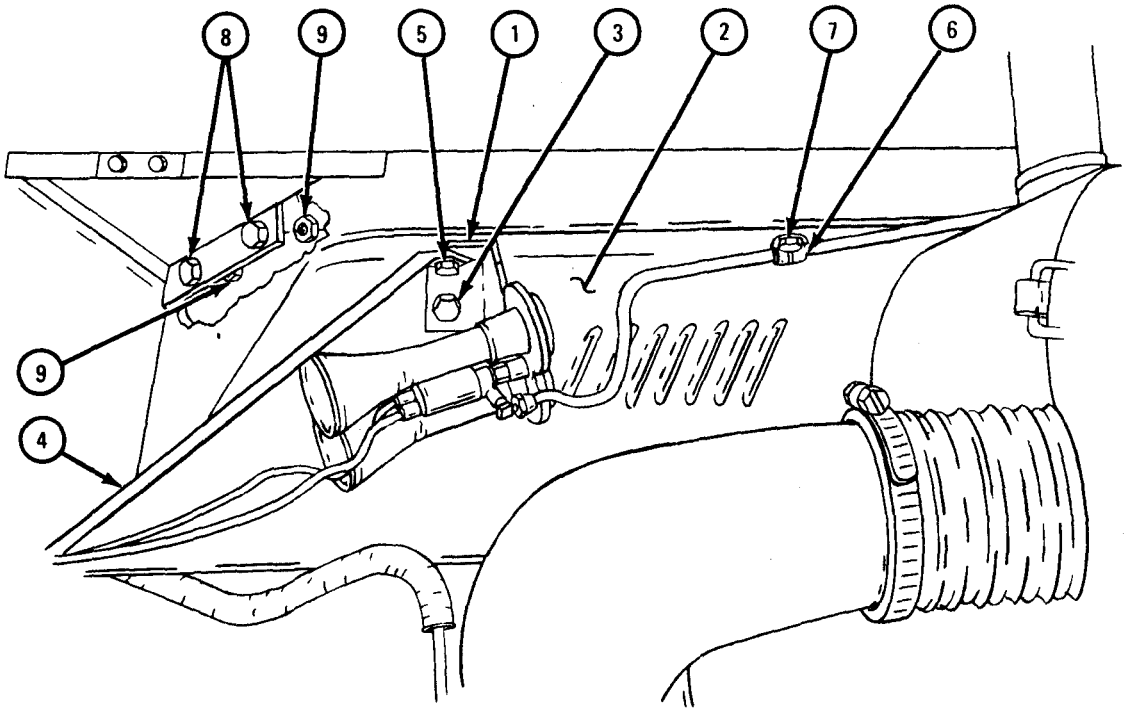

TA 101786

FRAME 6

Soldier A 1. Working inside engine compartment, put regulator (1) on fender (2)

Soldier B 2. Working under fender, put in two screws (3).

Soldier A 3. Working inside engine compartment, put on ground lead (4) and two nuts (5).

4. Put two screws (6) in lamp support bracket panel filler (7). Hold two screws (6).

Soldier B 5. Working under fender, put on and tighten two nuts (8).

Soldier A 6. Put screw (9) in fender support (10).

GO TO FRAME 7

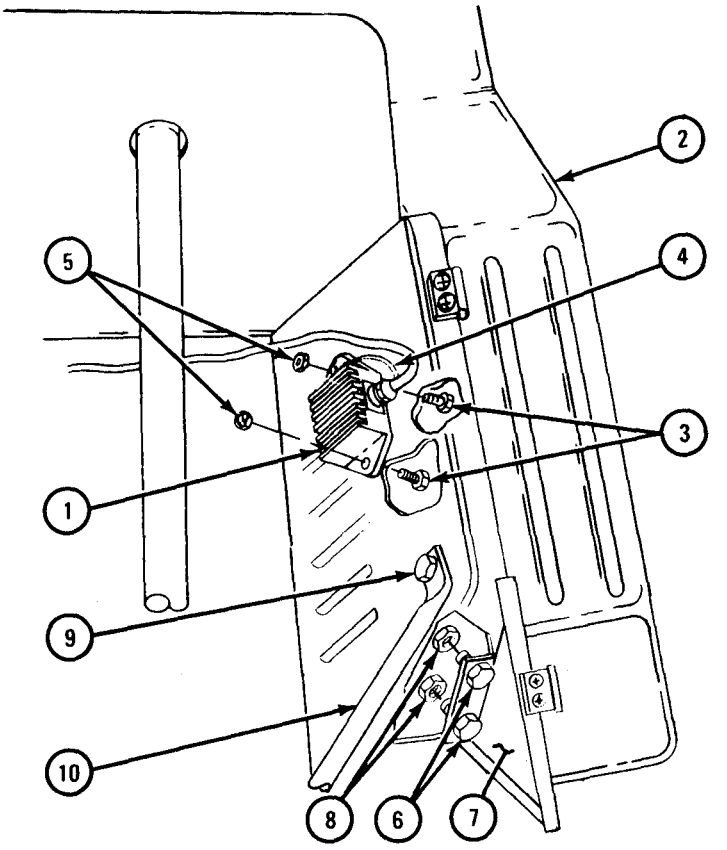

TA 104102

FRAME 7

1. Push wires (1) for marker light assembly (2) through fender (3).
2. Put wiring harness (4) through protector box (5) and plug in wires (1).
3. Aline holes in protector box (5), fender (3), and marker light assembly (2) and put in four bolts (6).
4. Working under fender, put four nuts (7) on bolts (6). Tighten four nuts (7).

GO TO FRAME 8

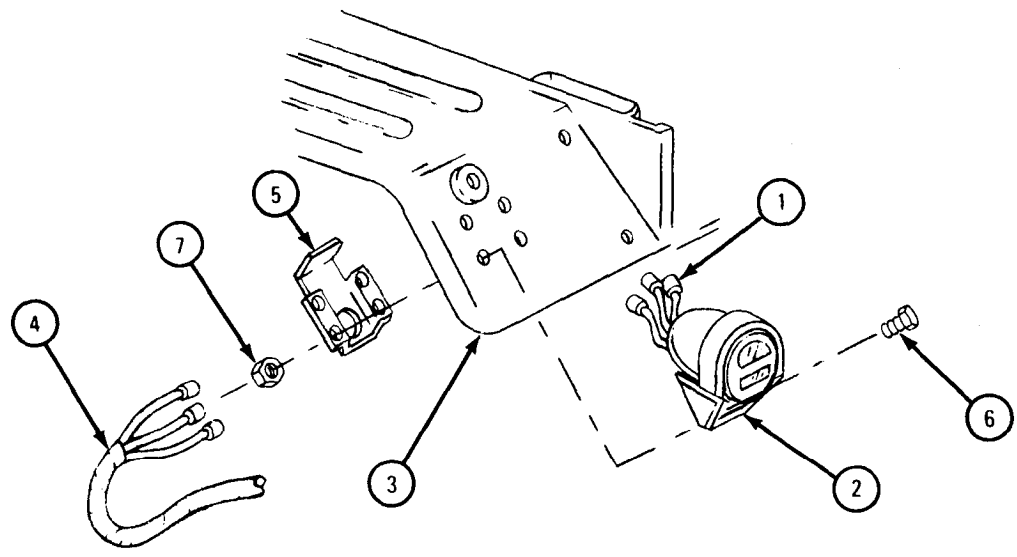

TA 101788

FRAME 8

NOTE

Follow-on Maintenance Action Required:

1. If working on left fender and truck has vehicular compartment heater, replace vehicular compartment heater and exhaust tube. Refer to TM 9-2320-209-20.
2. If working on left fender and truck has personnel hot water heater, put on personnel hot water heater. Refer to TM 9-2320-209-20.
3. If working on right fender of truck equipped with an exhaust stack, put on exhaust stack. Refer to TM 9-2320-209-20.
4. If working on right fender, put on air cleaner intake hood. Refer to TM 9-2320-209-20.
5. If working on right fender and vehicle is equipped with an engine compartment heater, put heater control wire in place and put on clamp. Refer to Hot Water Personnel Heater Blower Motor Repair, TM 9-2320-209-20.
6. If working on right fender, replace and close hood right side panel. If working on left fender, replace and close hood left side panel. Refer to TM 9-2320-209-10.
7. Close hood. Refer to TM 9-2320-209-10.

END OF TASK

17-8. REAR FENDER REMOVAL, REPAIR, AND REPLACEMENT (TRUCKS M275A1 AND M275A2).

NOTE

This task is the same for the right and left rear fenders. This task is shown for the right rear fender.

TOOLS: No special tools required

SUPPLIES: Solvent, dry cleaning, type II (SD-2), Fed. Spec P-D-680

PERSONNEL: Two

EQUIPMENT CONDITION: Truck parked, engine off, handbrake set.

a. Removal.

FRAME 1

1. Working at bottom right side of truck, take out three bolts (1) and nuts (2).

GO TO FRAME 2

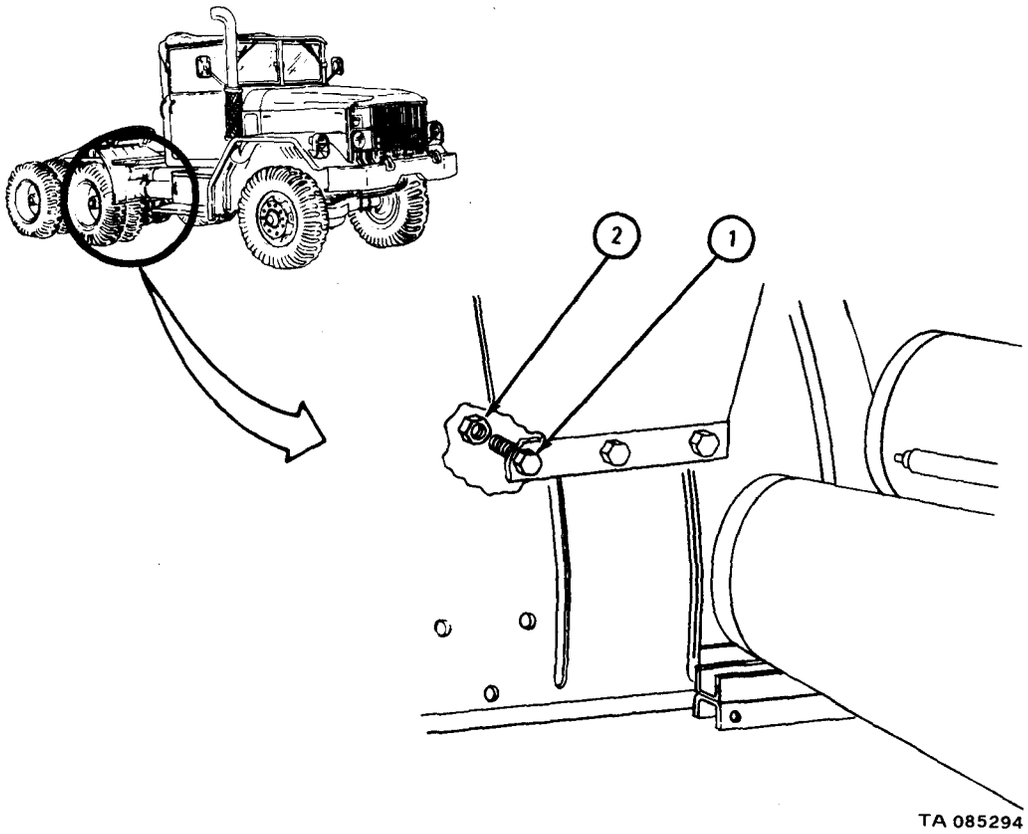

FRAME 2

Soldier A 1. Hold fender so it does not fall when taking out last bolt (2).

Soldier B 2. Working on top side of rear fender (1), take out four bolts (2) and nuts (3).

Soldier A 3. Take off fender (1) from deck plate (4).

END OF TASK

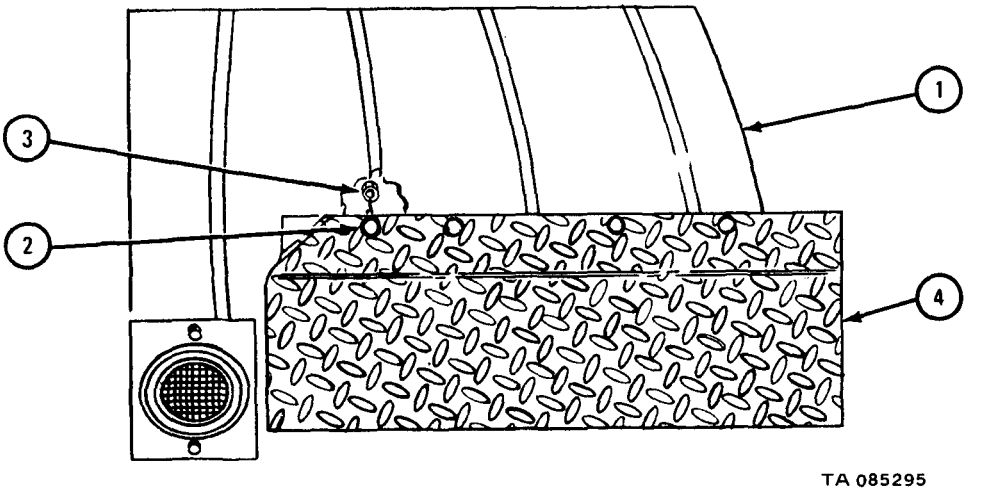

b. Cleaning.

WARNING

Dry cleaning solvent is flammable. Do not use near an open flame. Keep a fire extinguisher nearby when solvent is used. Use only in well-ventilated places. Failure to do this may result in injury to personnel and damage to equipment.

(1) Clean part with solvent.

(2) If needed, use steam, wire brushes or scrapers to take off grease or gum.

c. Inspection and Repair.

(1) Check that fender has no dents, cracks, bends, loose or cracked welds or holes.

(2) Fix dents in fender with a peening hammer or rubber mallet.

(3) Fix cracks or holes in fender by welding. Refer to TM 9-237.

(4) If more repair is needed, get a new part.

(5) Paint fender after repair. Refer to TM 43-0139.

d. Replacement.

FRAME 1

Soldier A 1. Working on right side of truck, put top of fender (1) on deck plate (2) and aline holes.

Soldier B 2. Put in four bolts (3) and nuts (4).

GO TO FRAME 2

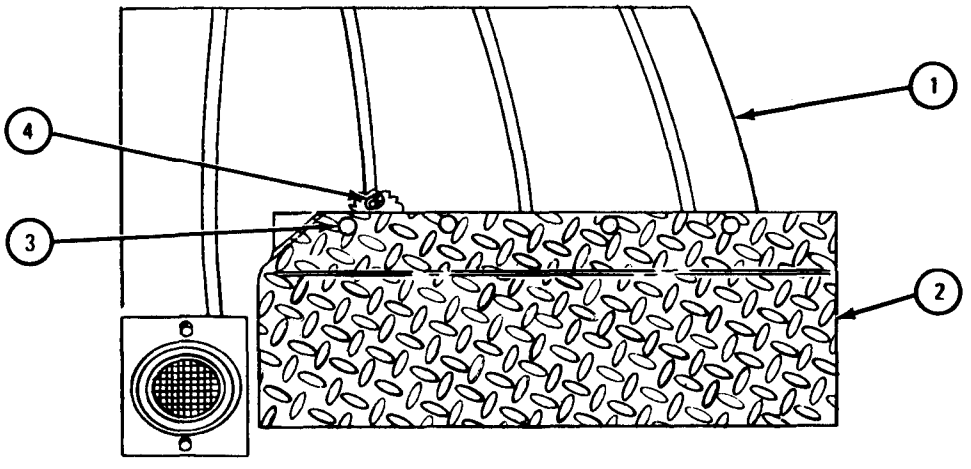

TA 085297

FRAME 2

1. Aline holes in bottom of fender (1) and fender brace (2).
2. Put in three bolts (3) and nuts (4).

END OF TASK

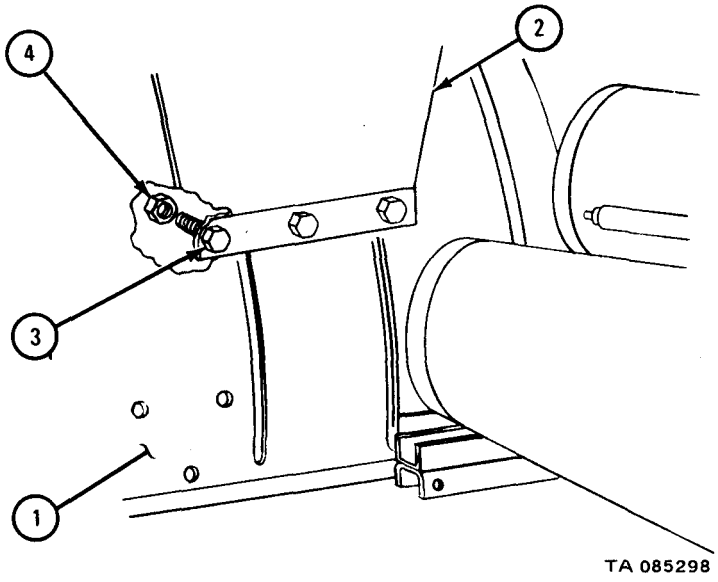

17-9. RIGHT RUNNING BOARD AND BATTERY BOX REMOVAL, REPAIR, AND REPLACEMENT.

TOOLS: No special tools required

SUPPLIES: Solvent, dry cleaning, type II (SD-2), Fed. Spec P-D-680
Compressed air source, 30 psi max

PERSONNEL: Two

EQUIPMENT CONDITION: Truck parked, engine off, handbrake set.

a. Preliminary Procedure. Remove batteries. Refer to TM 9-2320-209-20.

b. Removal.

FRAME 1

1. Take out battery box (1).

GO TO FRAME 2

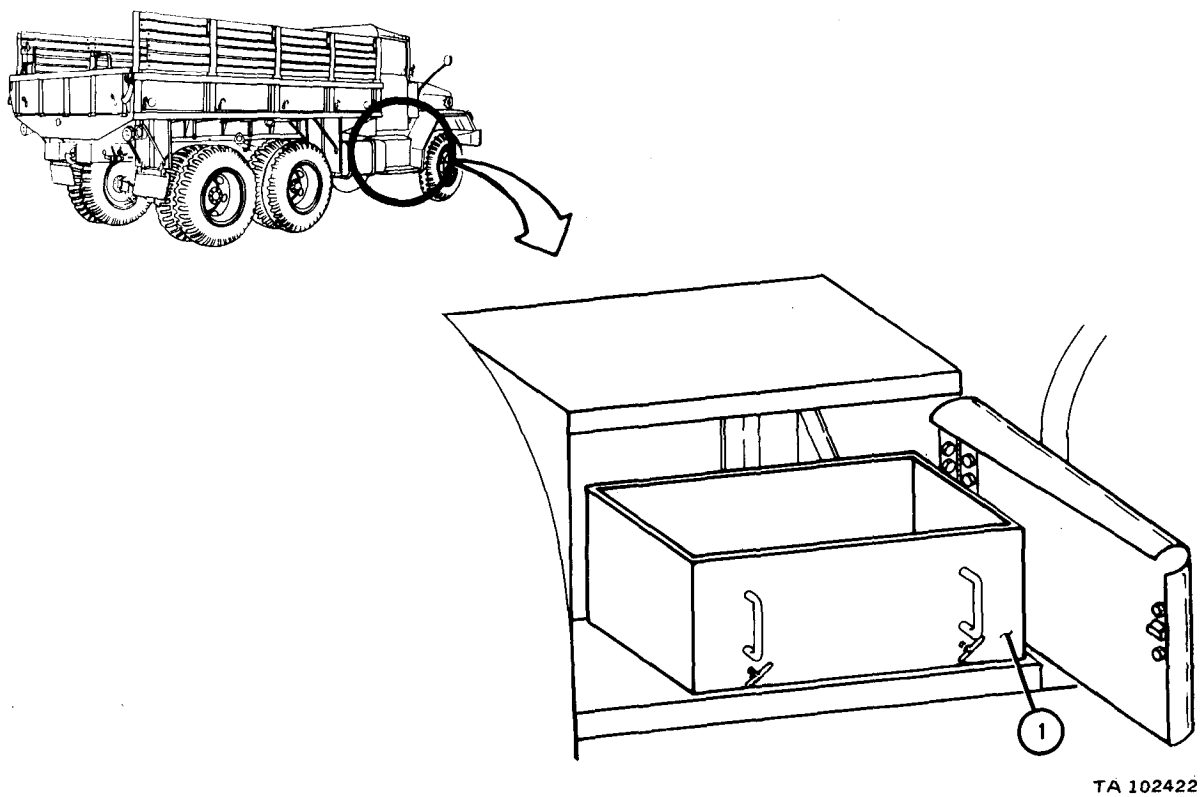

FRAME 2

1. Take out five screws (1) and five nuts (2).
2. Take off battery compartment door (3).

GO TO FRAME 3

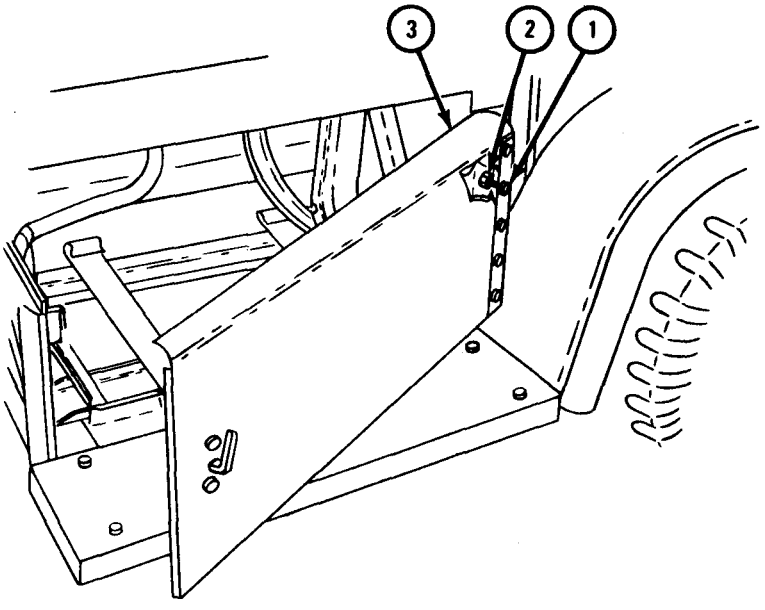

TA 102668

FRAME 3

1. Take out four capscrews (1) and four nuts (2).
2. Take off running board (3).

GO TO FRAME 4

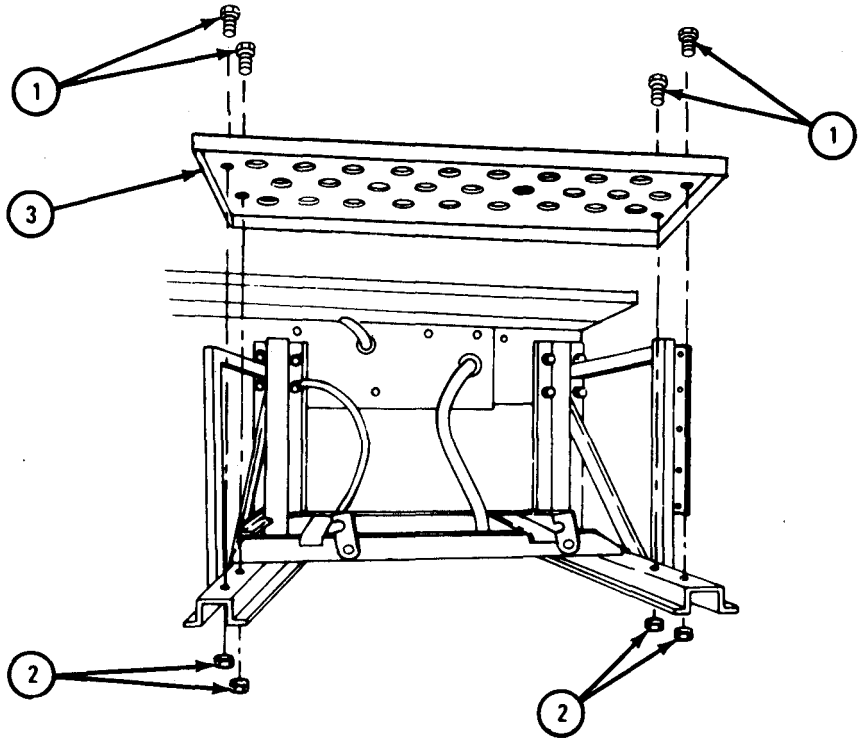

NOTE: PARTS WITHOUT CALLOUTS ARE SHOWN ONLY FOR REFERENCE PURPOSES.

TA 102669

FRAME 4

1. Take off four nuts (1) and four capscrews (2).
2. Take off shelf (3).

GO TO FRAME 5

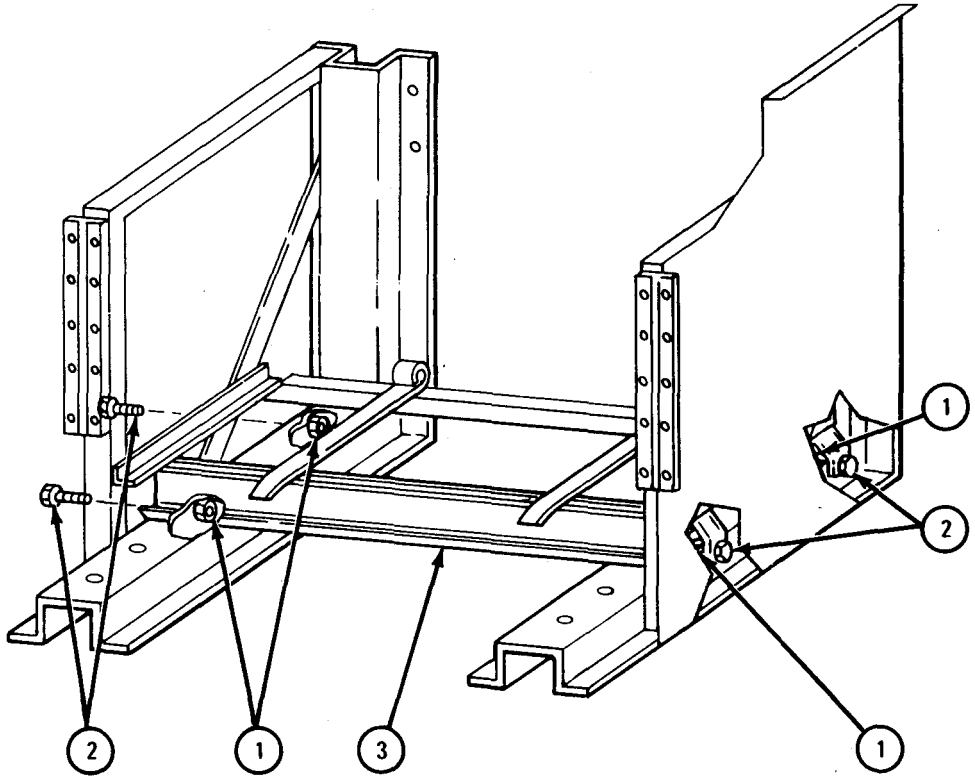

NOTE: PARTS WITHOUT CALLOUTS ARE SHOWN ONLY FOR REFERENCE PURPOSES.

TA 102421

FRAME 5

Soldier A 1. Hold four nuts (1). Tell soldier B when ready.

Soldier B 2. Hold shelf bracket (2). Take out four cap screws (3), battery ground cable (4), and two starwashers (5). Take off shelf bracket.

Soldier A 3. Hold four nuts (6). Tell soldier B when ready.

Soldier B 4. Hold shelf bracket (7) and unscrew two capscrews (8).

Soldier A 5. Take three clamps (9) off two cap screws (8).

Soldier B 6. Take out two capscrews (10) and take off shelf bracket (7).

GO TO FRAME 6

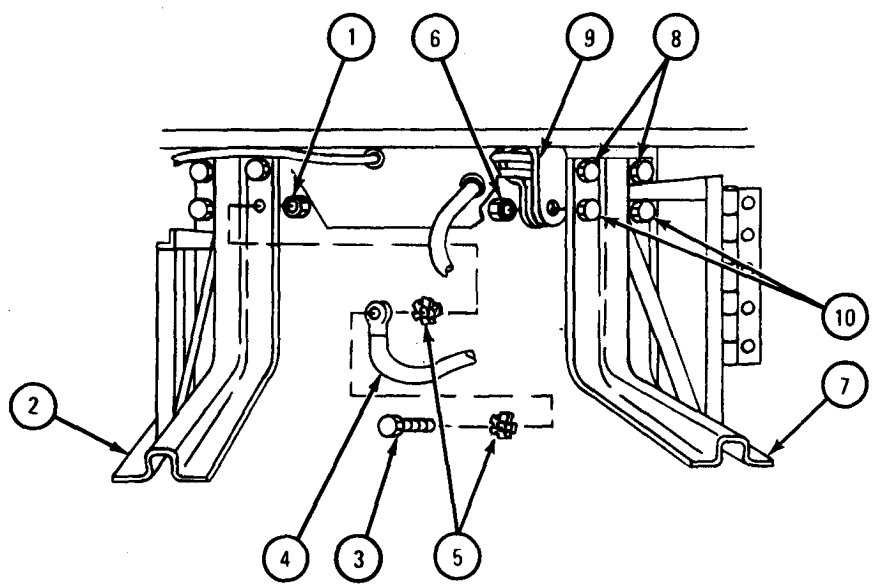

NOTE: PARTS WITHOUT CALLOUTS ARE SHOWN ONLY FOR REFERENCE PURPOSES.

TA 102670

FRAME 6

1. Take off four nuts (1) from four screws (2).
2. Take plate (3) off right support bracket (4).

END OF TASK

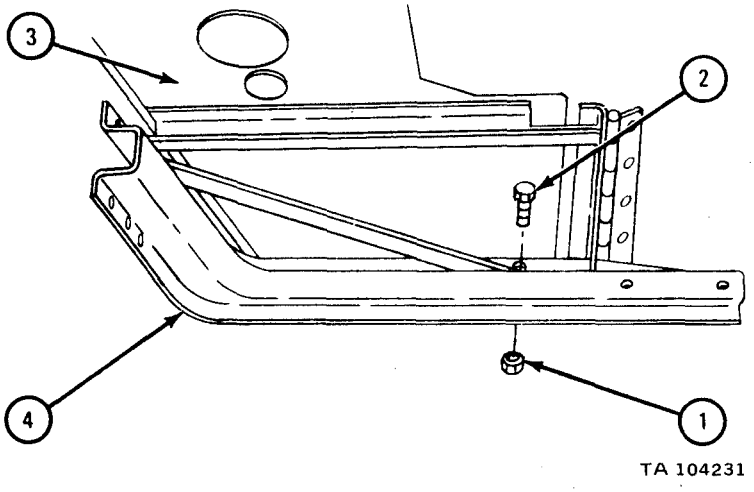

c. Cleaning. There are no special cleaning procedures needed. Refer to cleaning procedures given in Part 1, para 1-3.

d. Inspection and Repair.

FRAME 1

1. Check that door (1), battery box (2), running board (3), shelf (4), two brackets (5), and plate (6) have no bends, dents, cracks or other damage.
2. Straighten bent or dented parts. Refer to FM 43-2. Weld cracked parts. Refer to TM 9-237.

END OF TASK

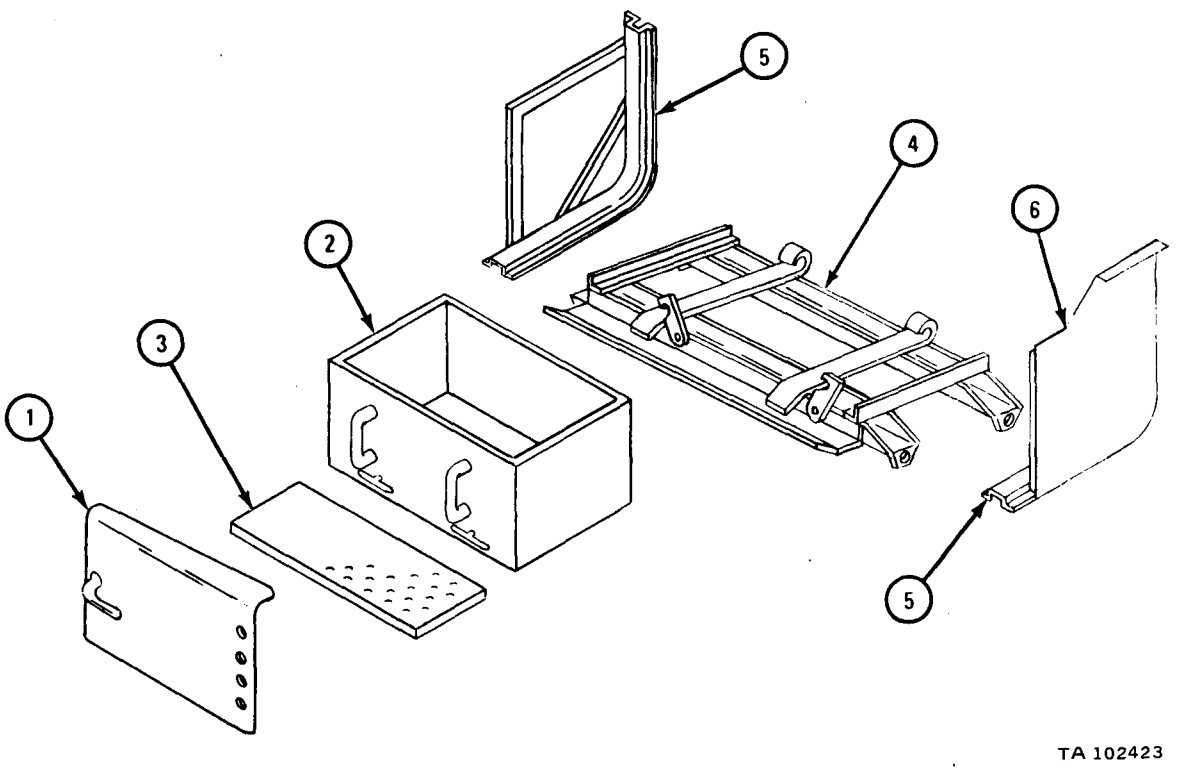

e. Replacement.

FRAME 1

1. Put plate (1) on support bracket (2).
2. Put in four screws (3).
3. Put on four nuts (4).

GO TO FRAME 2

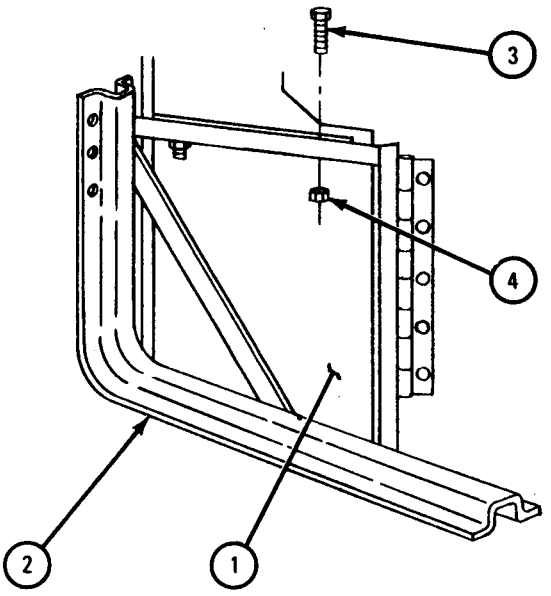

TA 104232

FRAME 2

Soldier A 1. Put shelf bracket (1) in place and aline screwholes. Put in and hold four cap screws (2).

Soldier B 2. Put on three clamps (3) and four nuts (4).

Soldier A 3. Put shelf bracket (5) in place and aline screwholes. Put in and hold four capscrews (6), two star washers (7), and battery ground cable (8).

Soldier B 4. Put on four nuts (9).

GO TO FRAME 3

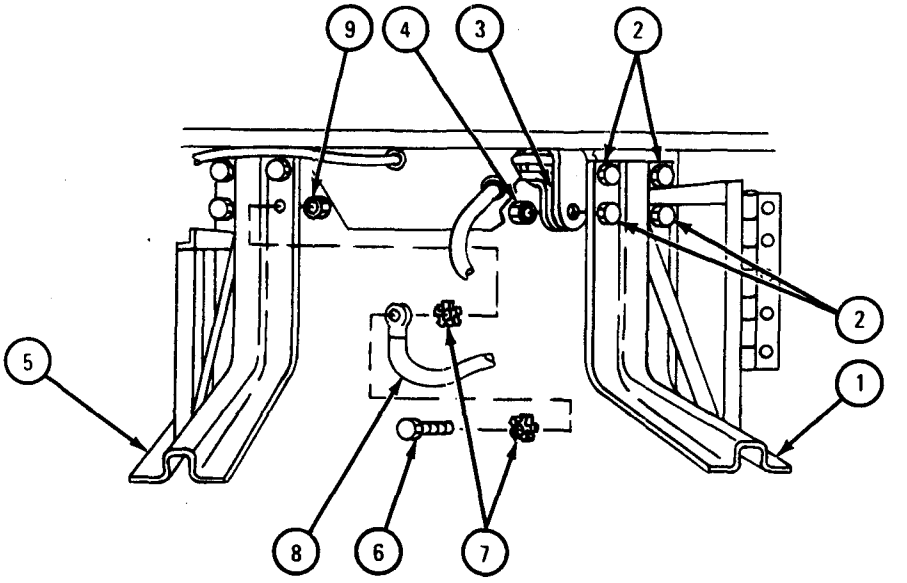

TA 102425

FRAME 3

1. Put shelf (1) on two brackets (2) and aline screw holes.
2. Put in four capscrews (3) and put on four nuts (4).

GO TO FRAME 4

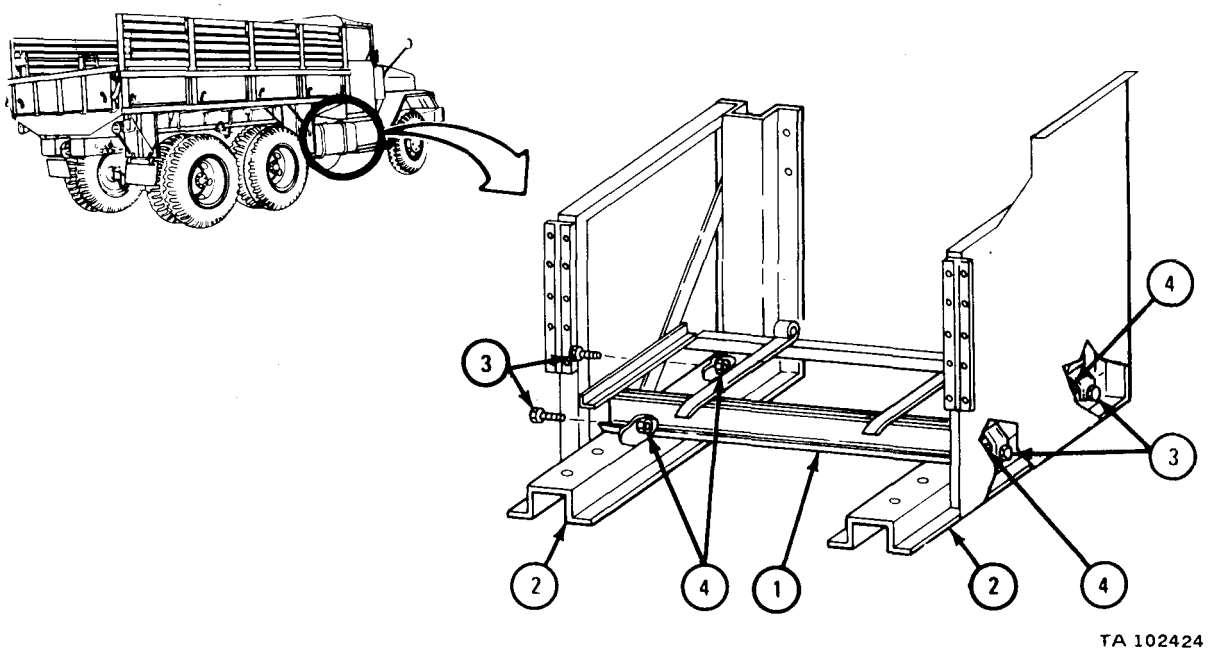

FRAME 4

1. Put running board (1) on two brackets (2) and aline screw holes.
2. Put in four capscrews (3) and put on four nuts (4).

GO TO FRAME 5

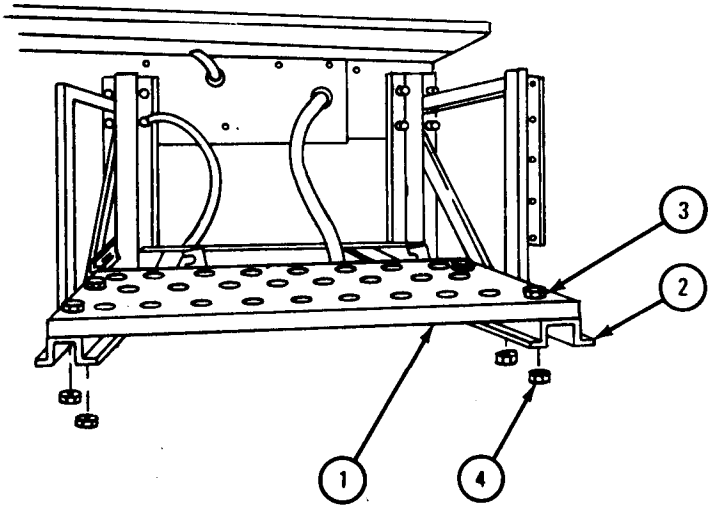

NOTE: PARTS WITHOUT CALLOUTS ARE SHOWN ONLY FOR REFERENCE PURPOSES.

TA 102426

FRAME 5

1. Put battery compartment door (1) on battery compartment (2) and aline screw holes.
2. Put in five screws (3) and put on five nuts (4).

GO TO FRAME 6

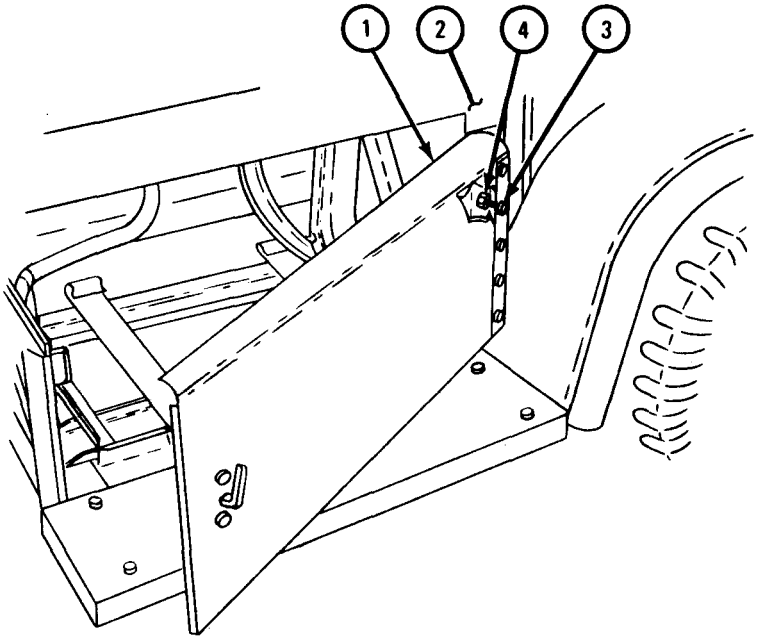

TA 102427

FRAME 6

1. Put battery box (1) on running board (2).

NOTE

Follow-on Maintenance Action Required:

Replace batteries. Refer to TM 9-2320-209-20.

END OF TASK

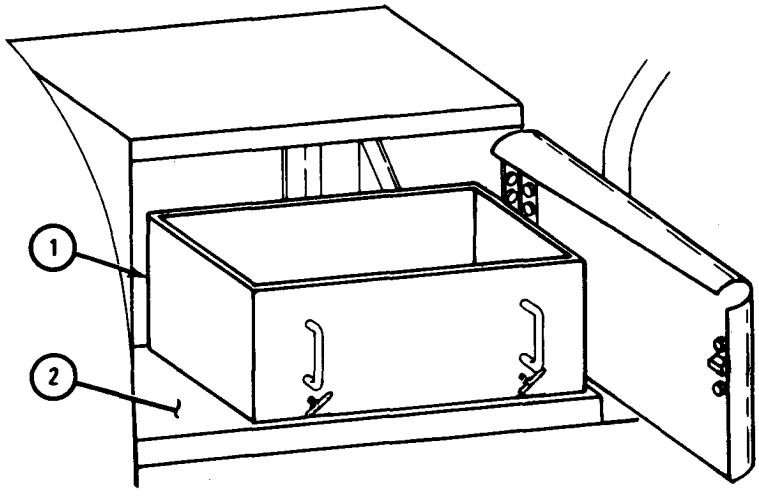

TA 102428

17-10. LEFT RUNNING BOARD, GASOLINE DRUM BRACKET, AND TOOL BOX REPAIR (ALL TRUCKS EXCEPT M275A1 AND M275A2).

TOOLS: No special tools required

SUPPLIES: Soapy water

PERSONNEL: One

EQUIPMENT CONDITION: Truck parked, engine off, handbrake set.

a. Preliminary Procedure. Remove gasoline drum bracket (1). Refer to TM 9-2320-209-20.

b. Disassembly.

FRAME 1

1. Take out two screws (2) and nuts (3), and take off running board (4).
2. Take out two machine screws (5) and nut (6). Take off door catch (7).
3. Take out five machine screws (8) and nuts (9). Take off door (10).
4. Take out 18 screws (11) and nuts (12). Take off tool box (13).

END OF TASK

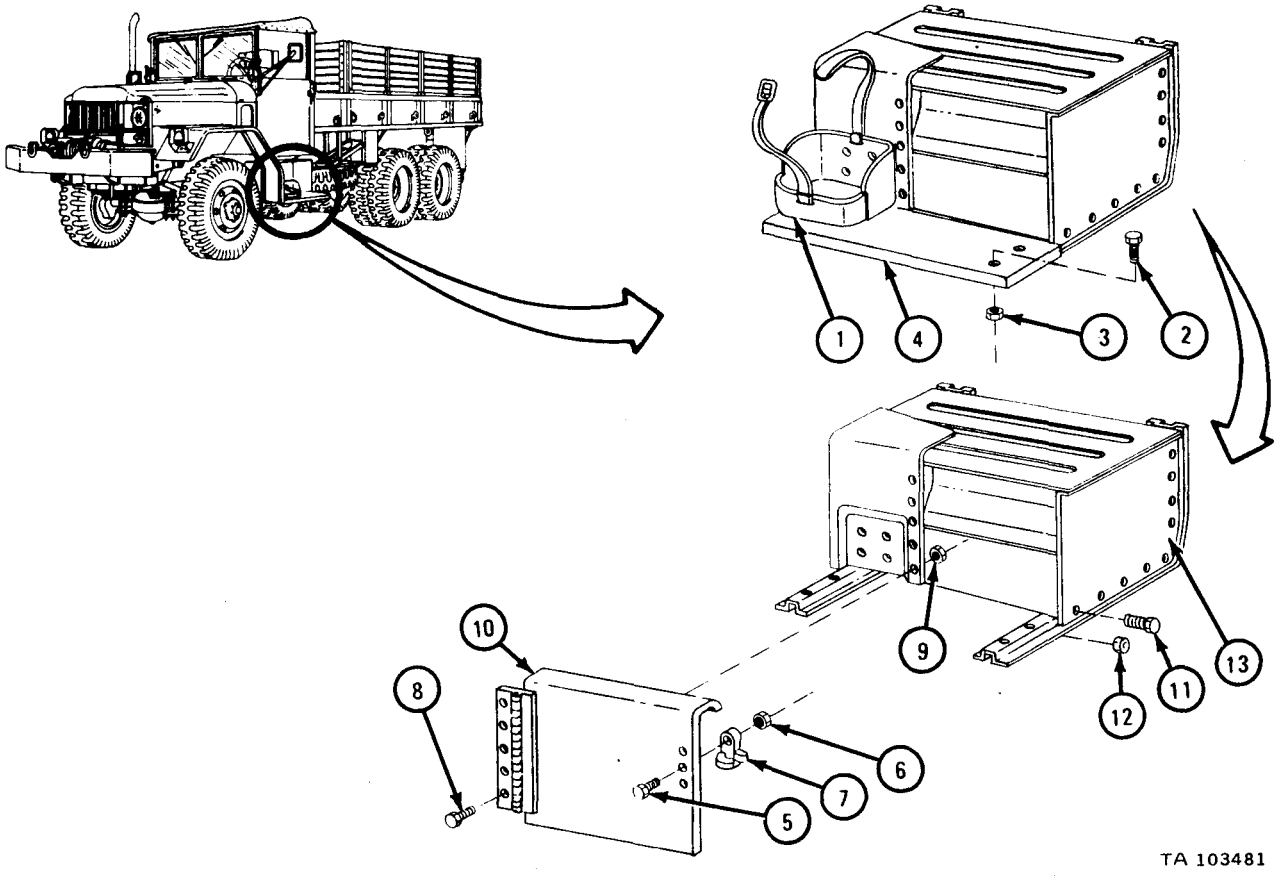

c. Cleaning. Clean allParts with stiff brush and soapy water.

d. Inspection. Check that all parts have no bends, dents, cracks, holes or broken welds.

e. Repair.

(1) Straighten bent or dented parts. Refer to FM 43-2.

(2) Weld cracks, holes or broken welds. Refer to TM 9-237.

f. Assembly.

FRAME 1

1. Aline tool box (1) with support brackets (2). Put in 18 screws (3) and nuts (4).
2. Put door catch (5) in place and aline screw holes. Put in machine screw (6) and nut (7).
3. Put door (8) in place and aline screw holes. Put in five machine screws (9) and nuts (10).
4. Put running board (11) in place and aline screw holes. Put in two screws (12) and nuts (13).

NOTE

Follow-on Maintenance Action Required:

Replace gasoline drum bracket (14). Refer to TM 9-2320-209-20.

END OF TASK

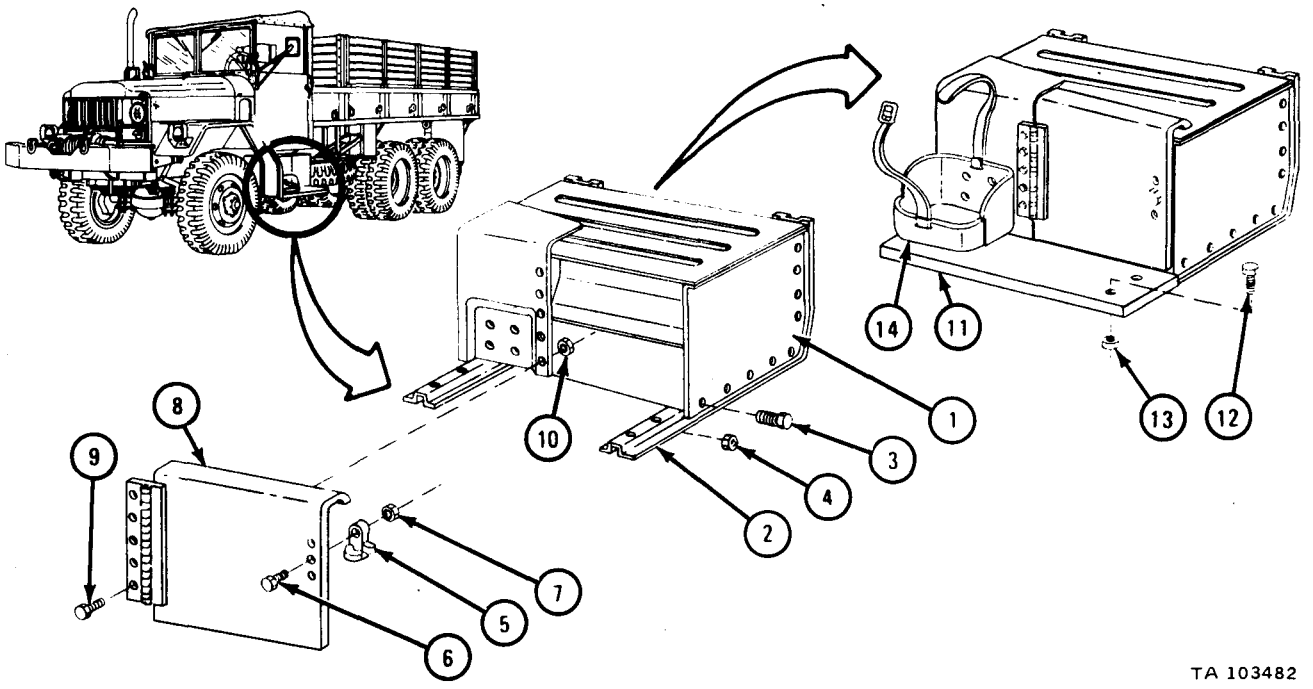

17-11. VEHICULAR FLAT WINDSHIELD ASSEMBLY REPAIR.

TOOLS: No special tools required

SUPPLIES: Weatherstripping
Adhesive, MMM-A-1617
Soapy water
Solvent, dry cleaning, type II (SD-2), Fed. Spec P-D-680
Clean rags
Lint-free cloth

PERSONNEL: One

EQUIPMENT CONDITION: Truck parked, engine off, handbrake set.

a. Preliminary Procedure. Remove windshield. Refer to TM 9-2320-209-20.

b. Disassembly.

FRAME 1

1. Take out two screws, washers, and capnuts (1) from crosspiece (2).
2. Take out four screws and washers (3) from frame (4).
3. Put wooden block under crosspiece (2) and tap lightly until crosspiece is free from glass (5).

GO TO FRAME 2

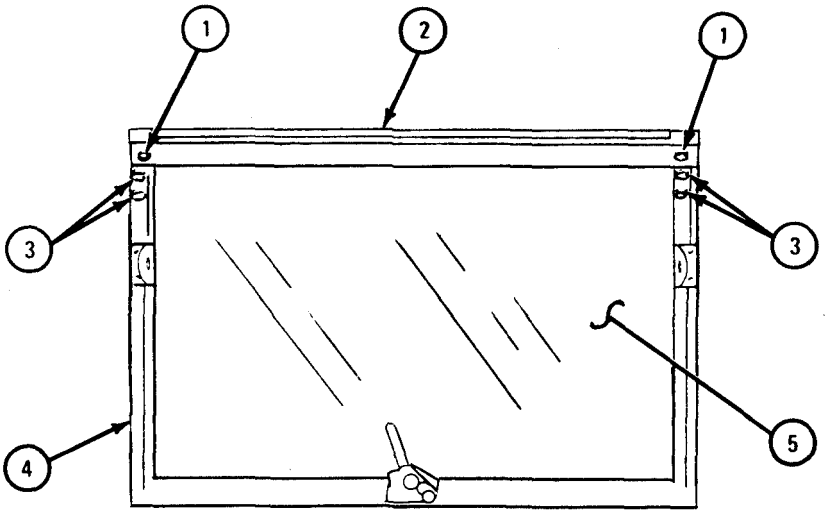

TA 085407

FRAME 2

1. Take out two screws (1) on latch (2). Take off latch.
2. Pry upper corners of side pieces of frame (3) away from glass (4).
3. Pry up and take out glass (4).
4. Take out and throw away weatherstripping (5) from crosspiece (6) and frame (3).

END OF TASK

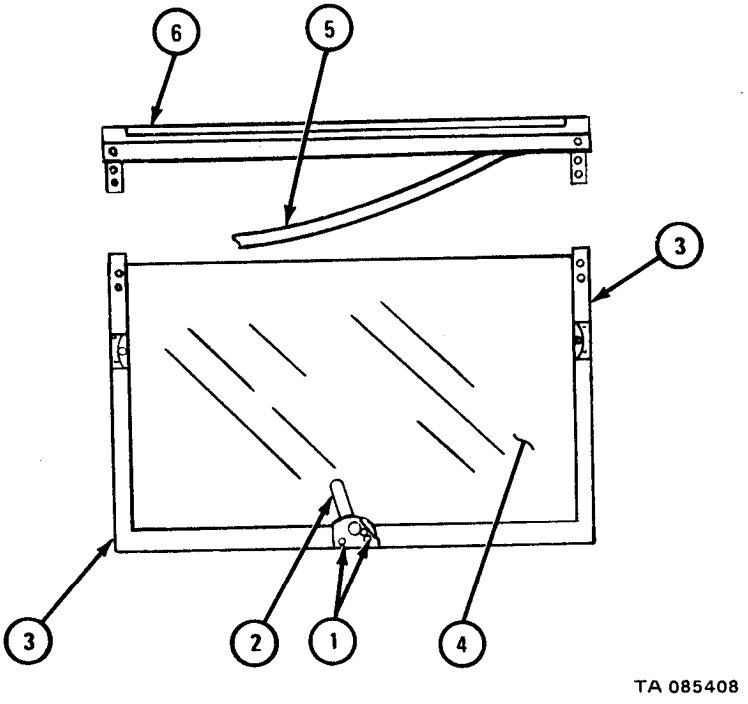

c. Cleaning.

(1) Clean glass with soap and water. Dry glass with lint-free cloth,

WARNING

Dry cleaning solvent is flammable. Do not use near an open flame. Keep a fire extinguisher nearby when solvent is used. Use only in well-ventilated places. Failure to do this may result in injury to personnel and damage to equipment.

(2) Clean metal parts with dry cleaning solvent. Dry with clean rags.

d. Inspection and Repair.

FRAME 1

1. Check that frame (1) and crosspiece (2) are not cracked, dented or broken. Throw away damaged parts and get new ones.
2. Check that safety glass (3) is not cracked, chipped or discolored. Throw away damaged glass and get new glass.

END OF TASK

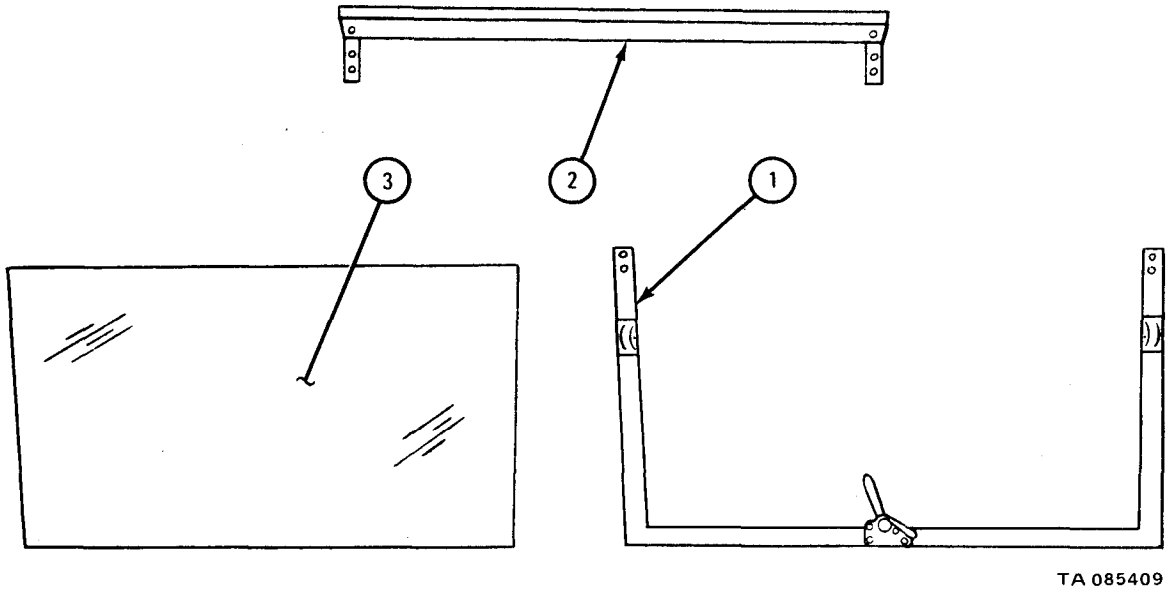

e. Assembly.

FRAME 1

1. Glue weatherstripping (1) in place in crosspiece (2) and frame (3) with adhesive.
2. Put safety glass (4) in frame (3) and seat it in weatherstripping.
3. Put in two screws (5) in latch (6) and frame (3).

GO TO FRAME 2

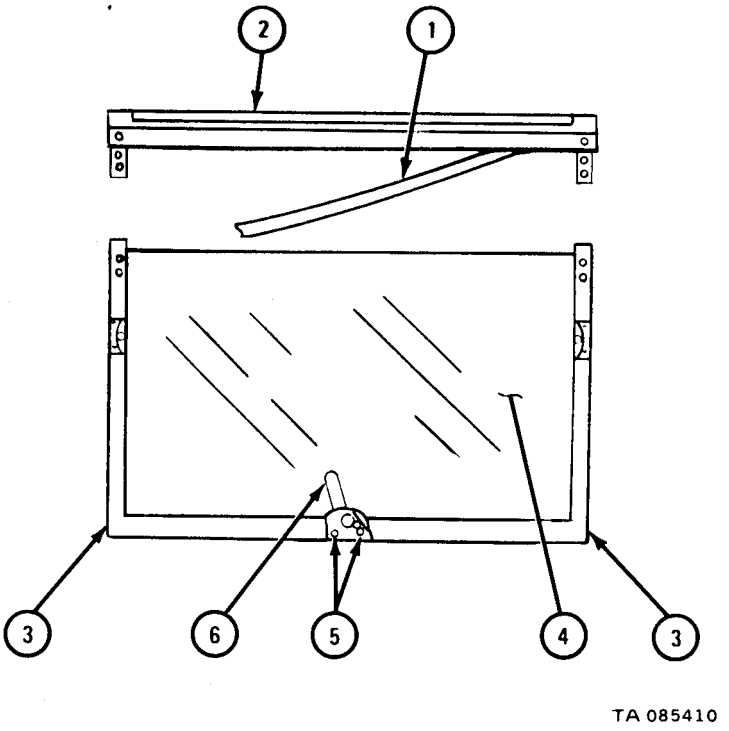

FRAME 2

1. Put crosspiece (1) on frarne (2).
2. Put in four screws and washers (3).
3. Put two screws, washers, and capnuts (4) into crosspiece (1).
4. Trim weatherstripping even with frame (2) and crosspiece (1),

NOTE

Follow-on Maintenance Action Required:
Replace windshield. Refer to TM 9-2320-209-20.

END OF TASK

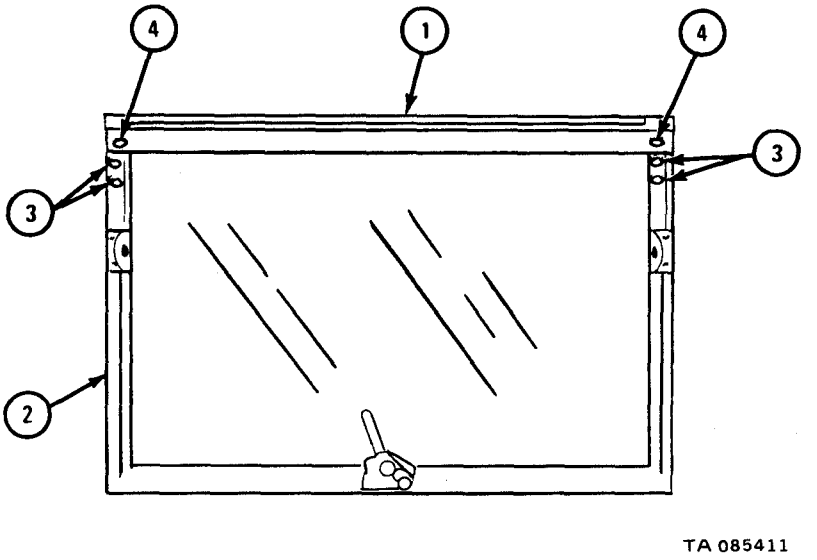

Section IV. SEATS

17-12. FLOATING DRIVER'S SEAT ASSEMBLY REPAIR.

TOOLS: No special tools required

SUPPLIES: None

PERSONNEL: One

EQUIPMENT CONDITION: Truck parked, engine off, handbrake set.

a. Preliminary Procedure. Remove floating driver's seat and backrest cushions. Refer to TM 9-2320-209-20.

b. Disassembly.

FRAME 1

1. Take off four nuts with washers (1). Take off seat frame (2).

GO TO FRAME 2

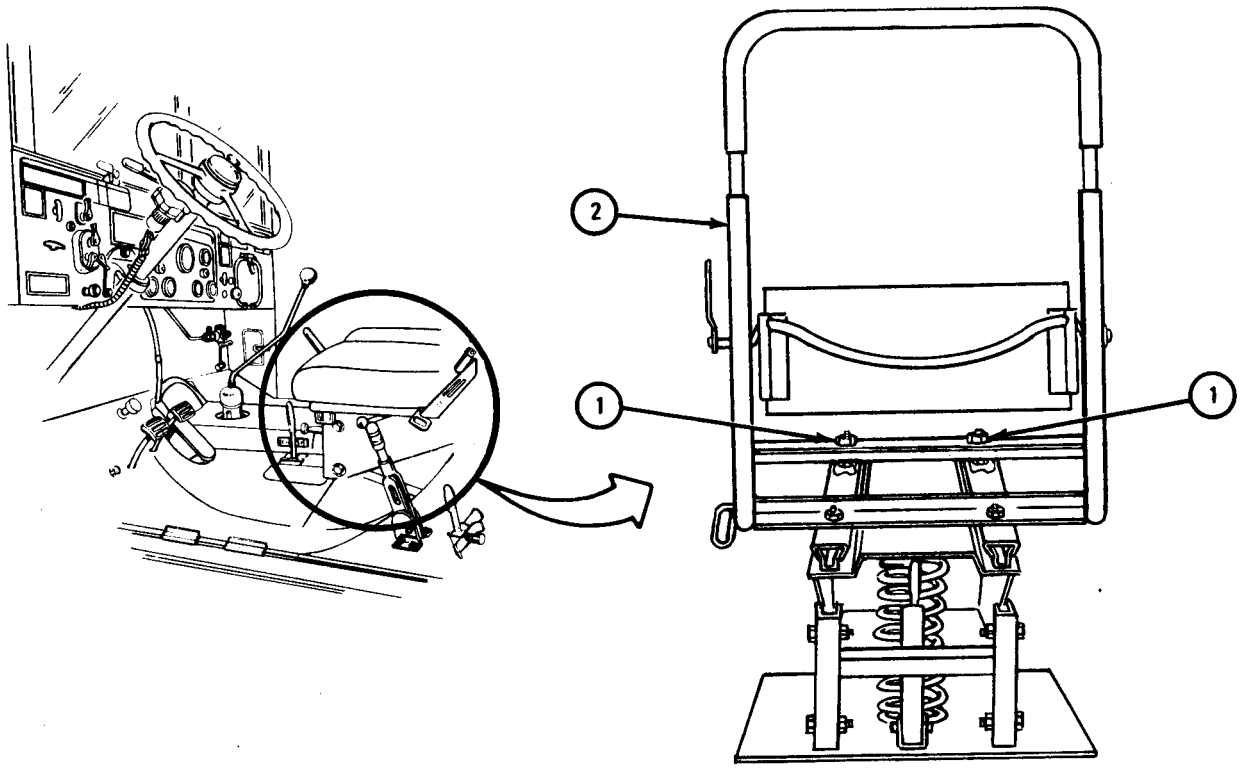

FRAME 2

1. Take off two nuts (1).
2. Take off two screws and washers (2).
3. Lift off adjuster assemblies (3 and 4).
4. Take out four screws (5).
5. Lift out seat assembly (6).

GO TO FRAME 3

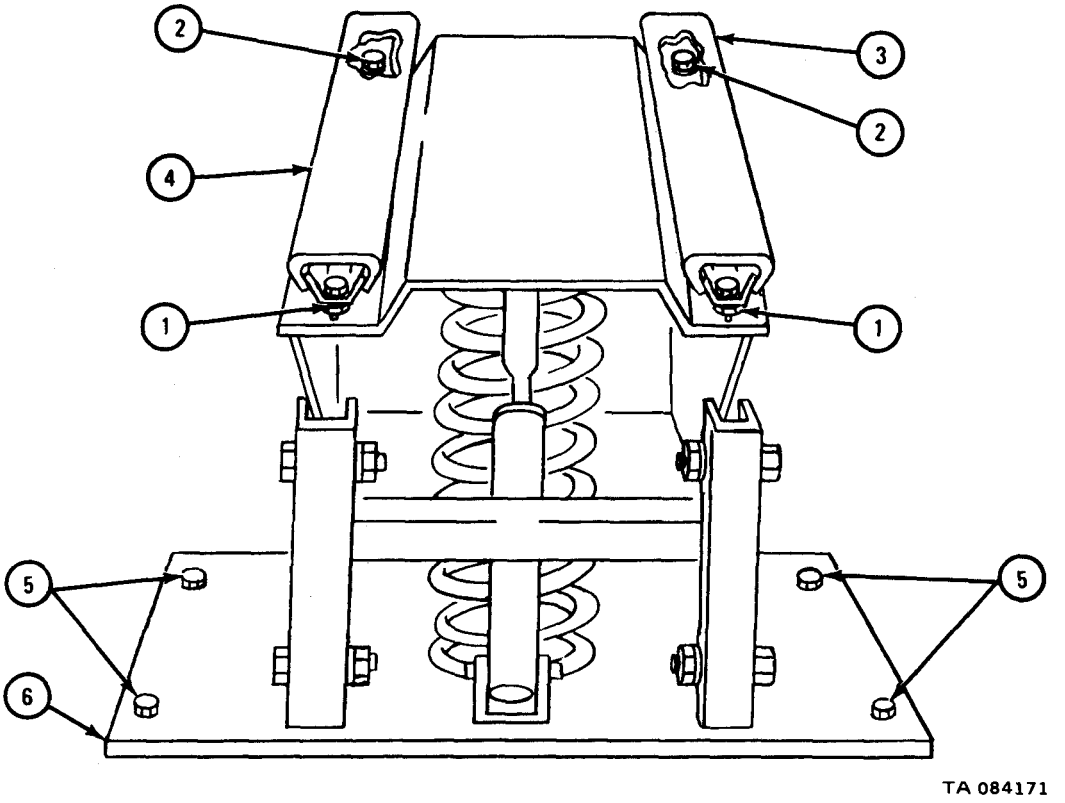

FRAME 3

1. Put puller set 15-inch all-thread rod (1) through bracket (2), spring (3), and base (4). Put puller set flat plate (5) and nut (6) on each end of thread rod.
2. Tighten puller set nuts (6) to compress spring (3) 1/2 to 1 inch.

GO TO FRAME 4

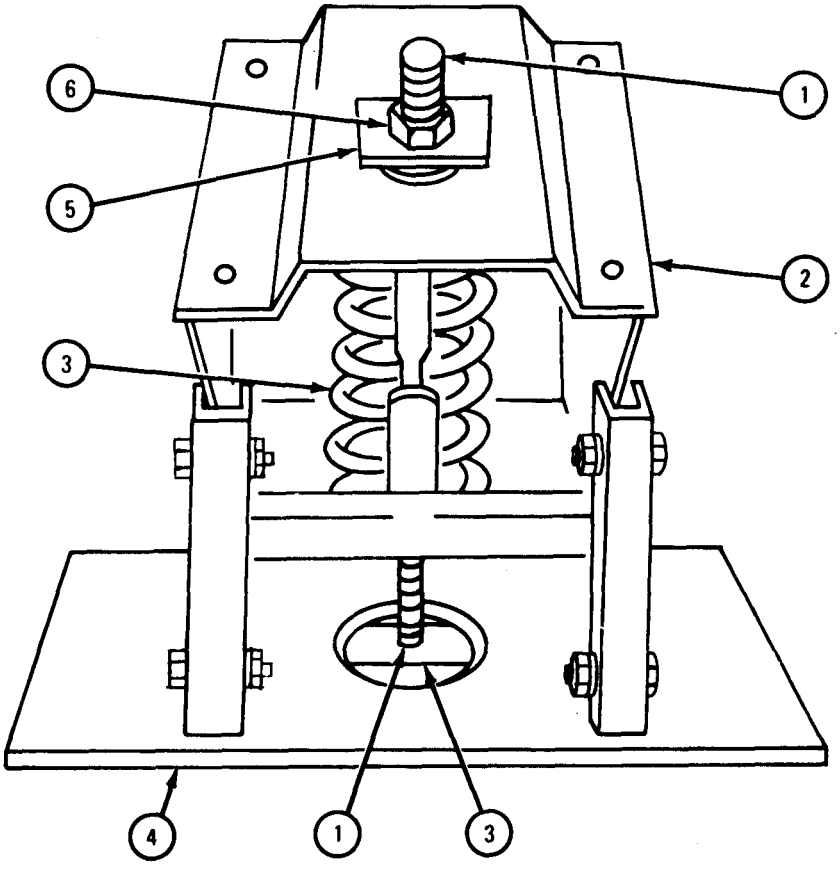

FRAME 4

1. Take off two nuts (1) and screws (2).
2. Takeout shock absorber (3).

END OF TASK

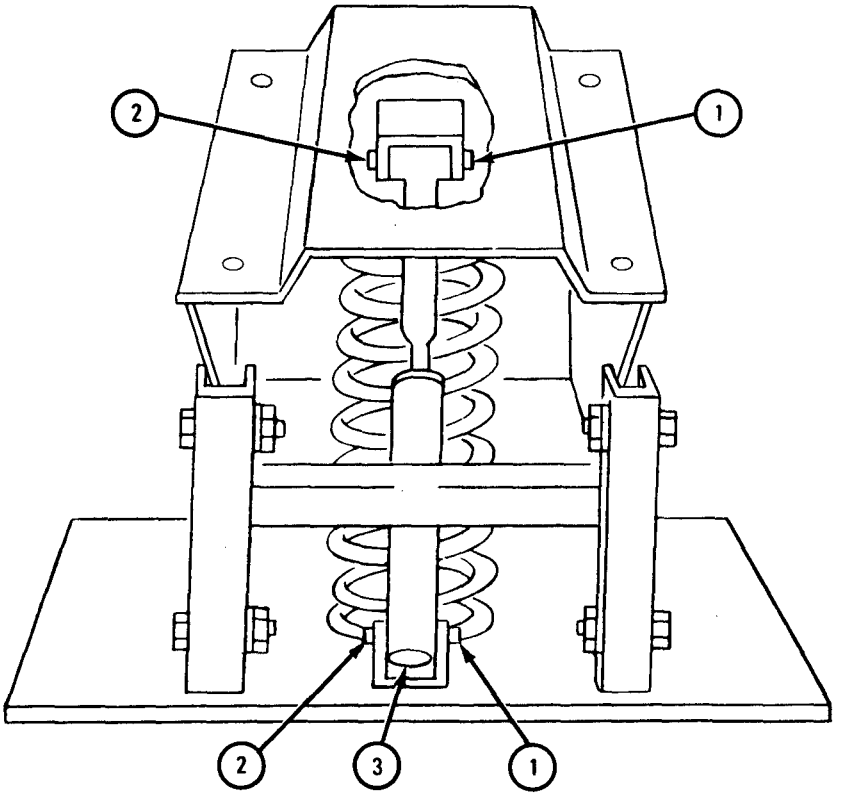

TA 084173

c. Inspection.

FRAME 1

1. Check that shock absorber (1) is not worn or damaged.
2. Check that the two adjuster assemblies (2 and 3) are not worn or cracked.
3. Check that frame (4) is not bent or cracked.
4. Check that seat cushion (5) and backrest cushion (6) have no tears or worn canvas.
5. Check that seat base (7) has no wear, broken parts, weak spring or any other damage.

END OF TASK

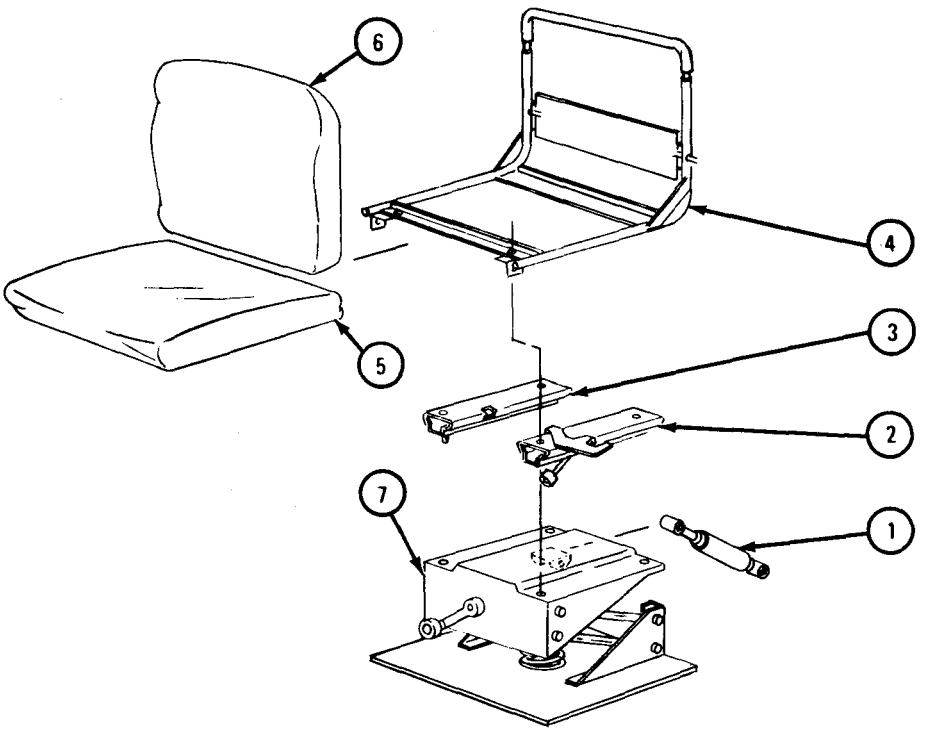

TA 084174

d. Repair. If shock absorber, seat cushion, or backrest cushion is worn or damaged, get a new one. If frame or seat base is bent or cracked, repair by welding. Refer to TM 9-237. If parts are broken, get new ones in their place.

e. Assembly.

FRAME 1

1. Put shock absorber (1) in seat brackets (2). Put in two screws (3).
2. Put on two nuts (4).

GO TO FRAME 2

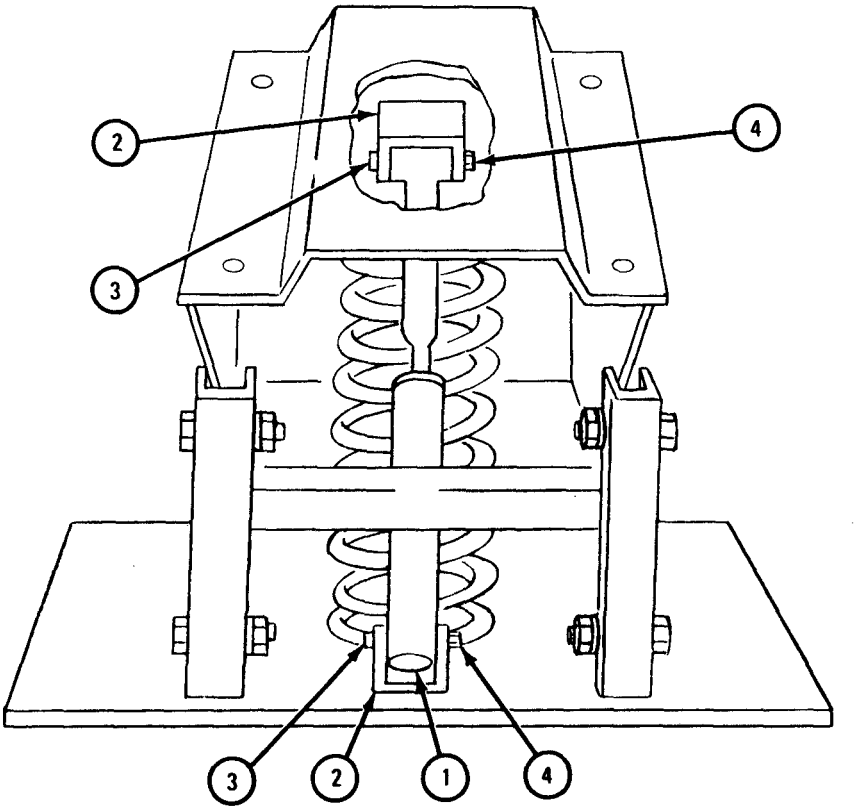

TA 084175

FRA.ME 2

1. Takeoff nut (1), plate (2), and all-thread rod (3) from seat assembly (4).
GO TO FRA.ME 3

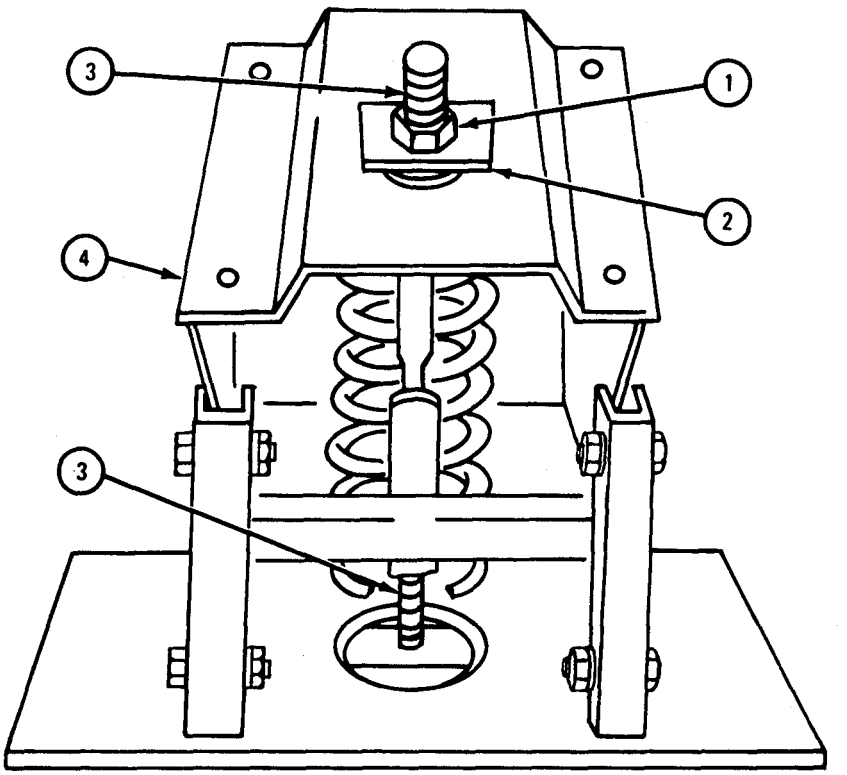

TA 084241

FRAME 3

1. Put seat assembly (1) into place.
2. Put in four screws (2).
3. Put adjuster assemblies (3 and 4) into place.
4. Put in two screws and washers (5).
5. Put in two screws (6). Put on two nuts (7).

GO TO FRAME 4

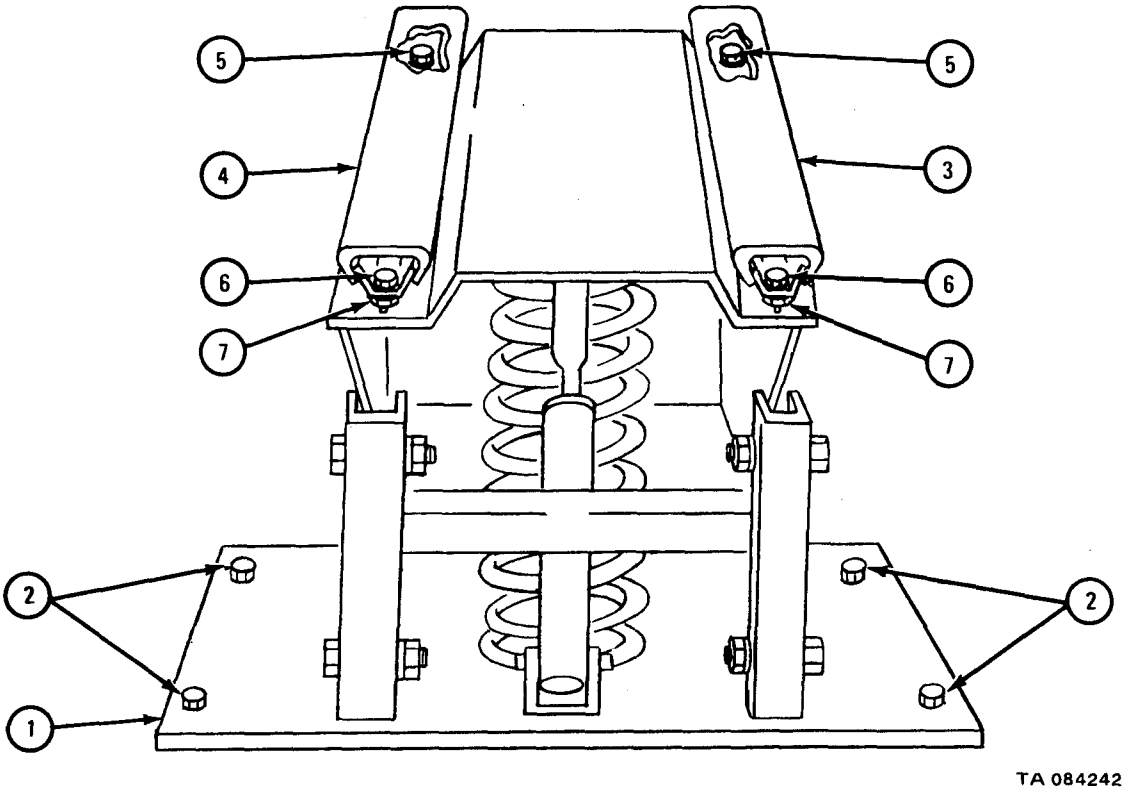

FRAME 4

1. Put seat frame (1) on studs (2) on adjuster assemblies (3 and 4).
2. Put on four nuts (5).

NOTE

Follow-on Maintenance Action Required:

Replace floating driver's seat and backrest cushions. Refer to TM 9-2320-209-20.

END OF TASK

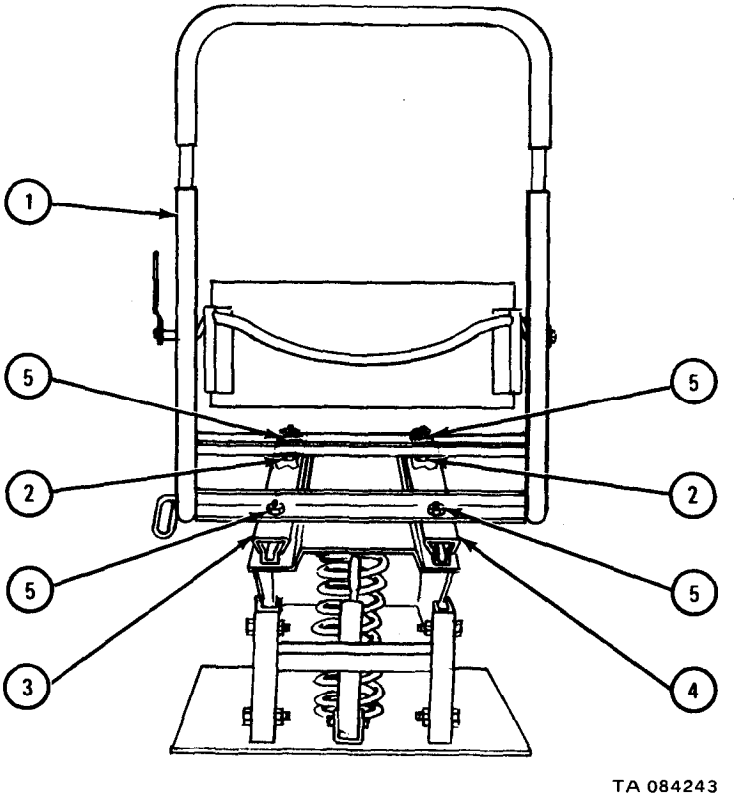

17-13. DRIVER'S SEAT (EARLY MODEL) REPAIR.

TOOLS: No special tools required

SUPPLIES: None

PERSONNEL: One

EQUIPMENT CONDITION: Truck parked, engine off, handbrake set.

a. Preliminary Procedure. Remove driver's seat. Refer to TM 9-2320-209-20.

b. Disassembly.

FRAME 1

1. Slide backrest cushion (1) up and off frame (2).
2. Take out two capscrews (3) and take off two nuts (4). Take off seat cushion (5).
3. Take out cotter pin (6), flat washer (7), pin (8), and spring (9). Take off adjusting handle (10).

END OF TASK

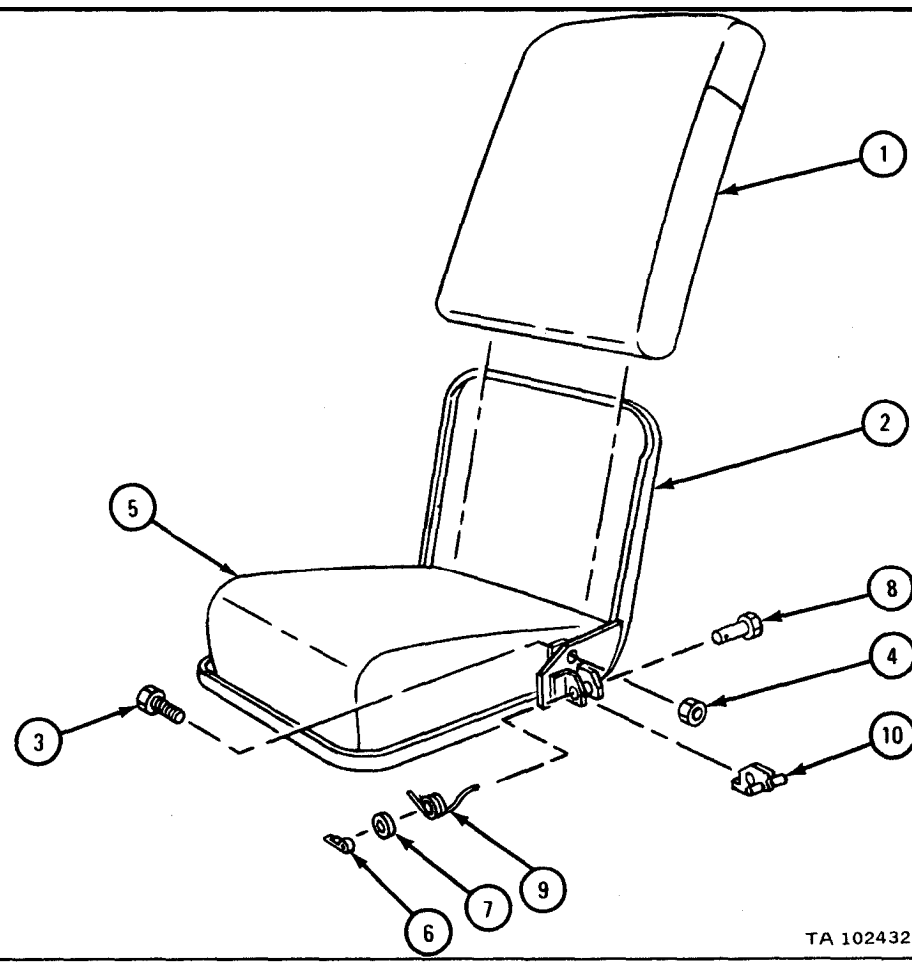

c. Cleaning. There are no special cleaning procedures required. Refer to cleaning procedures given in Part 1, para 1-3.

d. Inspection and Repair.

FRAME 1

1. Check that frame (1) is not bent or cracked. Repair by welding. Refer to TM 9-237. If more repair is needed, get a new part.
2. Check that adjusting handle (2) is not bent or cracked. If adjust handle is damaged, get a new one.
3. Check that spring (3) is not broken or weak. If spring is damaged, get a new one.
4. Check that seat cushion (4) and backrest cushion (5) have no tears or worn canvas. Repair damaged cushions. Refer to FM 43-3.
5. Working in cab, check that seat base (6) has no cracks or holes. Repair by welding. Refer to TM 9-237.

END OF TASK

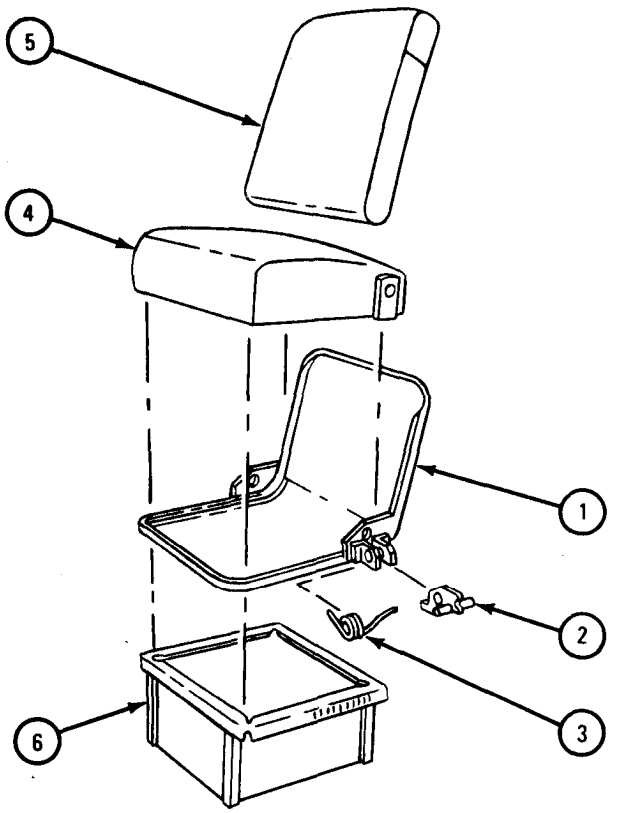

TA 102433

e. Assembly.

FRAME 1

1. Put adjusting handle (1) in place and aline holes. Put in spring (2).
2. Put on pin (3) and flat washer (4). Put in cotter pin (5).
3. Put seat cushion (6) on frame (7).
4. Put in two capscrews (8) and put on nuts (9).
5. Put on backrest cushion (10).

NOTE

Follow-on Maintenance Action Required:

Replace driver's seat. Refer to TM 9-2320-209-20.

END OF TASK

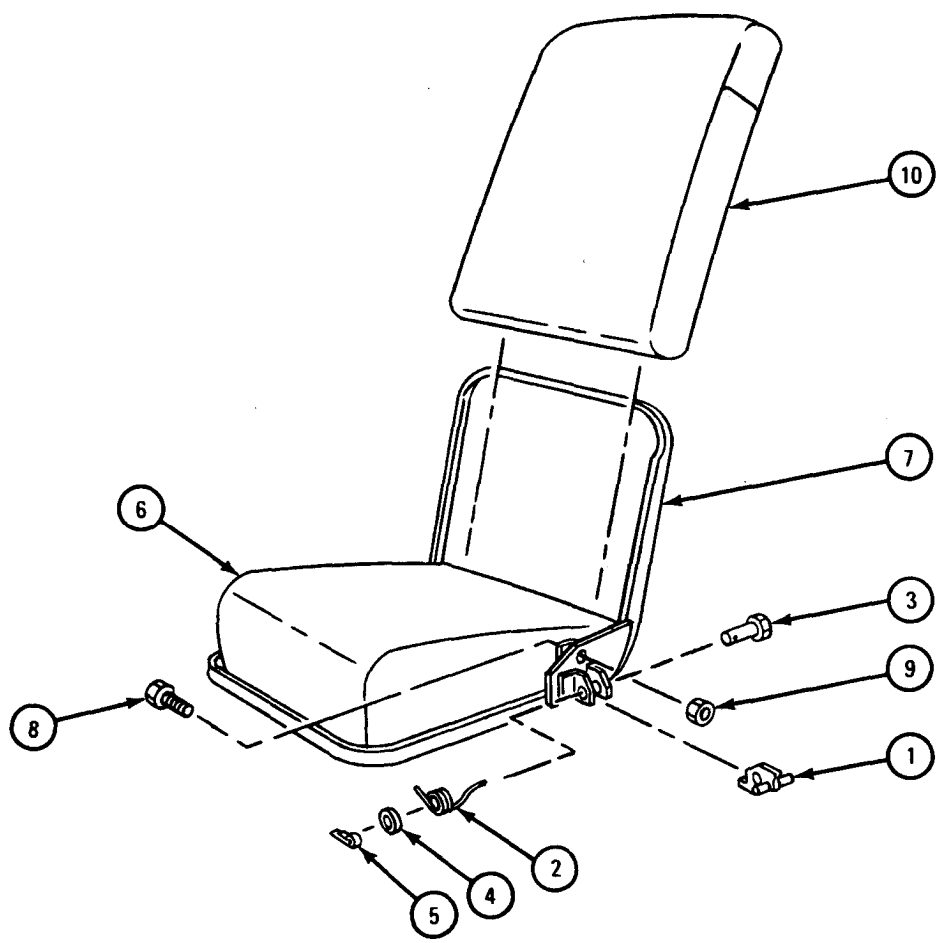

17-14. COMPANION SEAT (EARLY MODEL) REPAIR.

NOTE

Early model companion seat is bolted to driver's seat. Late models have legs bolted to the floor.

TOOLS: No special tools required

SUPPLIES: None

PERSONNEL: One

EQUIPMENT CONDITION: Truck parked, engine off, handbrake set.

a. Preliminary Procedures.

(1) Remove companion seat. Refer to TM 9-2320-209-20.

(2) Remove companion seat cushions. Refer to TM 9-2320-209-20.

b. Disassembly.

FRAME 1

1. Take out two cotter pins (1) and take off washer (2). Take out two pins (3).
2. Take off nut (4) and washer (5). Take out screw (6) and take off link assembly (7), spacer (8), and washer (9).

GO TO FRAME 2

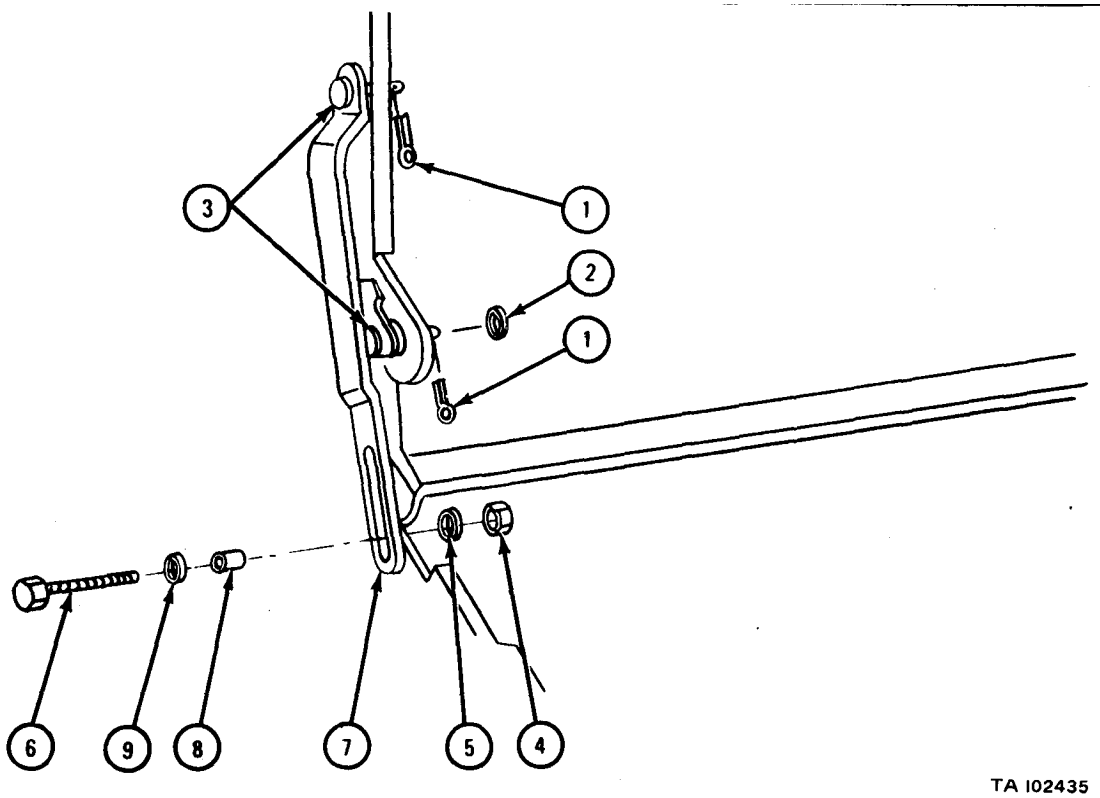

FRAME 2

1. Take out two cotter pins (1) and take off washer (2). Take out two pins (3). Take off frame assembly (4).
2. Take out two cotter pins (5). Take off Pin (6). Take off two link assemblies (7 and 8).

END OF TASK

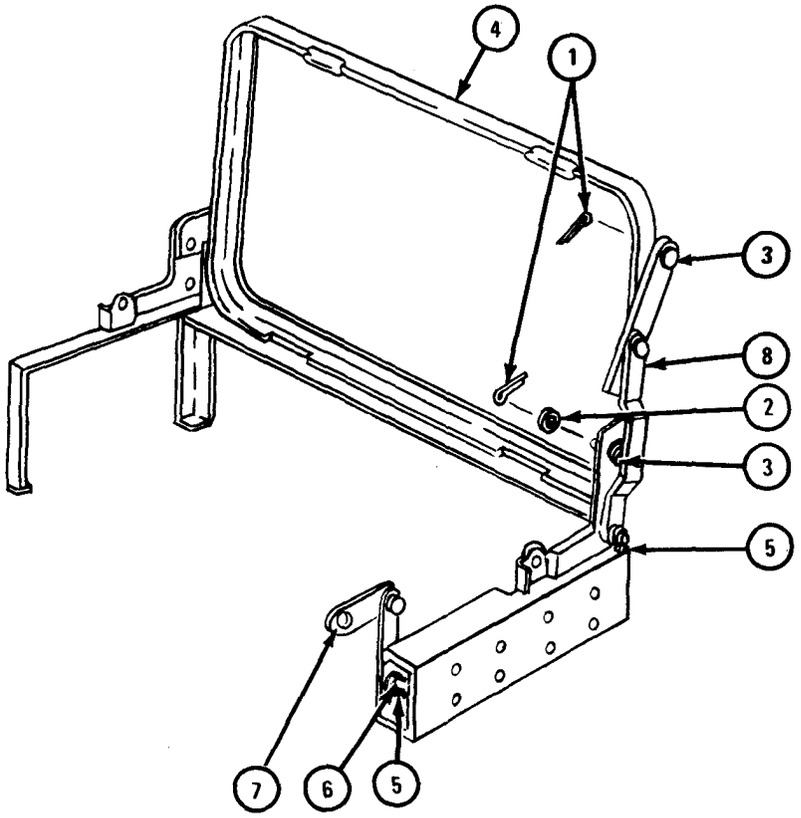

TA 102436

c. Cleaning. There are no special cleaning procedures needed. Refer to cleaning procedures given in Part 1, para 1-3.

d. Inspection and Repair.

FRAME 1

1. Check that seat frame (1) and backrest frame (2) are not bent or cracked. Repair by welding as needed. Refer to TM 9-237.
2. Check that link assemblies (3, 4, and 5) are not bent, worn, or damaged or cracked. Repair by welding or straightening as needed. Refer to TM 9-237 and FM 43-2.
3. If more repair is needed, get new parts.

END OF TASK

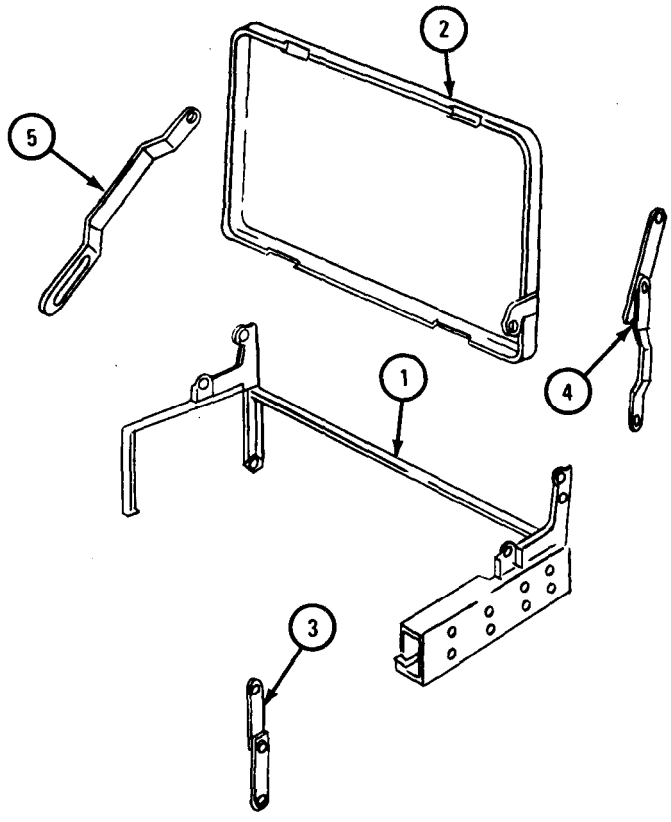

TA 102438

e. Assembly.

FRAME 1

1. Put link assemblies (1 and 2) in place. Put in pin (3).
2. Put in two cotter pins (4).
3. Put frame assembly (5) in place. Put in two pins (6) and put on washer (7).
4. Put in two cotter pins (8).

GO TO FRAME 2

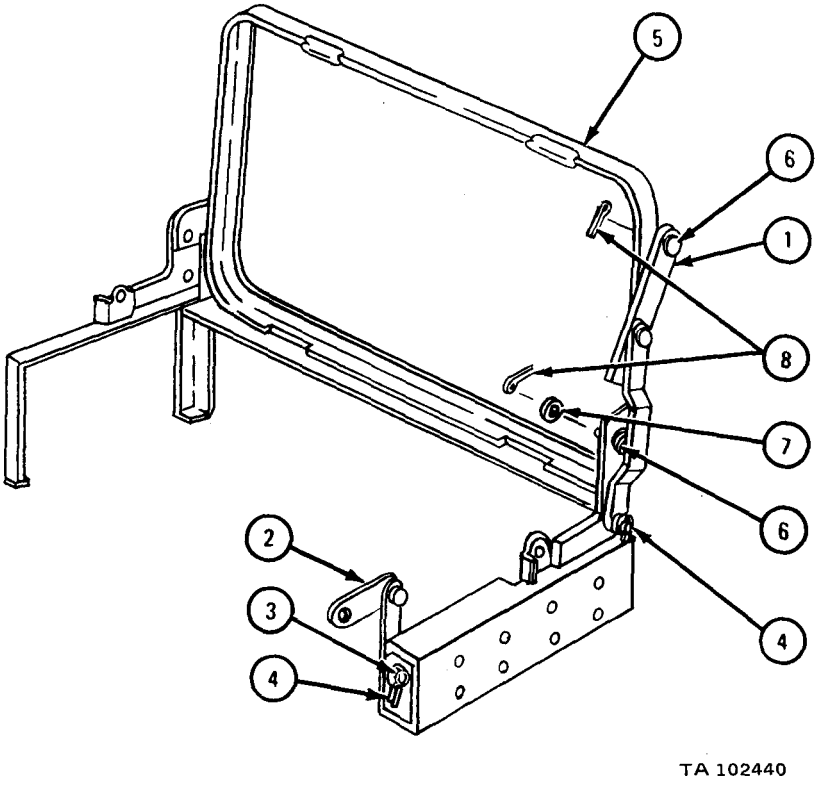

FRAME 2

1. Put washer (1), spacer (2) and link assembly (3) on screw (4). Put in screw.
2. Put on washer (5) and nut (6).
3. Put in two pins (7) and put on washer (8).
4. Put in two cotter pins (9).

NOTE

Follow-on Maintenance Action Required:

1. Replace companion seat assembly. Refer to TM 9-2320-209-20.
2. Replace cushions on seat assembly. Refer to TM 9-2320-209-20.

END OF TASK

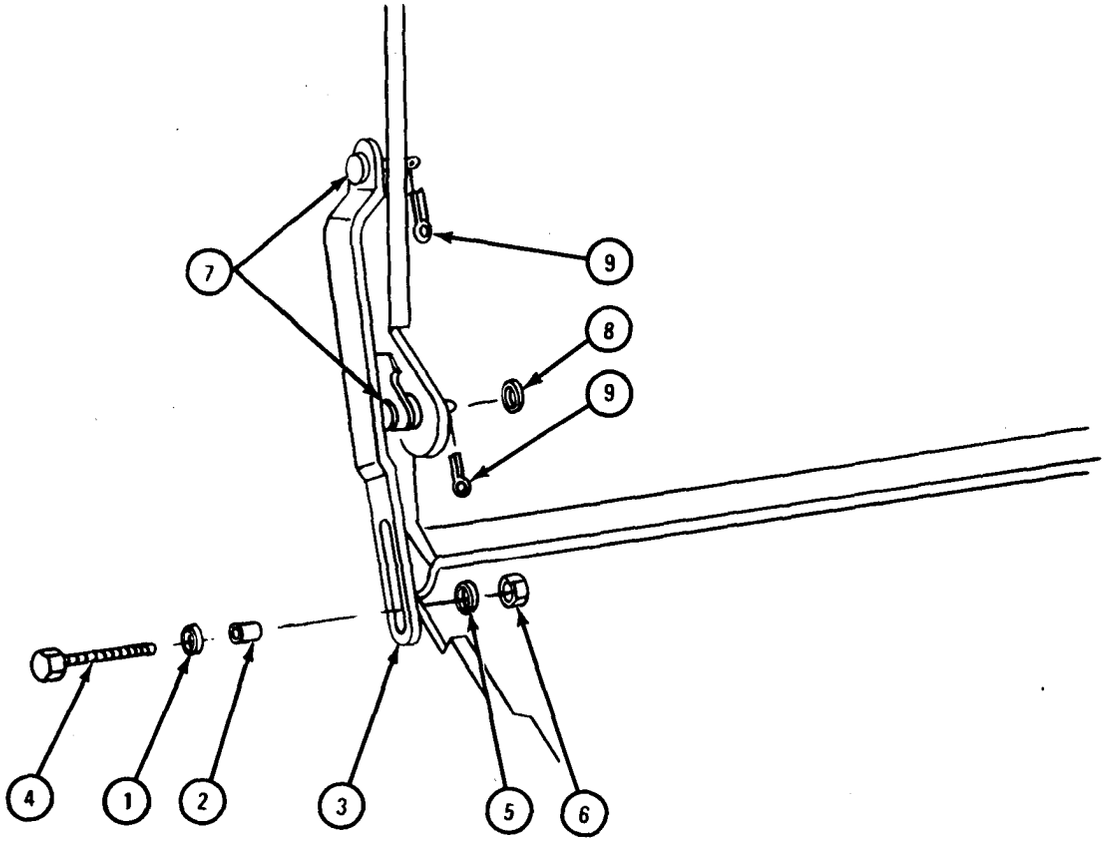

TA 102441

17-15. COMPANION SEAT (LATE MODELS) REPAIR.

TOOLS: No special tools required

SUPPLIES: Solvent, dry cleaning, type II (SD-2), Fed. Spec P-D-680
Cotter pin (6)

PERSONNEL: One

EQUIPMENT CONDITION: Truck parked, engine off, handbrake set.

a. Preliminary Procedures.

(1) Remove companion seat assembly. Refer to TM 9-2320-209-20.

(2) Remove cushions from companion seat assembly. Refer to TM 9-2320-209-20.

b. Disassembly.

FRAME 1

1. Take out two cotter pins (1) and take off two washers (2). Take out two pins (3).
2. Take off nut (4) with washer (5). Take out screw (6), spacer (7), and link assembly (8).

GO TO FRAME 2

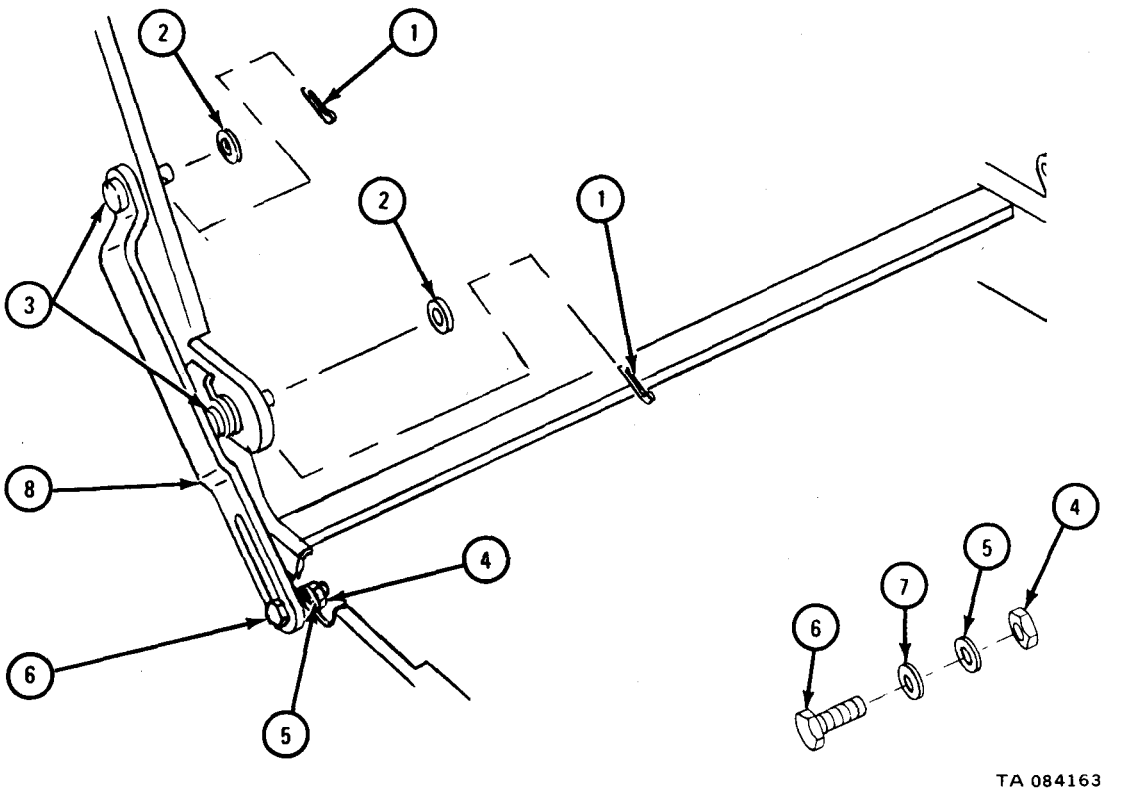

FRAME 2

1. Take out two cotter pins (1), two washers (2), and two pins (3). Take off frame assembly (4).
2. Take out two cotter pins (5), and two washers (6). Take out pin (7). Take off two link assemblies (8 and 9).

GO TO FRAME 3

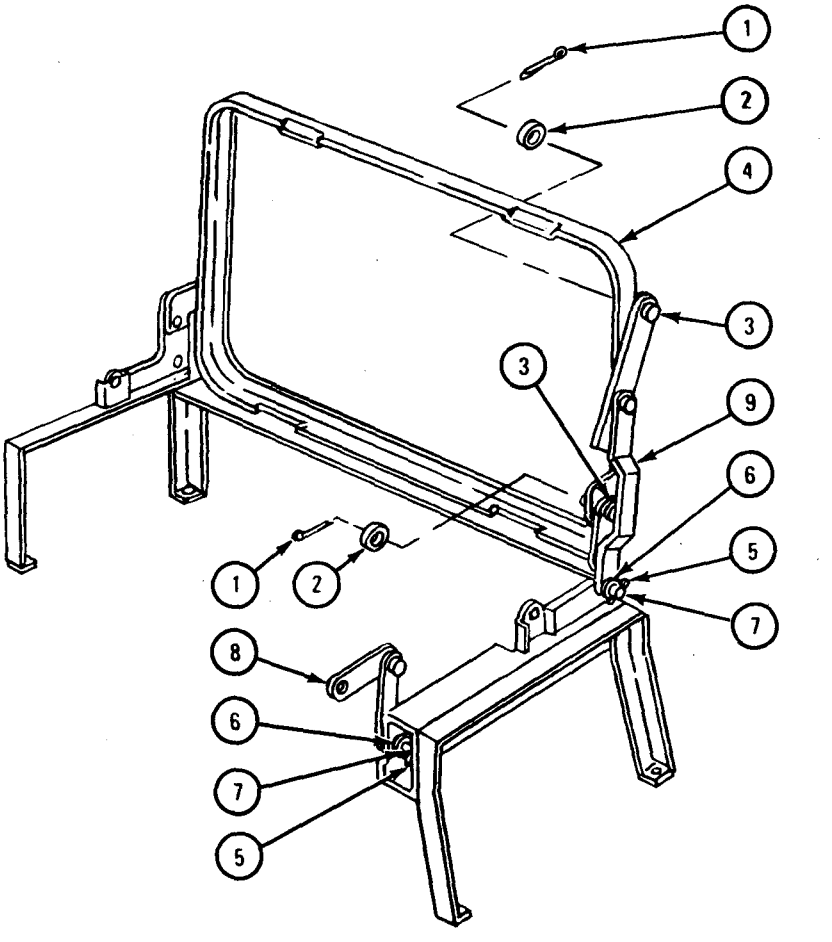

FRAME 3

1. Take off four nuts (1), Take out four screws (2) and take off leg assembly (3).

END OF TASK

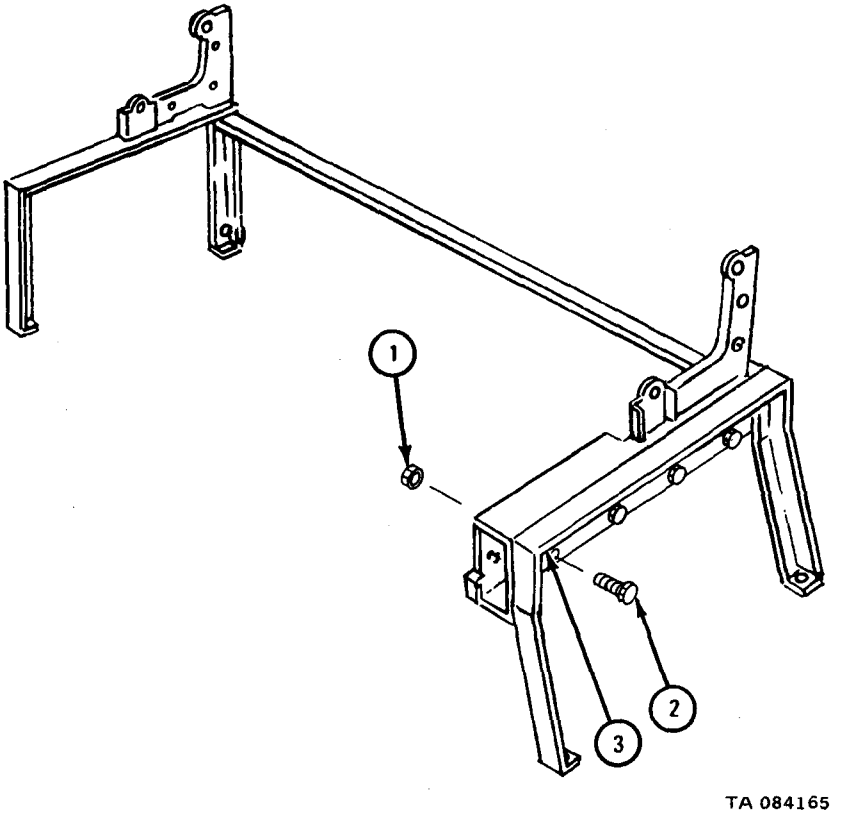

WARNING

Dry cleaning solvent is flammable. Do not use near an open flame. Keep a fire extinguisher nearby when solvent is used. Use only in well-ventilated places. Failure to do this may result in injury to personnel and damage to equipment.

c. Cleaning. Clean all metal parts with solvent.

d. Inspection and Repair.

FRAME 1

1. Check that seat frame (1), backrest frame (2), and leg assembly (3) are not bent or cracked. Get new parts or repair by welding as needed. Refer to TM 9-237.
2. Check that link assemblies (4, 5, and 6) are not bent, worn, damaged or cracked. Get new parts or repair by welding or straightening as needed. Refer to TM 9-237.
3. Check that seat cushion (7) and backrest cushion (8) have no tears or worn canvas. Refer to FM 43-3 for repair of damaged canvas.

END OF TASK

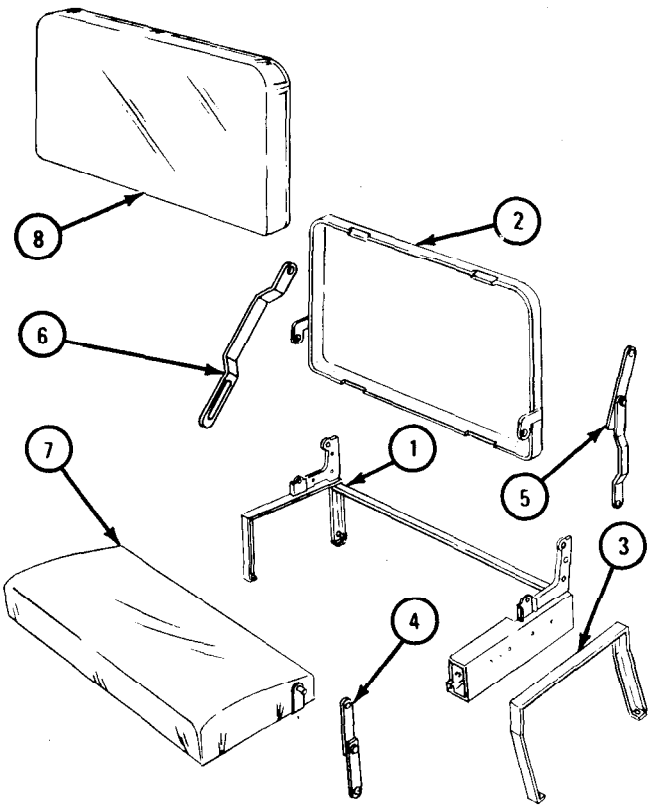

FRAME 1

1. Put leg assembly (1) in place on seat base (2). Line up holes and put four screws (3) in place.
2. Put on four nuts (4).

GO TO FRAME 2

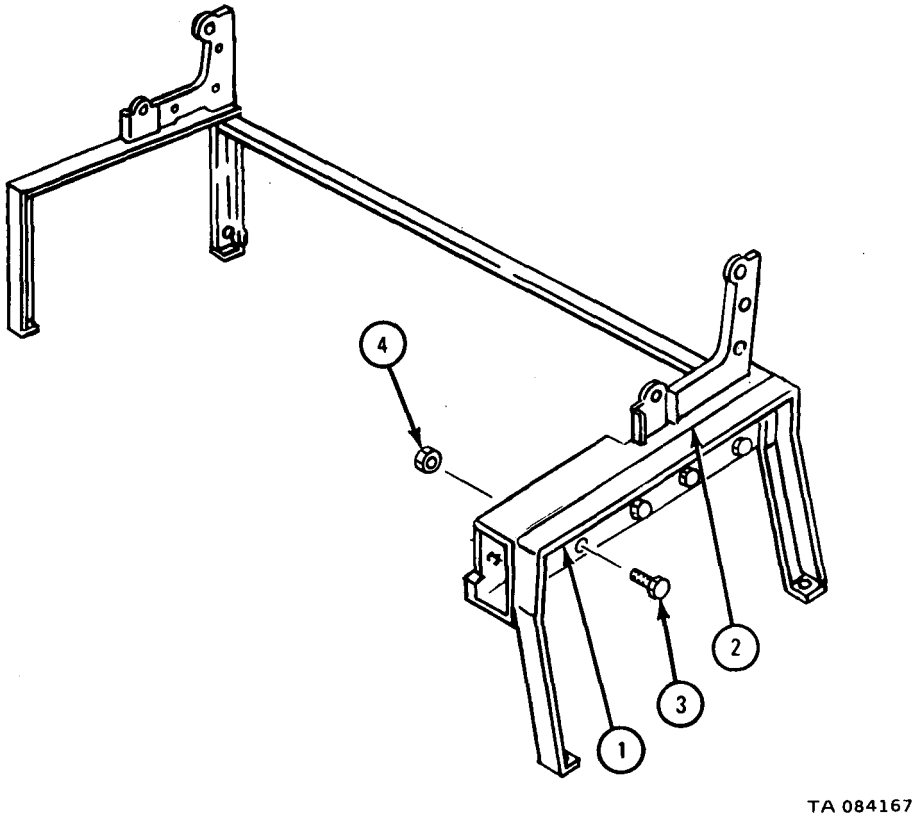

FRAME 2

1. Put link assembly (1) in place. Put in pin (2).
2. Put on washer (3). Put in cotter pin (4).
3. Do steps 1 and 2 again for link assembly (5).
4. Put frame assembly (6) in place. Put in two pins (7).
5. Put on two washers (8). Put in two cotter pins (9).

GO TO FRAME 3

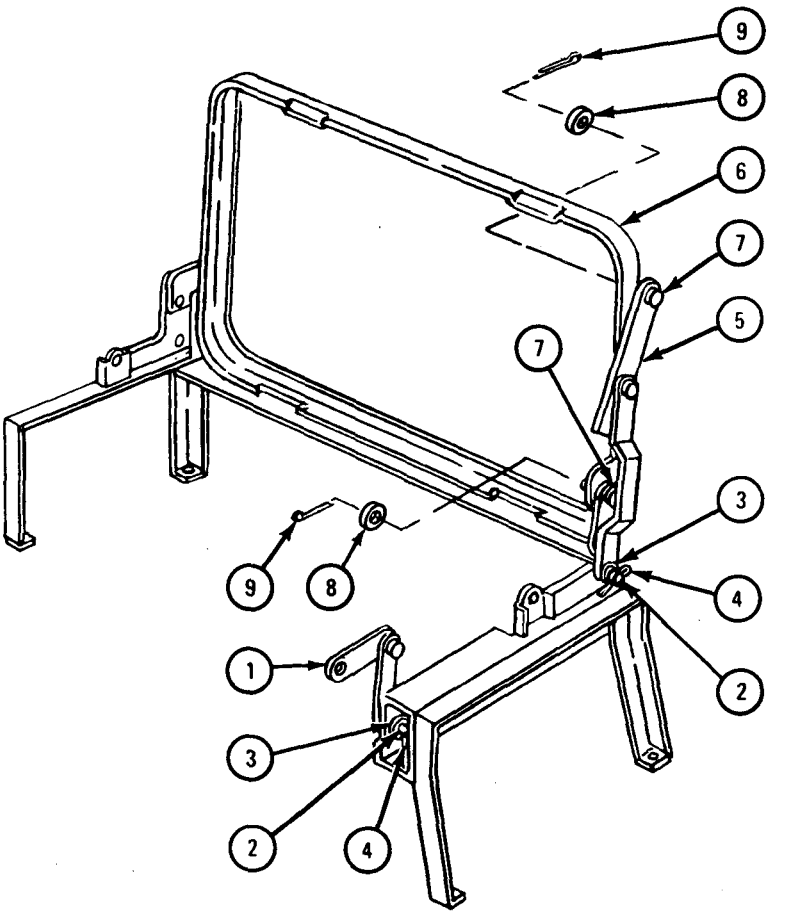

TA 084168

FRAME 3

1. Put washer (1), spacer (2), and link (3) on screw (4) and put screw in place.
2. Put on washer (5) and nut (6).
3. Put in two pins (7) and put on two washers (8).
4. Put in two cotter pins (9).

NOTE

Follow-on Maintenance Action Required:

1. Replace cushions on companion seat assembly. Refer to TM 9-2320-209-20.
2. Replace companion seat assembly. Refer to TM 9-2320-209-20.

END OF TASK

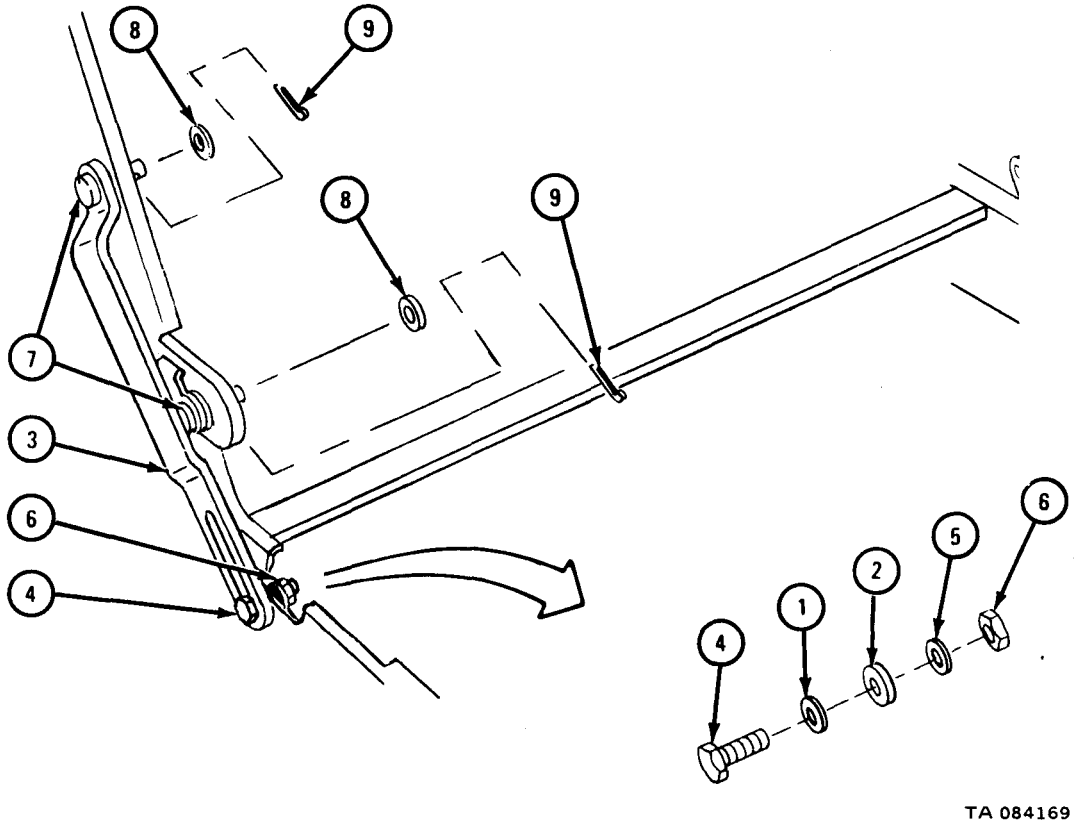

Section V. CARGO BODY COMPONENTS

17-16. CARGO BODY REMOVAL, REPAIR, AND REPLACEMENT (TRUCKS M35A1, M35A2, AND M36A2).

TOOLS: No special tools required.

SUPPLIES: Solvent, dry cleaning, type II (SD-2), Fed. Spec P-D-680
Clean rags

PERSONNEL: Two

EQUIPMENT CONDITION: Truck parked, engine off, handbrake set.

a. Preliminary Procedures.

(1) Remove paulin and bows. Refer to TM 9-2320-209-10.

(2) Remove troop seat, side racks, and end racks. Refer to TM 9-2320-209-10.

(3) Remove tailgate. Refer to TM 9-2320-209-20.

(4) Remove trailer electrical coupling receptacle. Refer to TM 9-2320-209-20.

(5) Remove spare wheel carrier. Refer to TM 9-2320-209-20.

(6) Remove splash shields. Refer to TM 9-2320-209-20.

(7) Remove pioneer tool set bracket. Refer to para 17-59.

b. Removal.

NOTE

If working on trucks M35A1 or M35A2, do frame 1.
If working on truck M36A2, go to frame 2.

FRAME 1

1. Take out two screws and washers (1), springs (2), and nuts (3).
2. Take out three screws (4), washers (5), and nuts (6).
3. Do steps 1 and 2 again on other side of body (7).
4. If working on trucks M35A1 or M35A2, take off four nuts (8), two brackets (9), and two U-bolts (10).
5. Do step 4 again on other side of body (7).

GO TO FRAME 2

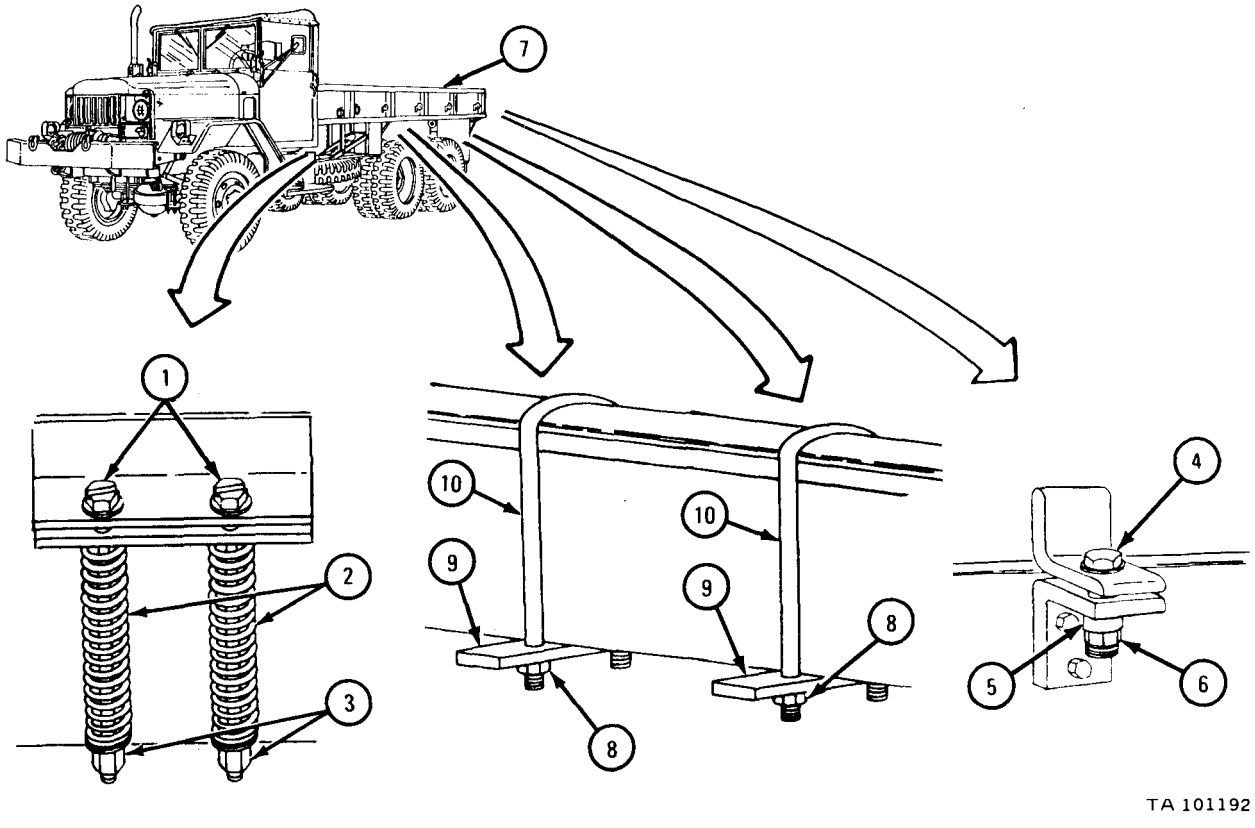

FRAME 2

1. Take out two screws and washers (1), springs (2), and nuts (3).
2. Take out three screws (4), washers (5), and nuts (6).
3. Take out two screws (7), washers (8), and nuts (9).
4. Do steps 1, 2, and 3 again on other side of body (10).

GO TO FRAME 3

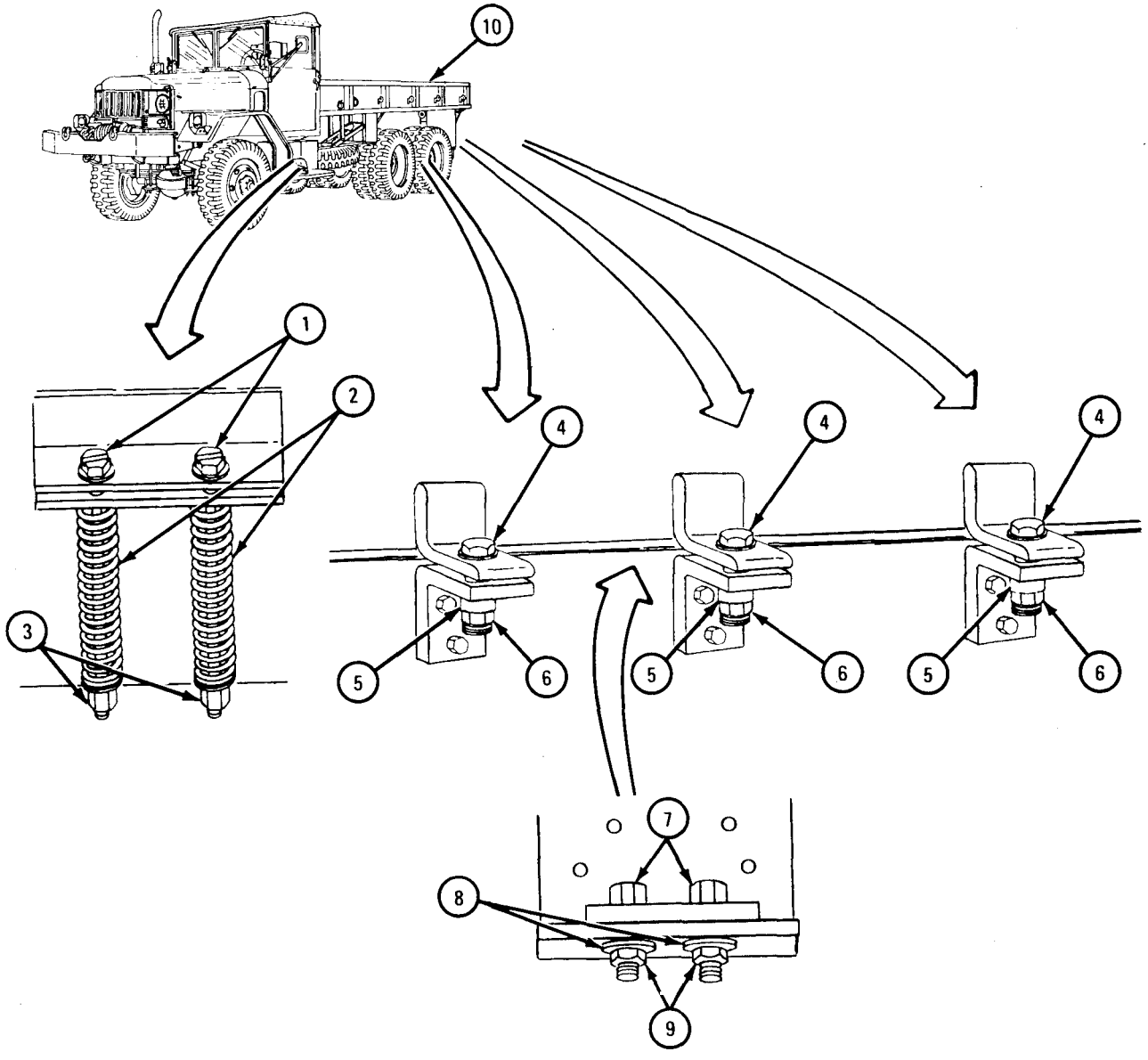

FRAME 3

1. Put two chains (1) around body (2) and join them to hoisting equipment as shown.

Soldier A 2. Guide body (2) off truck and onto wood blocks as Soldier B lifts body.

Soldier B 3. Using hoisting equipment, lift body (2) off truck and onto wood blocks.

4. Unhook two chains (1) from body.

END OF TASK

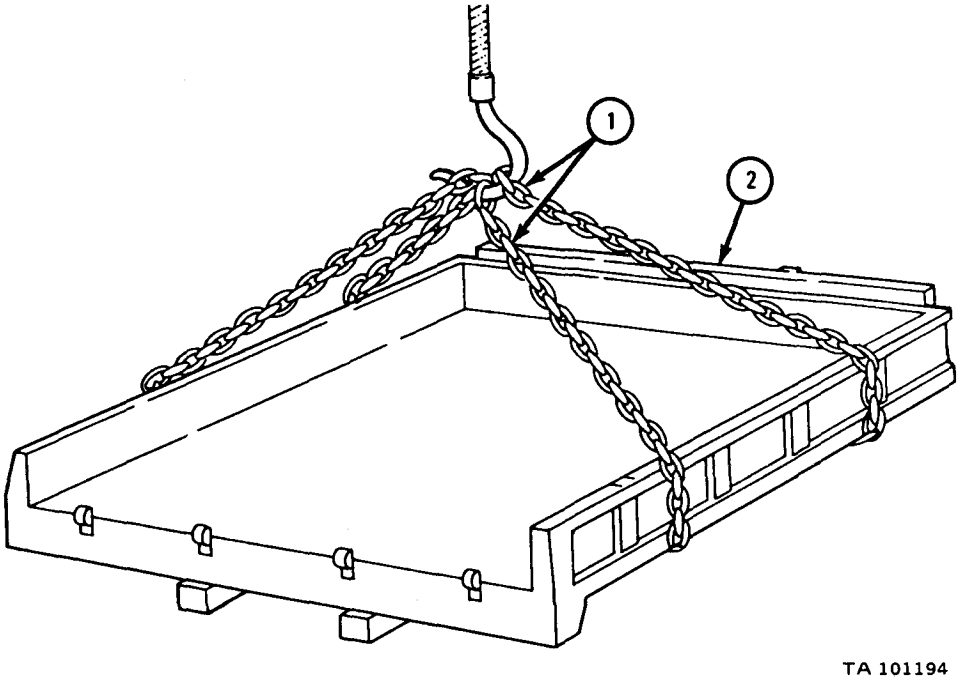

TA 101194

c. Cleaning. There are no special cleaning procedures needed. Refer to cleaning procedures given in Part 1, para 1-3.

d. Inspection and Repair.

FRAME 1

1. Check that body (1) is not bent, dented, cracked, and that it has no broken welds. Straighten bent or dented parts. Refer to FM 43-2. Weld tears or cracks. Refer to TM 9-237.
2. Check that nuts (2), bolts (3) and U-bolt (4) are not cracked or damaged and that they do not have any stripped threads. If parts are damaged, get new ones.
3. Check that two springs (5) and bracket (6) are not cracked, bent, or damaged Straighten bent or dented parts. Refer to FM 43-2. Weld tears or cracks. Refer to TM 9-237.
4. If more repair is needed, get new parts.

END OF TASK

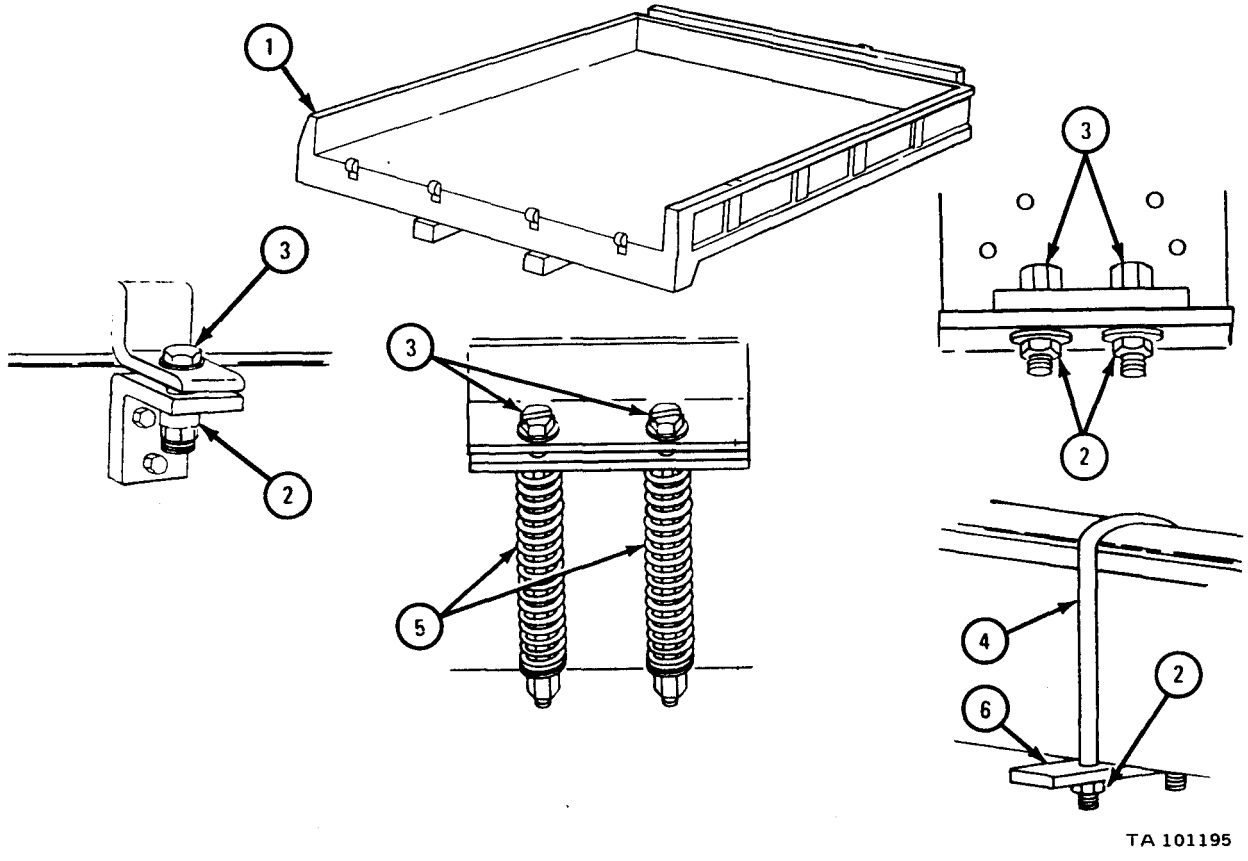

e. Replacement.

FRAME 1

1. Put two chains (1) around body (2) and join chains to hoisting equipment as shown.

Soldier A 2. Guide body (2) into place on truck as Soldier B lifts body.

Soldier B 3. Using hoisting equipment, lift body (2) onto truck, alining holes.

4. Unhook two chains (1) from body (2).

IF WORKING ON TRUCK M36A2, GO TO FRAME 2.
IF WORKING ON TRUCKS M35A1 OR M35A2C, GO TO FRAME 3.

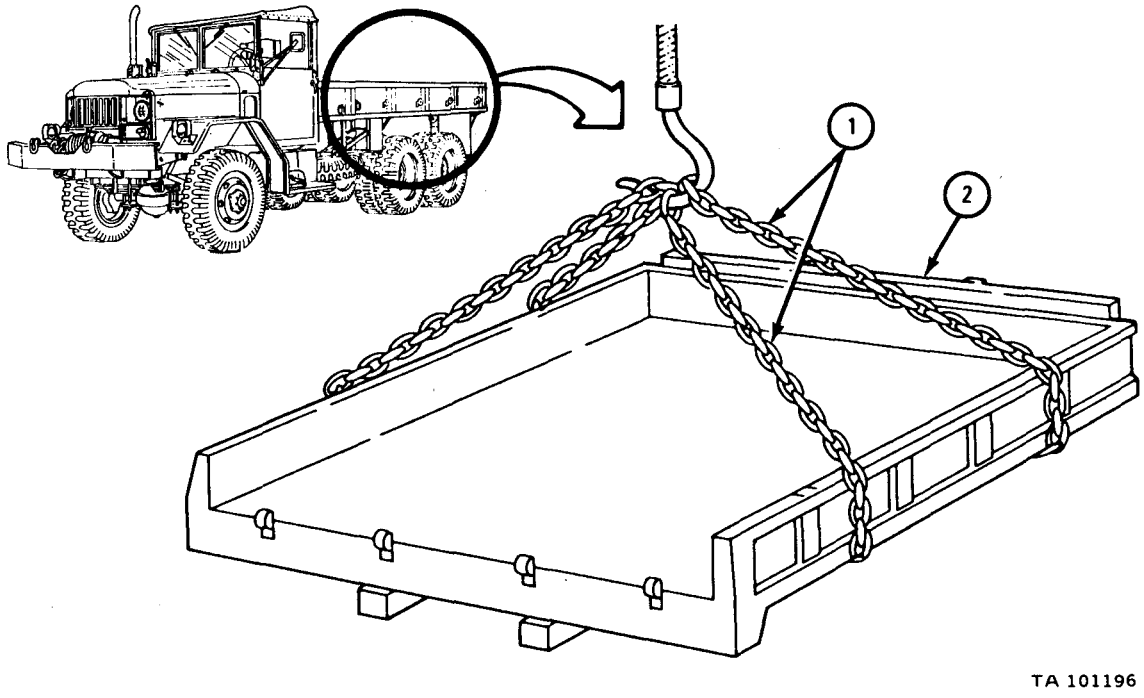

FRAME 2

1. Put in two springs (1) and screws and washers (2) and put on nuts (3).
2. Put in three screws (4) and put on three washers (5) and nuts (6).
3. Do steps 1 and 2 again on other side of body (7).
4. Put in two screws (8), washers (9), and nuts (10).
5. Do step 4 again on other side of body (7).

GO TO FRAME 4

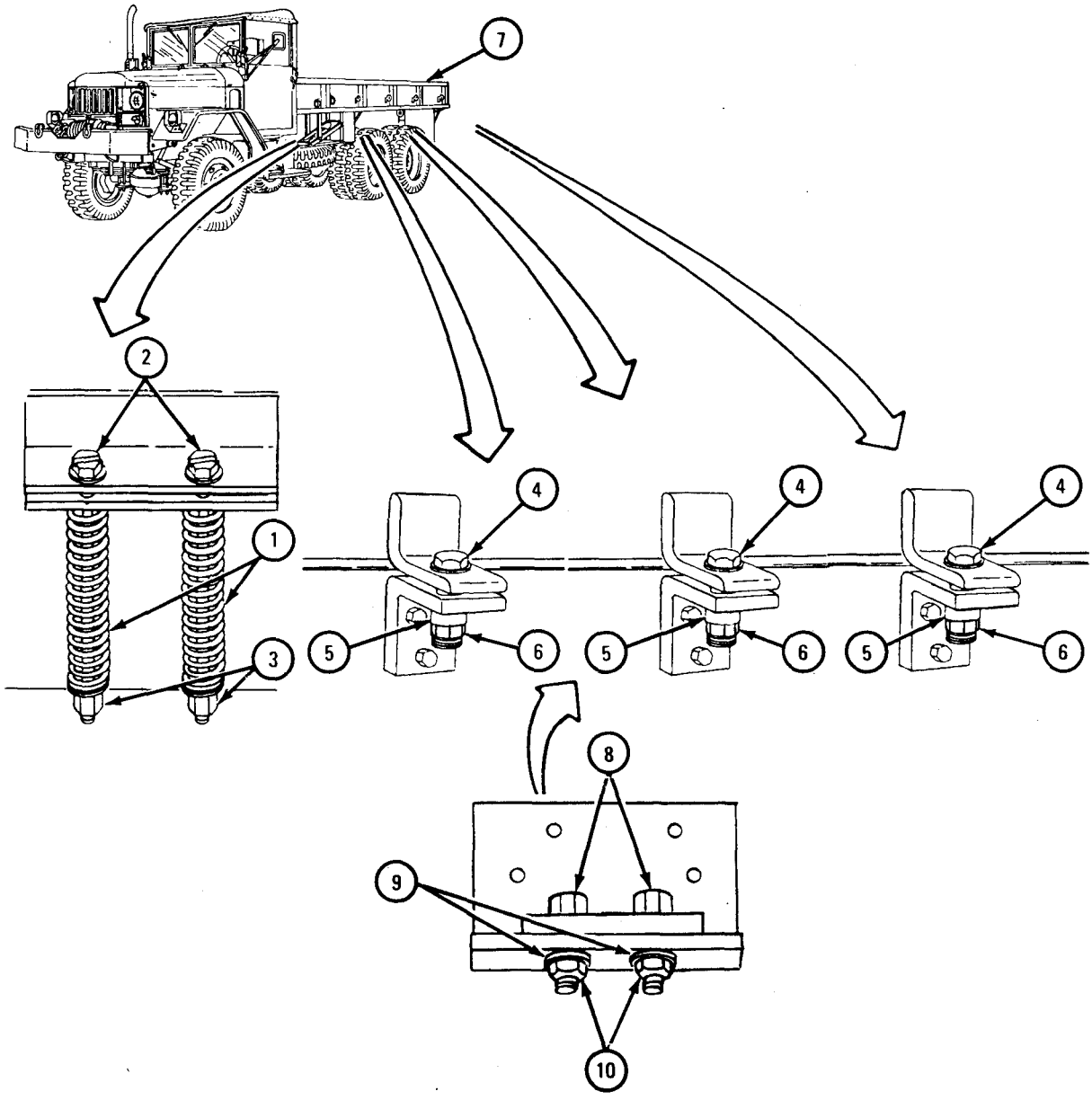

TA 101197

FRAME 3

1. Put in three screws (1) and put on three washers (2) and nuts (3).
2. Put on two U-bolts (4), two brackets (5), and four nuts (6).
3. Put in two springs (7), screws and washers (8) and put on nuts (9).
4. Do steps 1, 2, and 3 again on other side of cargo body (10).

GO TO FRAME 4

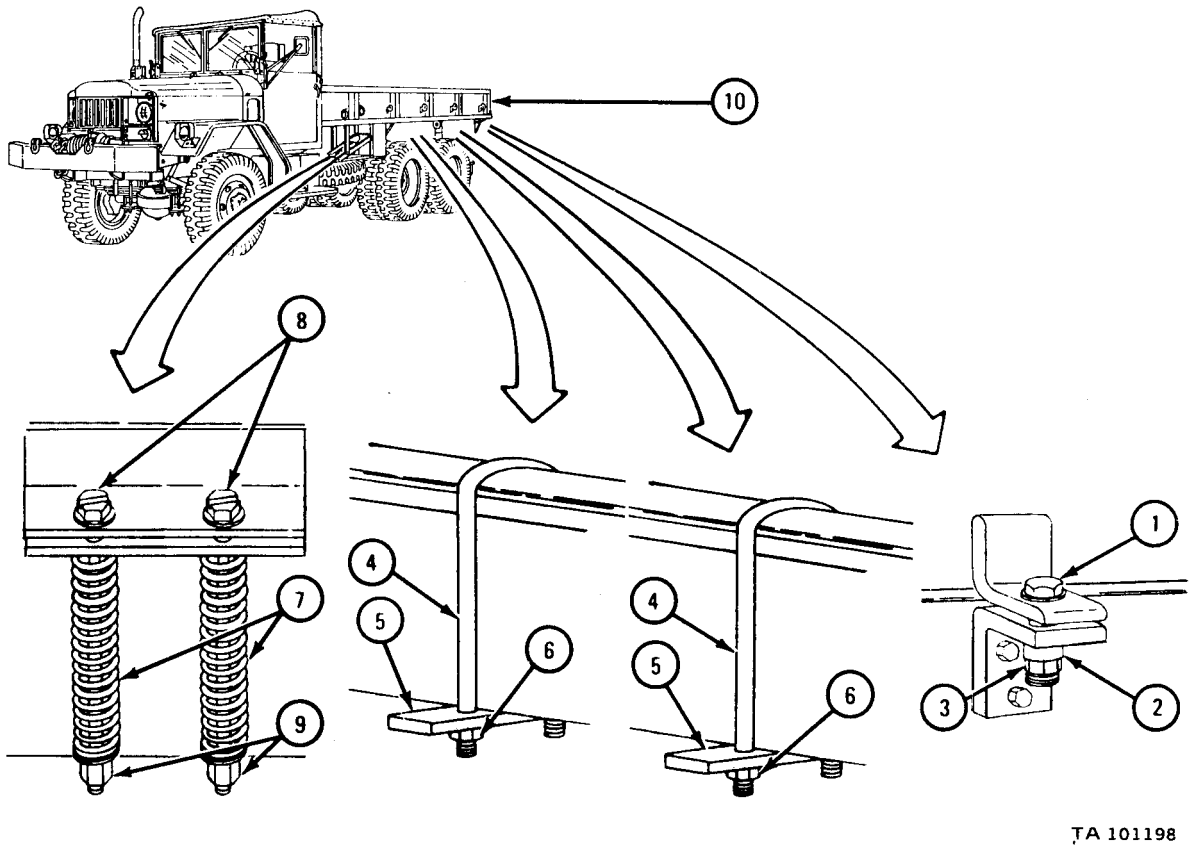

FRAME 4

NOTE

Follow-on Maintenance Action Required:

1. Replace pioneer tools set bracket. Refer to para 17-59.
2. Replace splash shields. Refer to TM 9-2320-209-20.
3. Replace spare wheel carrier. Refer to TM 9-2320-209-20.
4. Replace trailer electrical coupling receptacle. Refer to TM 9-2320-209-20.
5. Replace tailgate. Refer to TM 9-2320-209-20.
6. Put on troop seat, side racks, and end racks. Refer to TM 9-2320-209-10.
7. Put on paulin and bows. Refer to TM 9-2320-209-10.

END OF TASK

17-17. CARGO BODY TAILGATE REPAIR (TRUCK M35A1).

TOOLS: No special tools required

SUPPLIES: Rivets (4)

PERSONNEL: One

EQUIPMENT CONDITION: Truck parked, engine off, handbrake set.

a. Preliminary Procedure. Remove tailgate. Refer to TM 9-2320-209-20.

b. Disassembly.

FRAME 1

1. Take out two screws (1) and take off two nuts (2).
2. Take step (3) off tailgate (4).
3. Do steps 1 and 2 again on other side of tailgate (4).
4. Take out and throw away two rivets (5).
5. Take hook (6) off tailgate (4).
6. Do steps 4 and 5 again on other side of tailgate (4).

END OF TASK

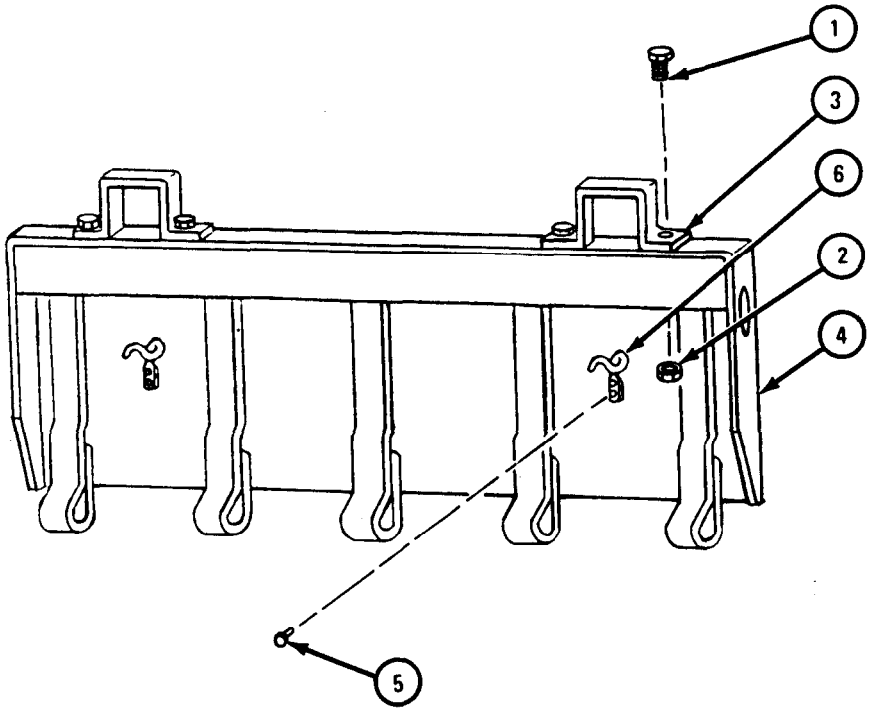

c. Cleaning. There are no special cleaning procedures needed. Refer to cleaning procedures given in Part 1, para 1-3.

d. Inspection and Repair.

FRAME 1

1. Check that tailgate (1), two steps (2), and two hooks (3) are not bent, dented, cracked, torn or damaged.
2. Straighten bent or dented parts. Refer to FM 43-2. Weld tears or cracks. Refer to TM 9-237. If more fixing is needed, get new parts.
3. Check that paint on tailgate (1) is not chipped or cracked and that there is no bare metal. Repaint as needed. Refer to TM 43-0139.

END OF TASK

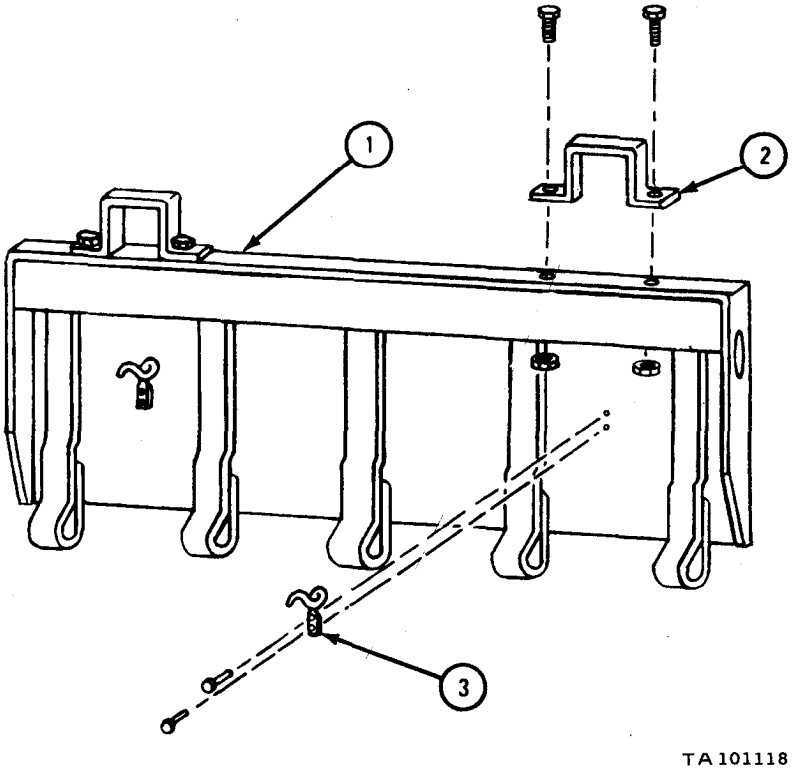

e. Assembly.

FRAME 1

1. Put hook (1) on tailgate (2) and put in two rivets (3).
2. Do step 1 again on other side of tailgate (2).
3. Put step (4) on tailgate (2).
4. Put in two screws (5) and put on nuts (6).
5. Do step 3 again on other side of tailgate (2).

NOTE

Follow-on Maintenance Action Required:
Replace tailgate. Refer to TM 9-2320-209-20.

END OF TASK

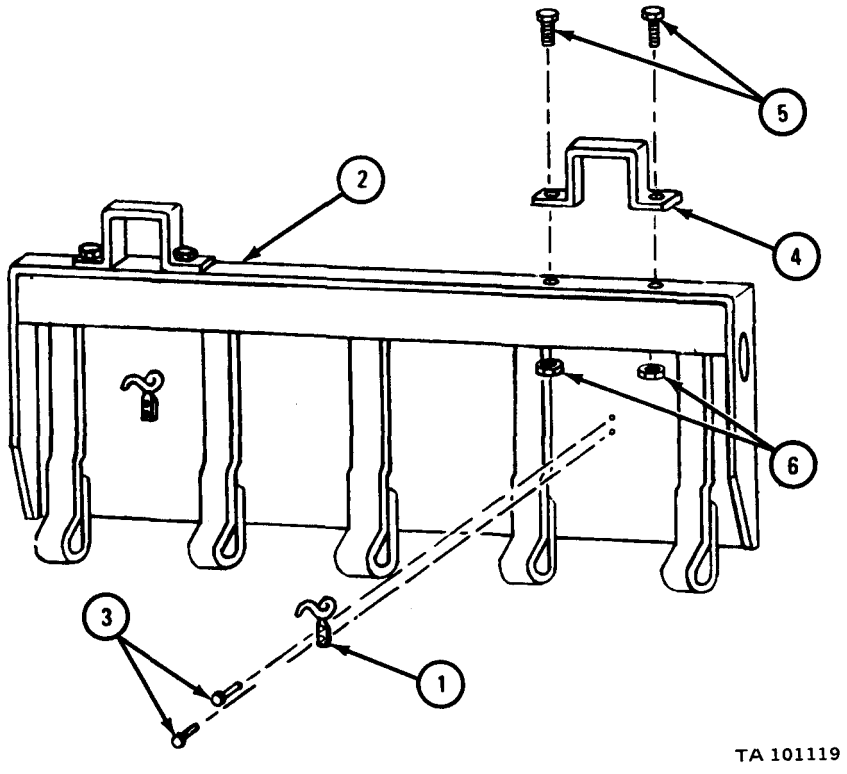

17-18. CARGO BODY TAILGATE REPAIR (TRUCK M35A2C).

TOOLS: No special tools required

SUPPLIES: Solvent, dry cleaning, type II (SD-2), Fed. Spec P-D-680
Clean rags
Support hook rivet (4)
Data plate rivet (4)

PERSONNEL: One

EQUIPMENT CONDITION: Truck parked, engine off, handbrake set.

a. Preliminary Procedure. Remove tailgate. Refer to TM 9-2320-209-20.

b. Disassembly

FRAME 1

1. Cut open chain link (1) and take off chain.
2. Take off canvas cover (2).
3. Take off two nuts (3) and take out two screws (4).
4. Take off step (5).
5. Take out bar (6).
6. Do steps 1 through 5 again on other side of tailgate.

Go TO FRAME 2

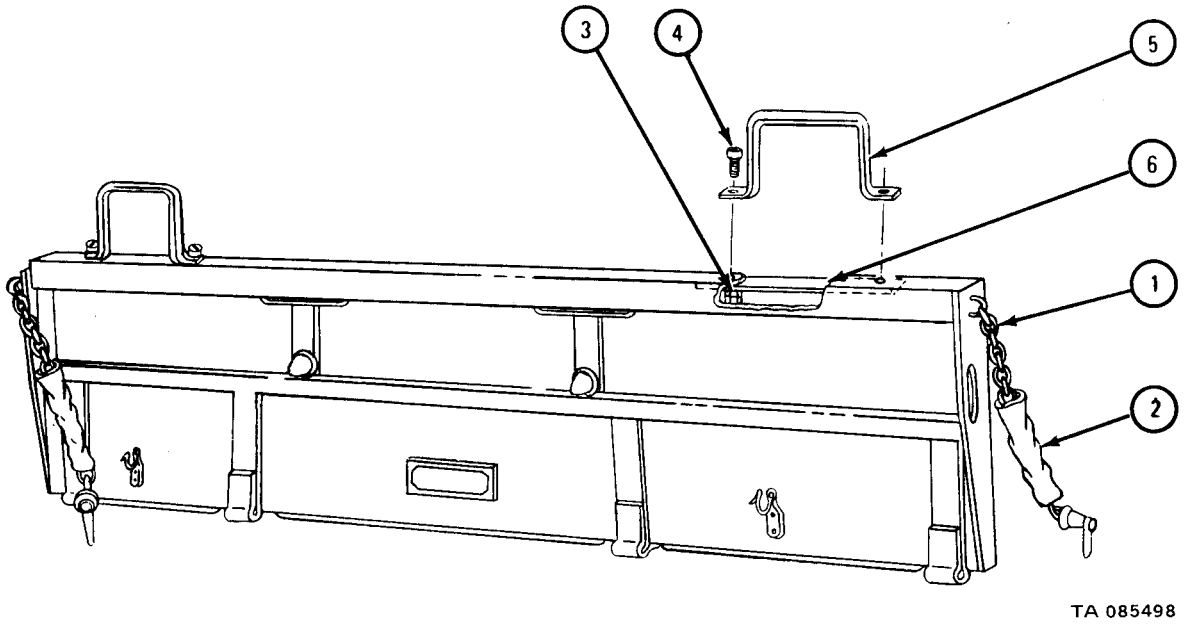

FRAME 2

1. Take out four rivets (1) and throw them away.
2. Take off two hooks (2).
3. Take off two nuts (3) and two rubber bumpers (4).
4. Take out four rivets (5) and throw them away.
5. Take off data plate (6).

END OF TASK

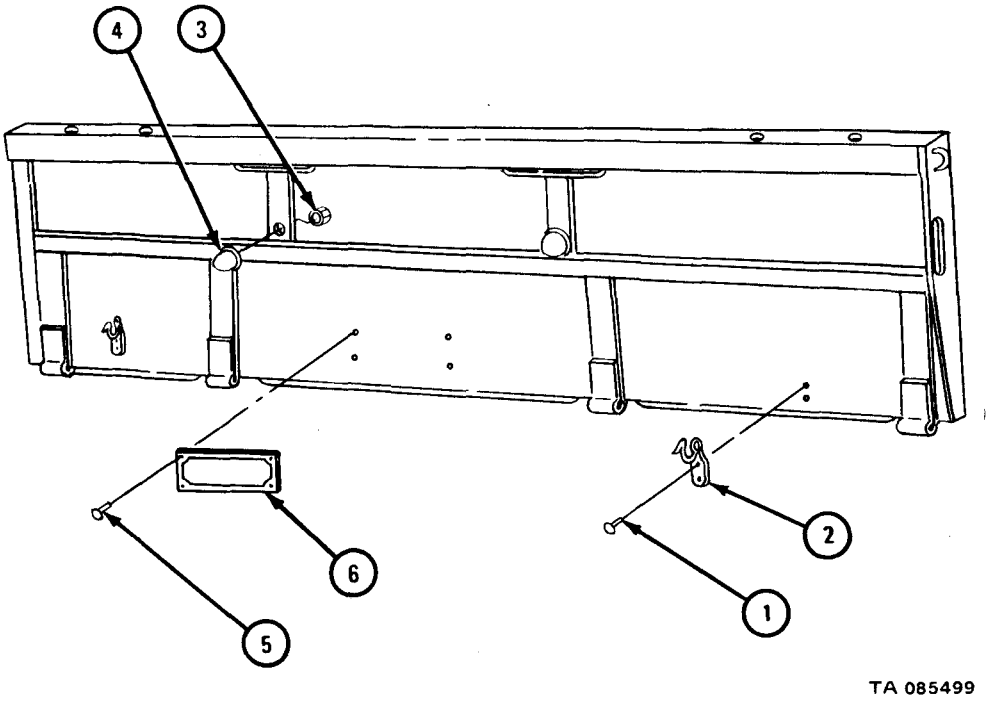

WARNING

Dry cleaning solvent is flammable. Do not use near an open flame. Keep a fire extinguisher nearby when solvent is used. Use only in well-ventilated places. Failure to do this may result in injury to personnel and damage to equipment.

c. Cleaning.

(1) Clean all parts with dry cleaning solvent.

(2) Dry parts with clean rags.

d. Inspection and Repair.

FRAME 1

1. Check that two chains (1), steps (2), bars (3), and hooks (4) are not bent, cracked or damaged. Fix damage by straightening or welding. Refer to TM 9-237. If more fixing is needed, get new parts.

2. Check that data plate (5), two rubber bumpers (6), and tailgate (7) are not bent, cracked or damaged. Fix damage by straightening or welding. Refer to TM 9-237. If more fixing is needed, get new parts.

END OF TASK

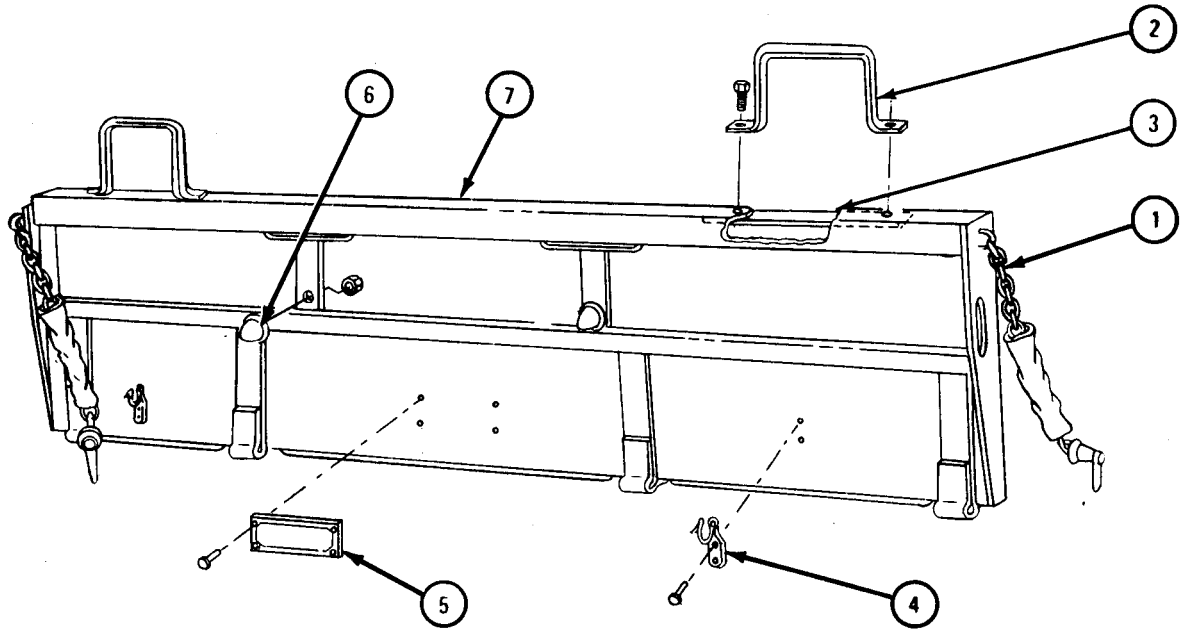

NOTE: CHECK ONLY THOSE PARTS WHICH ARE CALLED OUT. PARTS WITHOUT CALLOUTS ARE SHOWN ONLY FOR REFERENCE PURPOSES.

TA 085500

e. Assembly.

FRAME 1

1. Put plate (1) inplace.
2. Put in four rivets (2).
3. Put two rubber bumpers (3) in place and put on two nuts (4).
4. Put hook (5) in place.
5. Put in two rivets (6).
6. Do steps 4 and 5 again for other hook (5).

Go TO FRAME 2

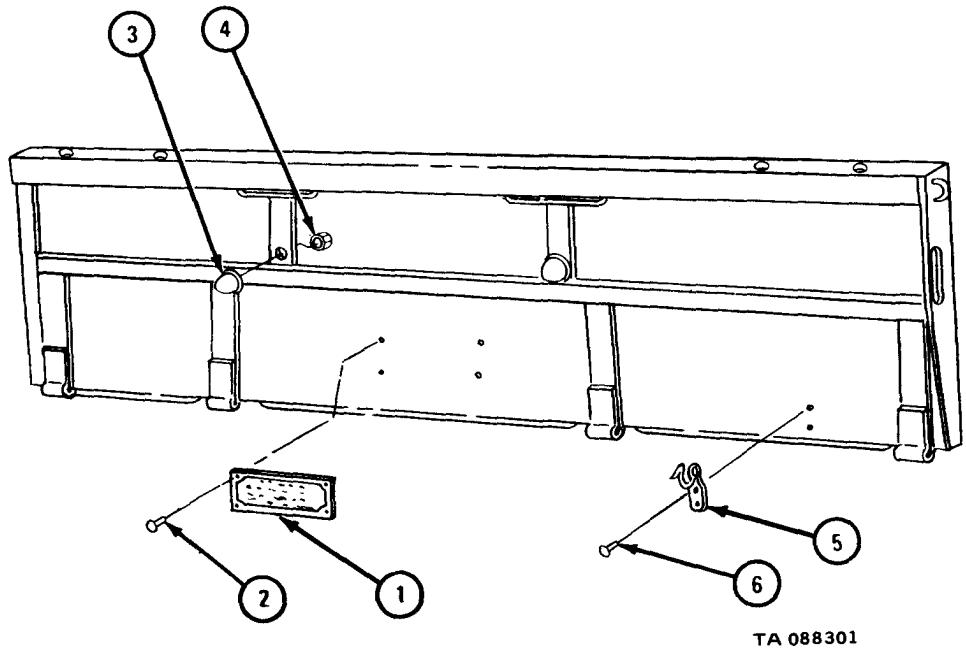

FRAME 2

1. Put bar (1) in place.
2. Put step (2) in place.
3. Put in two screws (3) and put on two nuts (4).
4. Put canvas cover (5) on chain (6).
5. Put chain (6) in place and weld closed.
6. Do steps 1 through 5 on other side of tailgate.

NOTE

Follow-on Maintenance Action Required:
Replace tailgate. Refer to TM 9-2320-209-20.

END OF TASK

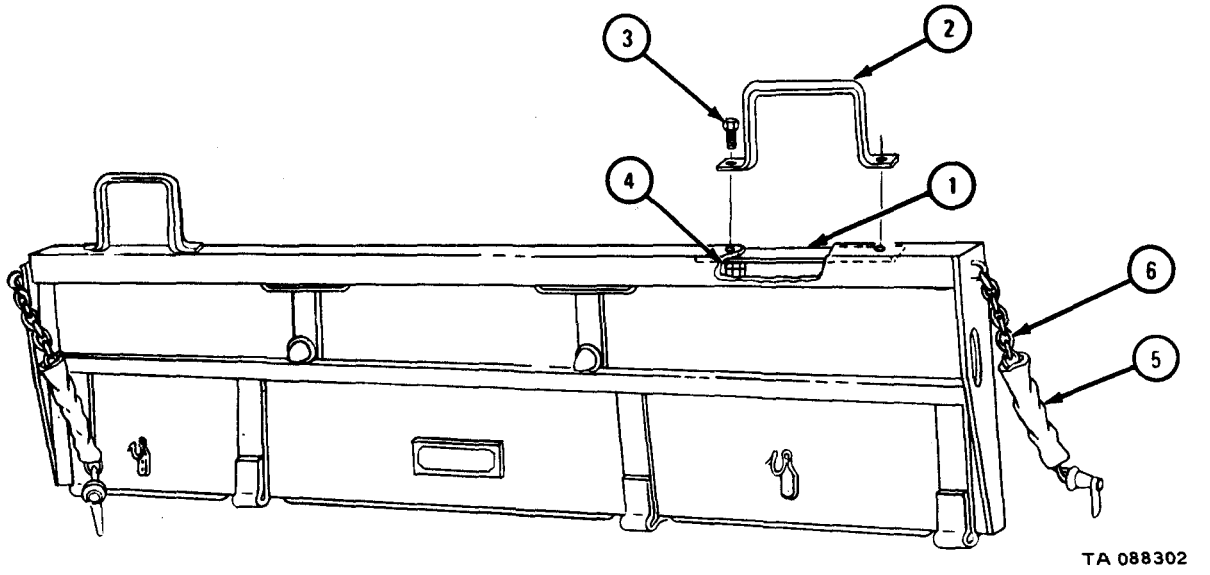

Section VI. TANK BODY COMPONENTS

17-19. PUMP COMPARTMENT DOOR REMOVAL, REPAIR, AND REPLACEMENT (TRUCKS M49A1C AND M49A2C).

TOOLS: No special tools required

SUPPLIES: None

PERSONNEL: Two

EQUIPMENT CONDITION: Truck parked, engine off, handbrake set.

a. Removal.

FRAME 1

NOTE

This task is the same for the left and right pump compartment doors. This task is shown for the left pump compartment door.

Soldier A 1. Open pump compartment doors (1).

2. Take out three screws (2) and take off nuts (3).

Soldier B 3. Hold pump compartment door (1) in place.

Soldier A 4. Take out 10 screws (4) and nuts (5).

Soldiers A and B 5. Take off pump compartment door (1).

END OF TASK

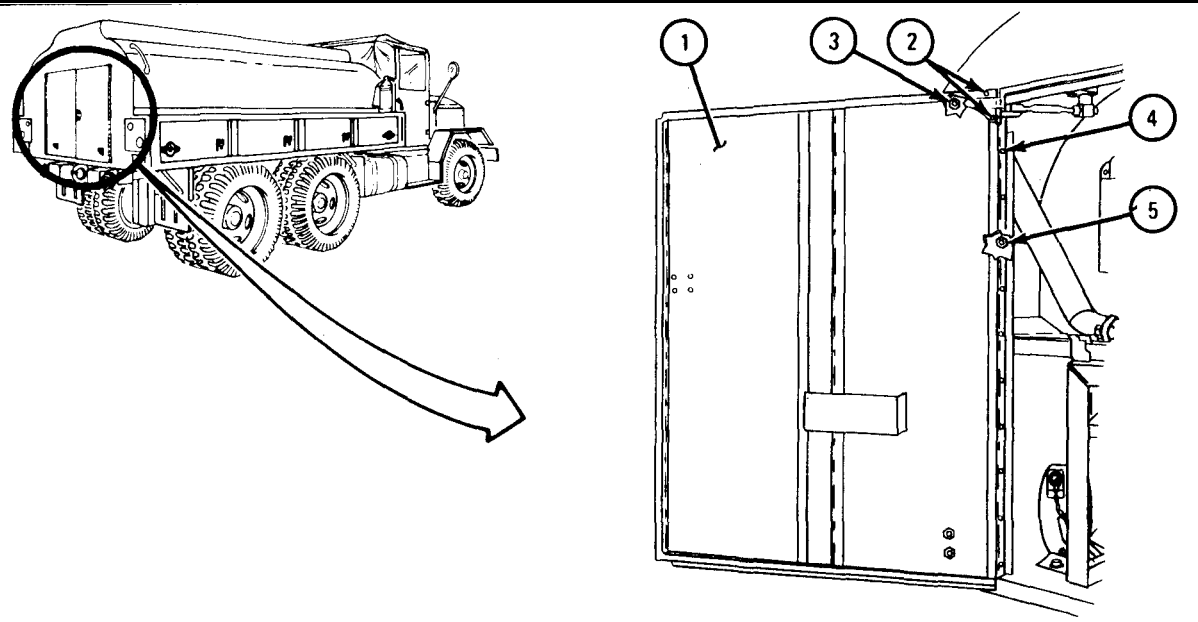

b. Disassembly.

NOTE

If working on left pump compartment door, do frame 1. If working on right pump compartment door, go to frame 2.

FRAME 1

Soldier A 1. Take off two nuts (1).

Soldier B 2. Take out two screws (2).

3. Take off lashing hook (3).

END OF TASK

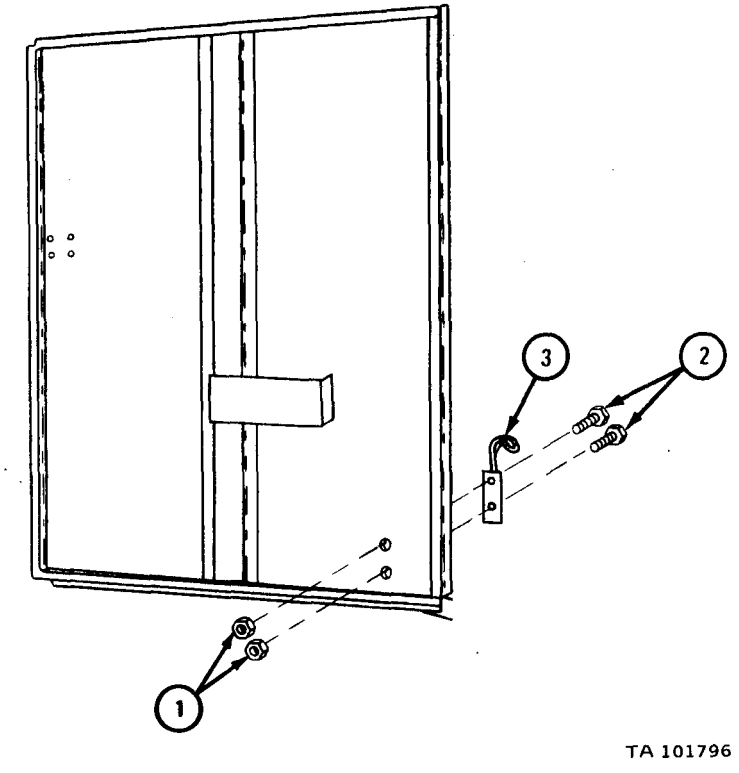

FRAME 2

Soldier A 1. Take off two nuts (1).

Soldier B 2. Take out two screws (2) and take off lashing hook (3).

3. Take out four screws (4).

4. Take off caution plate (5).

5. Take out four screws (6).

6. Take off instruction plate (7).

GO TO FRAME 3

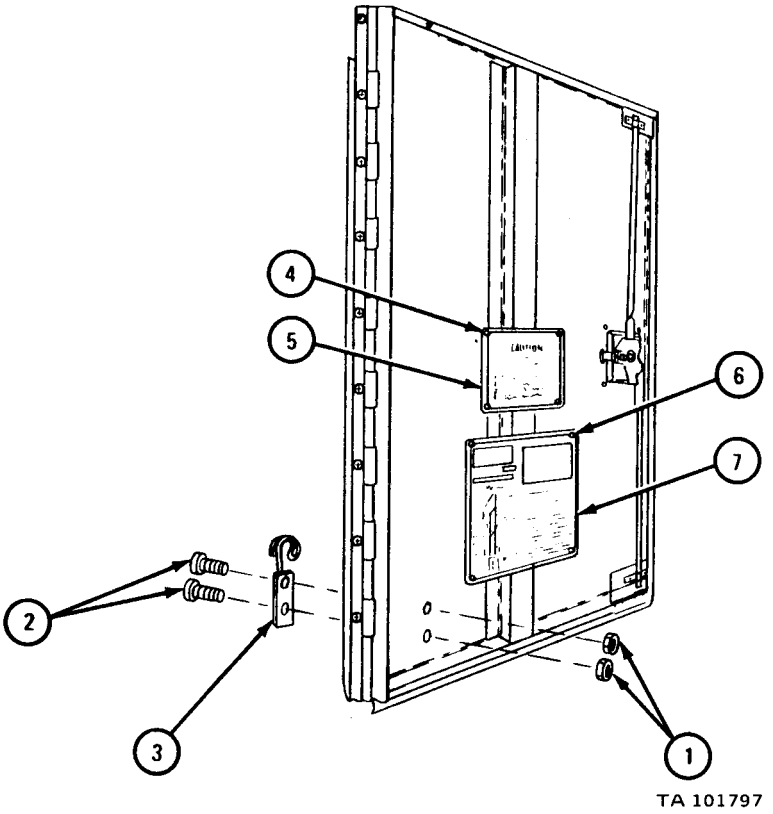

FRAME 3

Soldier A 1.	Hold latch rod (1).
Soldier B 2.	Take out two screws (2) and nuts (3). Take off latch rod guide (4).
Soldier A 3.	Take off latch rod (1).
Soldiers A and B 4.	Do steps 1 through 3 again for other latch rod (5).

GO TO FRAME 4

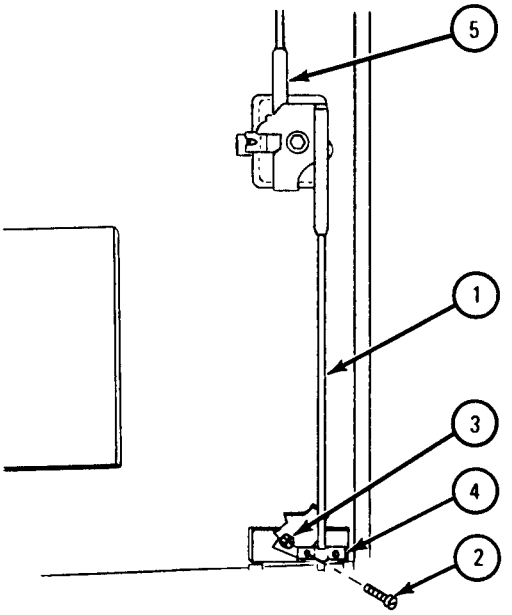

TA 101798

FRAME 4

1. Take off nut (1). Take out lock cylinders (2).
2. Take out four rivets (3). Takeoff door latch (4).

END OF TASK

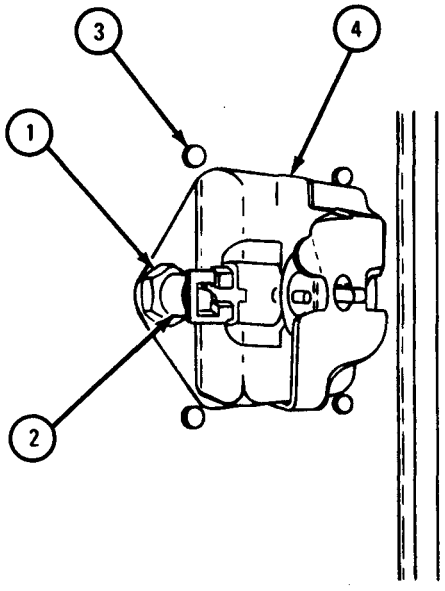

TA 101799

There are no special cleaning procedures needed. Refer to cleaning procedures given in Part 1, para 1-3.

NOTE

Clean all parts before inspection and before assembly.

d. Inspection and Repair.

FRAME 1

1. Check that all threaded parts are not stripped or crossheaded. If parts are damaged, get new ones.
2. Check that lashing hook (1), latch rods (2), latch guides (3), caution plate (4), and instruction plate (5) are not bent or dented. Straighten bent or dented parts. Refer to FM 43-2. If more repair is needed, get new parts.
3. Check that door latch (6) is not damaged. If door latch is damaged, get a new one.
4. Check that pump compartment door (7) is not bent, dented, torn or cracked. Straighten bends or dents. Refer to FM 43-2. Weld cracks. Refer to TM 9-237. If more repair is needed, get a new part.
5. Check that lock cylinder (8) is not damaged. If part is damaged, get a new one.

END OF TASK

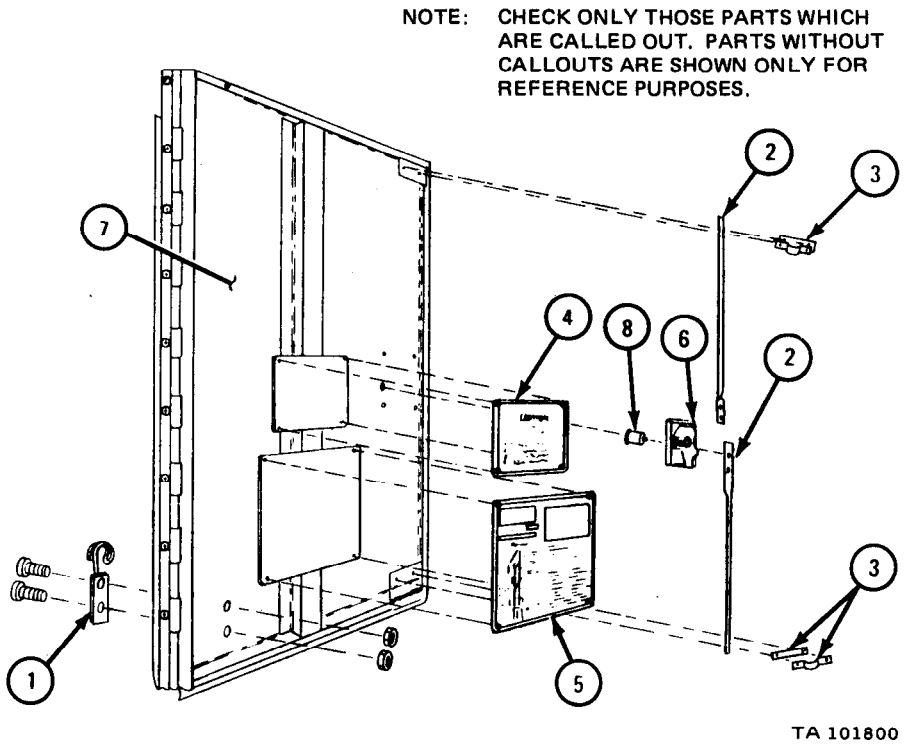

e. Assembly.

NOTE

If working on left pump compartment door, do frame 1. If working on right pump compartment door, go to frame 2.

FRAME 1

Soldier A 1. Aline screw holes in lashing hook (1) with screw holes in pump compartment door (2).

2. Put in two screws (3).

Soldier B 3. Put on two nuts (4).

END OF TASK

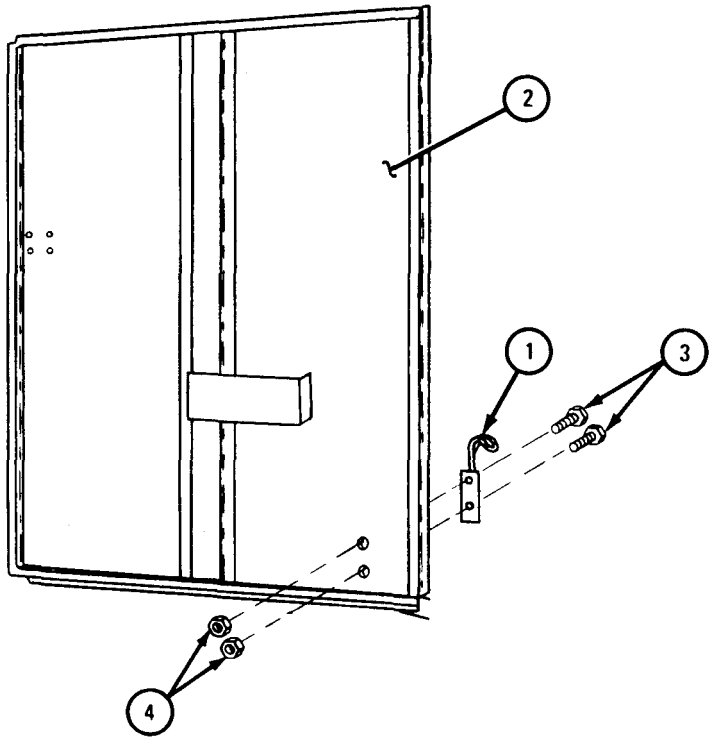

FRAME 2

1. Put door latch (1) on pump compartment door (2). Put in four rivets (3).
2. Put on latch rod (4). Aline hole of latch rod guide (5) with holes in pump compartment door (2) and rod (4). Put in two screws (6) and put on nuts (7).
3. Do step 2 again for latch rod (8).
4. Put in lock cylinder (9) and put on nut (10).

GO TO FRAME 3

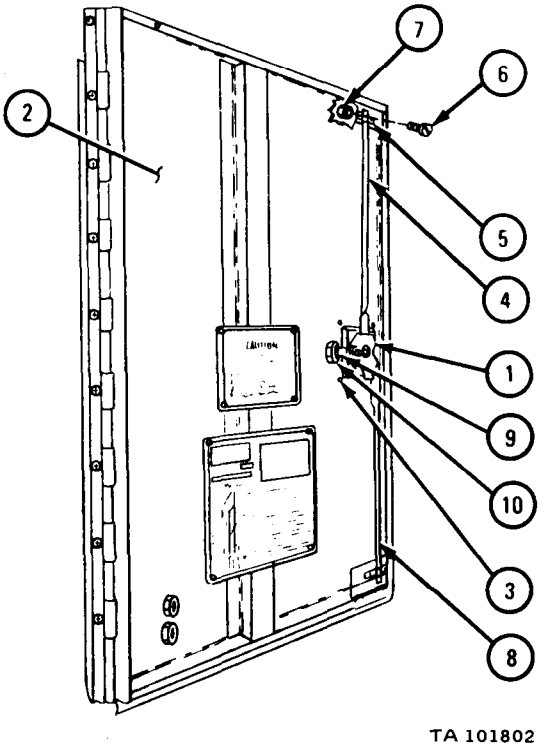

FRAME 3

Soldier A 1. Put lashing hook (1) on pump compartment door (2) and put in two screws (3).

Soldier B 2. Put on two nuts (4).

Soldier A 3. Put caution plate (5) on pump compartment door (2) and put in four screws (6).

4. Put instruction plate (7) on pump compartment door (2) and put in four screws (8).

END OF TASK

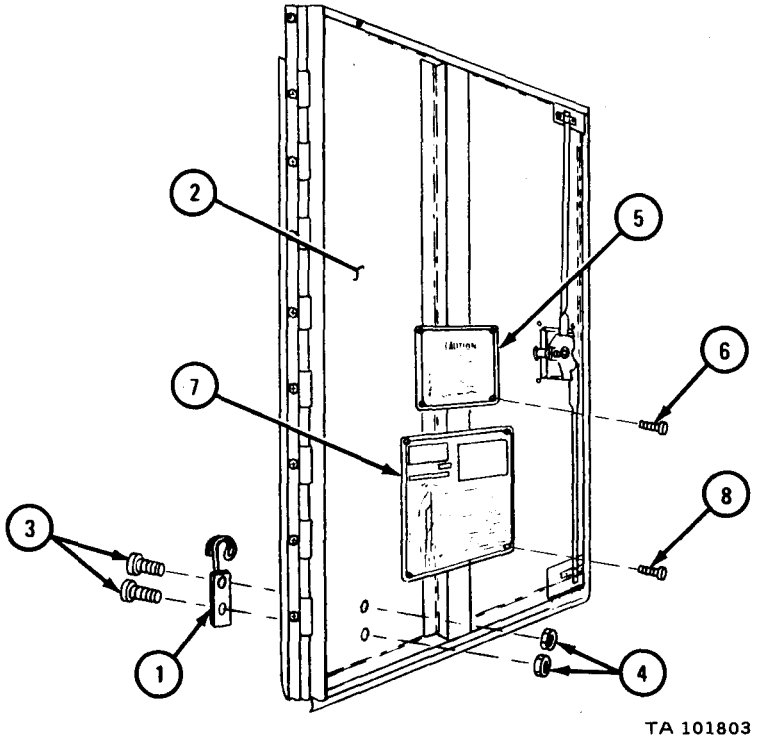

f. Replacement.

FRAME 1

NOTE

This task is the same for the left and right pump compartment doors. This task is shown for the left pump compartment door.

Soldiers A and B	1.	Raise pump compartment door (1) into place.
Soldier B	2.	Hold pump compartment door (1) in place.
Soldier A	3.	Put in 10 screws (2) and put on nuts (3).
	4.	Put in three screws (4) and put on nuts (5).
	5.	Close pump compartment doors (1).

END OF TASK

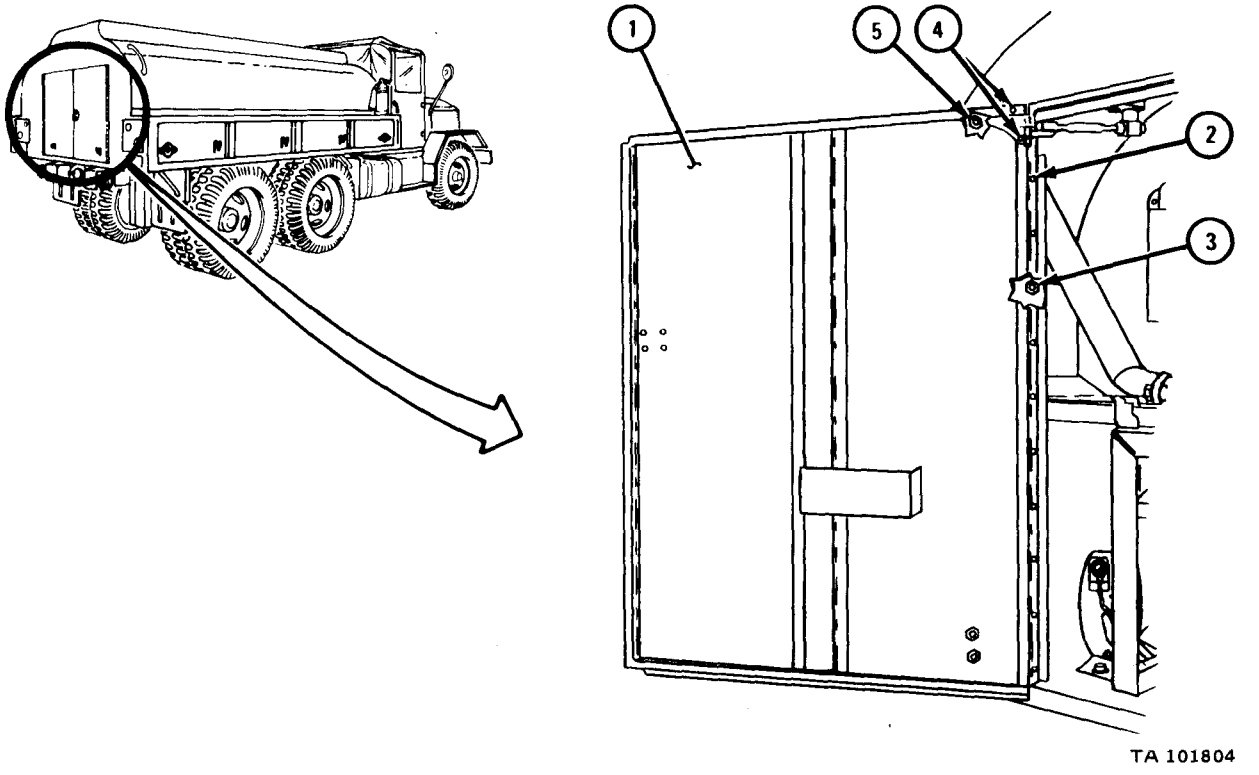

17-20. HOSE COMPARTMENT DOOR REMOVAL, REPAIR, AND REPLACEMENT (TRUCKS M49A1C AND M49A2C).

NOTE

This task is the same for the left and right hose compartment doors. This task is shown for the right hose compartment door.

TOOLS: No special tools required

SUPPLIES: None

PERSONNEL: One

EQUIPMENT CONDITION: Truck parked, engine off, handbrake set.

a. Removal.

FRAME 1

1. Take out hinge pin (1).
2. Take off hose compartment door (2).

END OF TASK

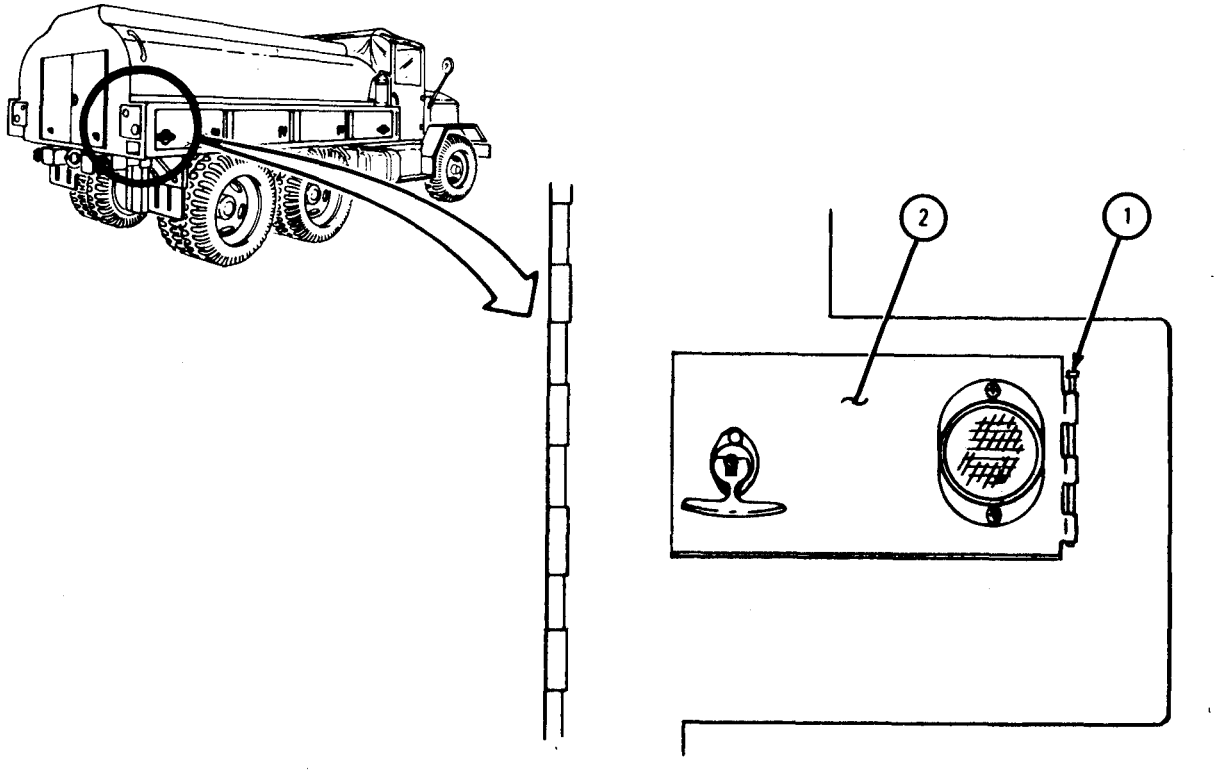

b. Disassembly.

FRAME 1

1. Take off two nuts (1). Take out two screws (2), and take off reflector (3).
2. Take off four nuts (4). Take out four screws (5), pin (6), handle (7), retainer (8), and spring (9).
3. Take off latch assembly (10).

END OF ASK

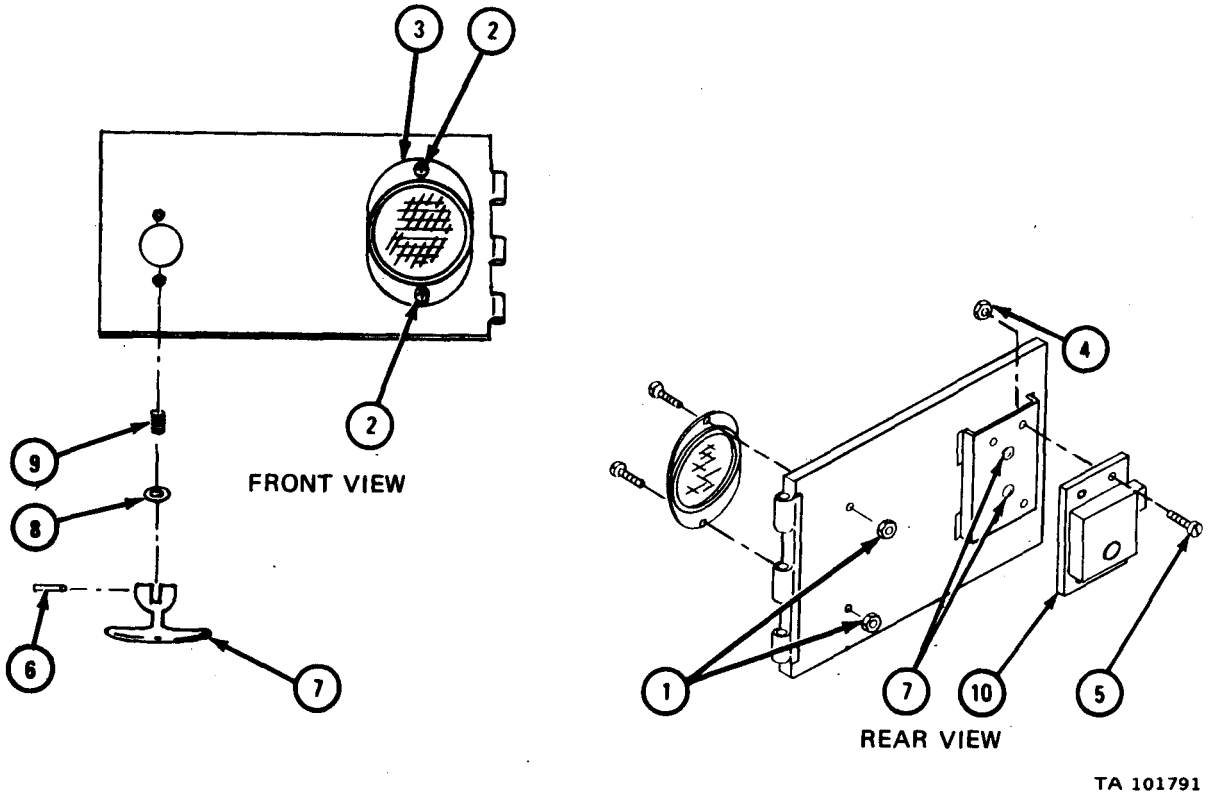

c. Cleaning. There are no special cleaning procedures needed. Refer to cleaning procedures given in Part 1, para 1-3.

d. Inspection and Repair.

FRAME 1

1. Check that all threaded parts are not stripped or crossthreaded. If parts are stripped or crossthreaded, get new ones.
2. Check that reflector (1) is not broken or damaged. If reflector is damaged, get a new one.
3. Check that hose compartment door (2) is not bent, dented, torn or cracked. Straighten bent or dented door. Refer to FM 43-2. Weld torn or cracked door, Refer to TM 9-237. If more repair is needed, get a new part.
4. Check that latch assembly (3), handle (4), retainer (5), pin (6), and spring (7) are not damaged. If parts are damaged, get new ones.

END OF TASK

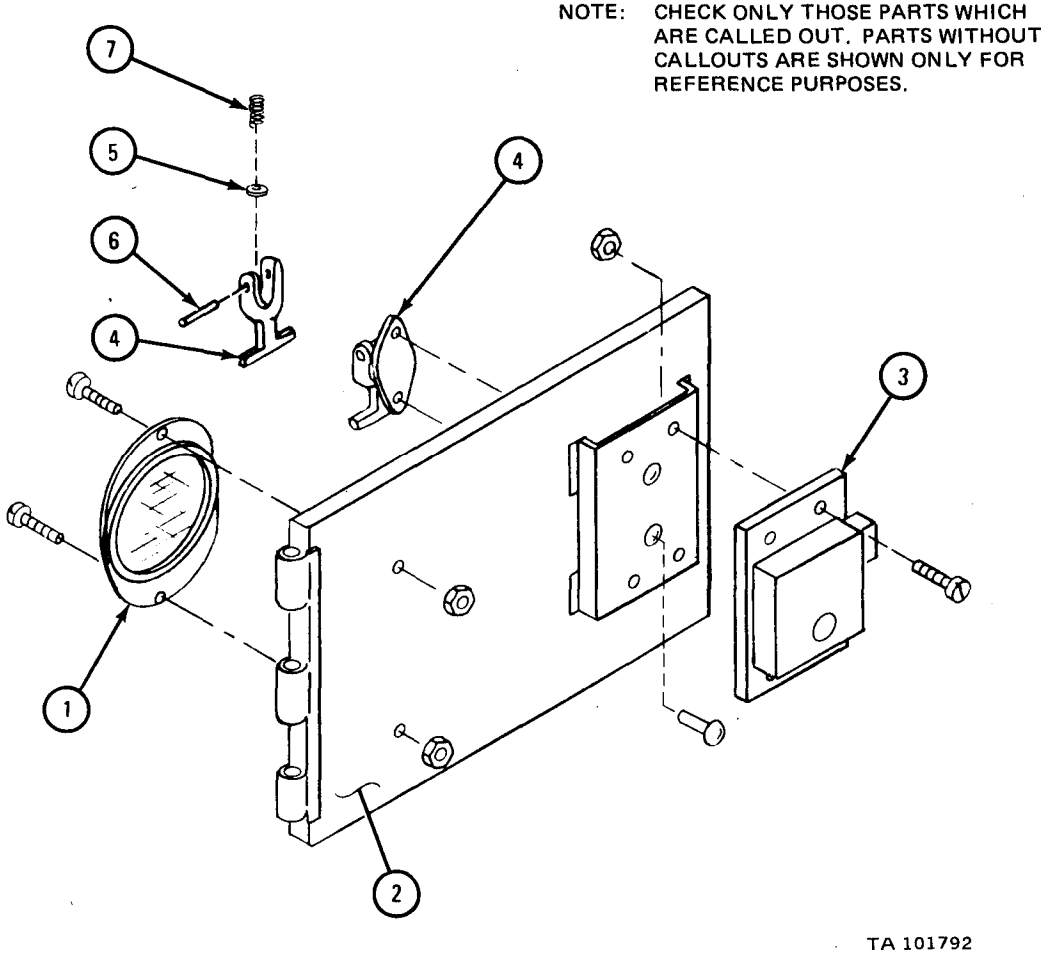

e. Assembly.

FRAME 1

1. Put reflector (1) in place. Put in two screws (2) and put on two nuts (3).
2. Put on latch assembly (4). Put in four screws (5), and put on four nuts (6).
3. Put on spring (7), retainer (8), and handle (9). Put in pin (10).

END OF TASK

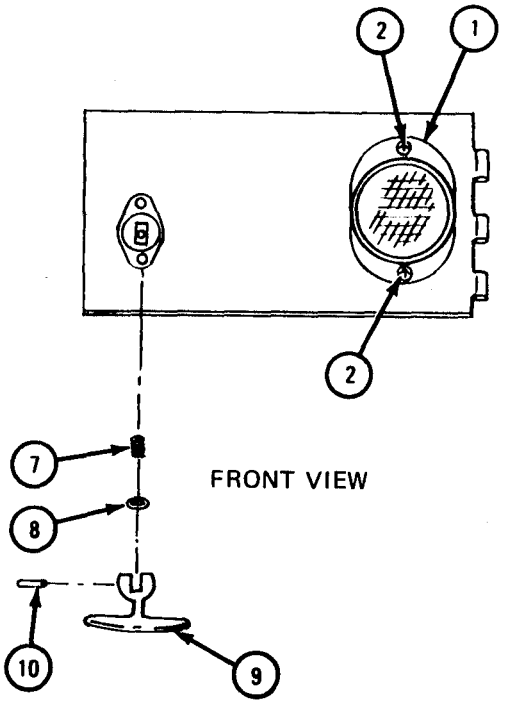

FRONT VIEW

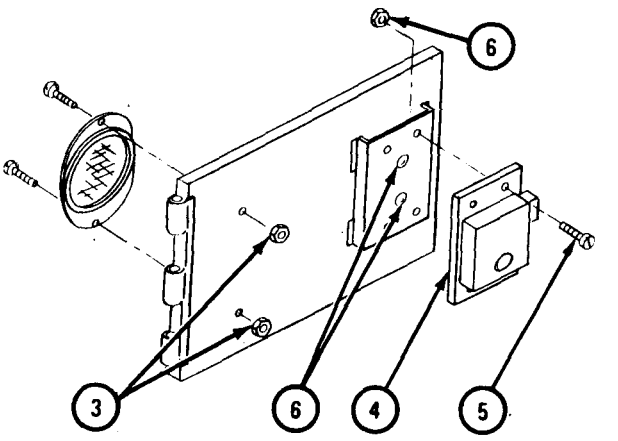

REAR VIEW

TA 101793

f. Replacement.

FRAME 1

1. Aline hinges (1).
2. Put in hinge pin (2).

END OF TASK

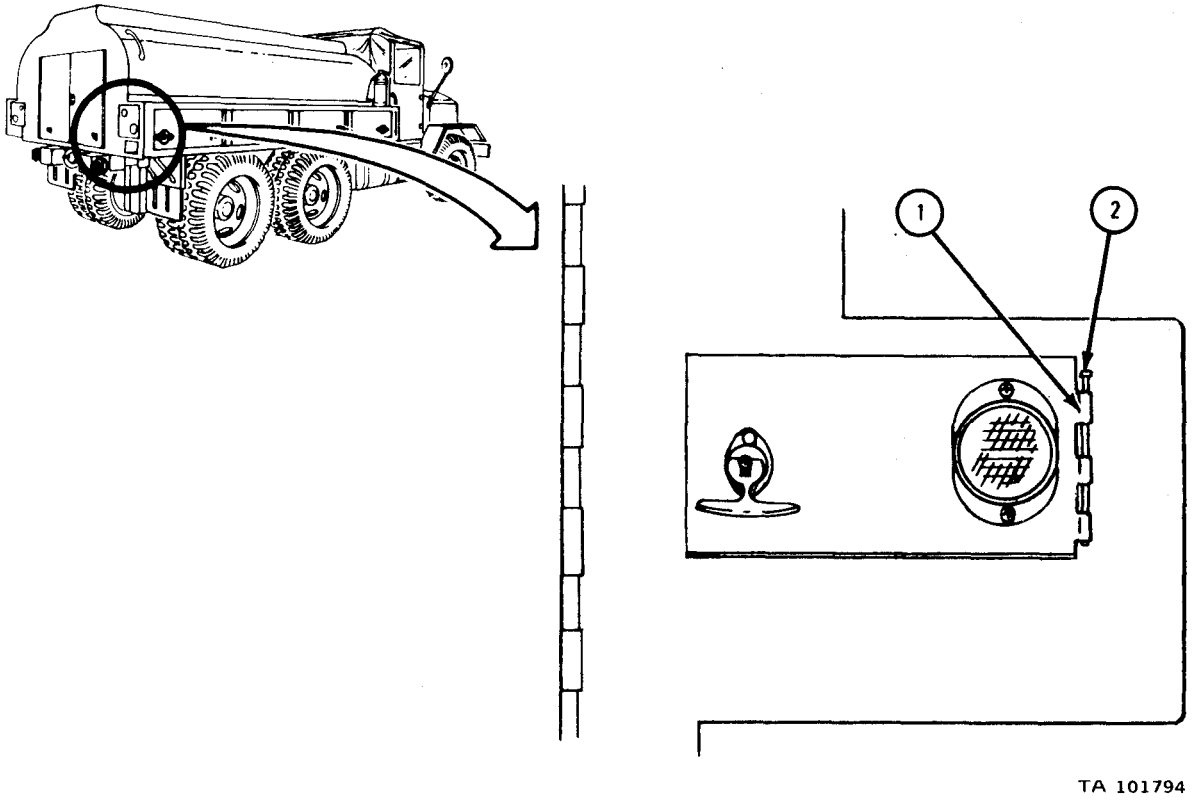

17-21. TANK BODY DOOR HOLDER REMOVAL, REPAIR, REPLACEMENT, AND ADJUSTMENT.

TOOLS: No special tools required

SUPPLIES: Solvent, dry cleaning, type II (SD-2), Fed. Spec P-D-680
Cotter pin (3)
Rags

PERSONNEL: One

EQUIPMENT CONDITION: Truck parked, engine off, handbrake set.

a. Removal.

FRAME 1

NOTE

This task is the same for the left and right door holders.
This task is shown for the right door holder.

1. Open pump compartment door (1).
2. Take out three screws and washers (2) and take off nuts (3) holding door holder (4) to pump compartment door (1). Block open door.
3. Take out two screws and washers (5) and take off nuts (6) holding door holder (4) to truck frame (7). Take off door holder.

END OF TASK

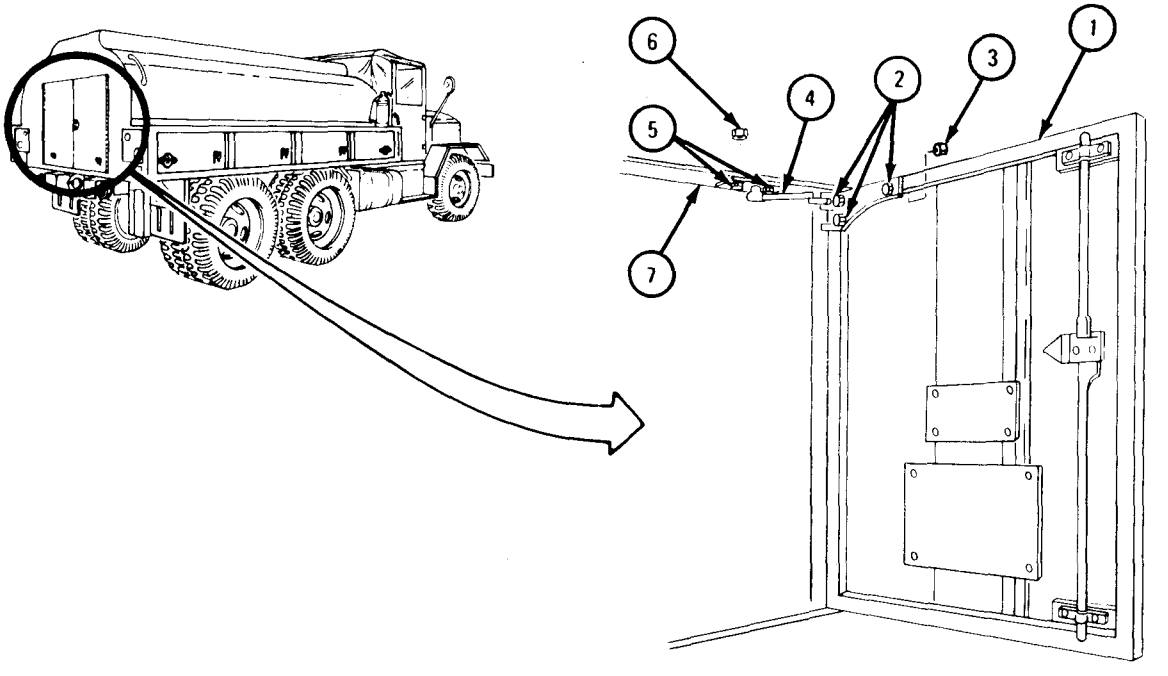

TA 101147

b. Disassembly.

FRAME 1

NOTE

This task is the same for the left and right door holder assemblies.

1. Take out cotter pin (1) and spring (2) with ball (3). Throw away cotter pin.
2. Take out cotter pin (4) and pin (5). Throw away cotter pin.
3. Take mounting bracket (6) off supporting bracket (7).

GO TO FRAME 2

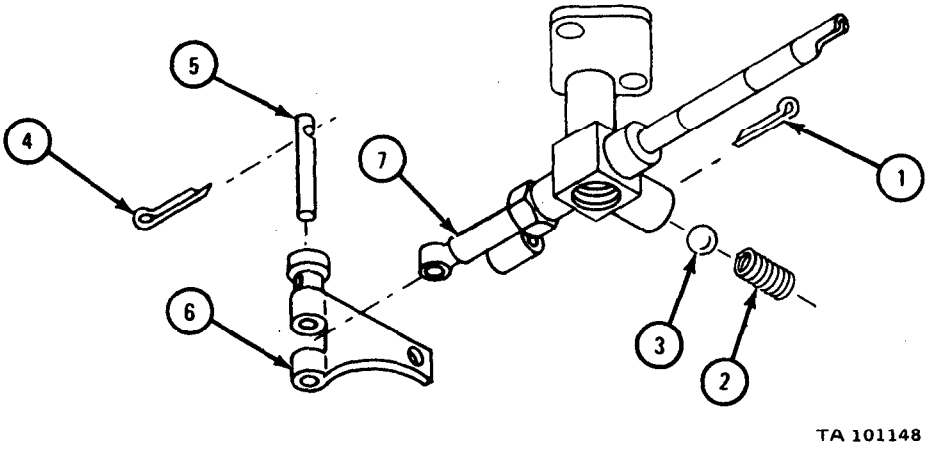

FRAME 2

1. Take out cotter pin (1). Throw away cotter pin.
2. Take off nut (2) and bracket (3).
3. Loosen nut (4).
4. Take supporting bracket (5) off stop arm (6).
5. Take nut (4) off stop arm (6) and take stop arm out of housing (7).

END OF TASK

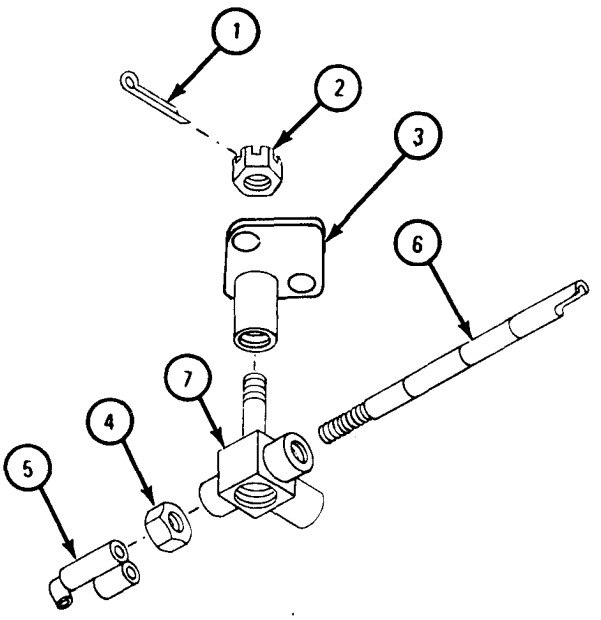

TA 101149

c. Cleaning. There are no special cleaning procedures needed. Refer to cleaning procedures given in Part 1, para 1-3.

NOTE

Clean all parts before inspection and before assembly.

d. Inspection and Repair.

FRAME 1

1. Check that pin (1) is not bent, cracked or worn.
2. Check that mounting bracket (2), supporting bracket (3), three nuts (4), bracket (5), housing (6) or stop arm (7) have no bends, dents, cracks or damaged threading.
3. Check that ball (8) is not worn or cracked.
4. Check that spring (9) is not broken or distorted.
5. If any part is damaged, get a new part.

END OF TASK

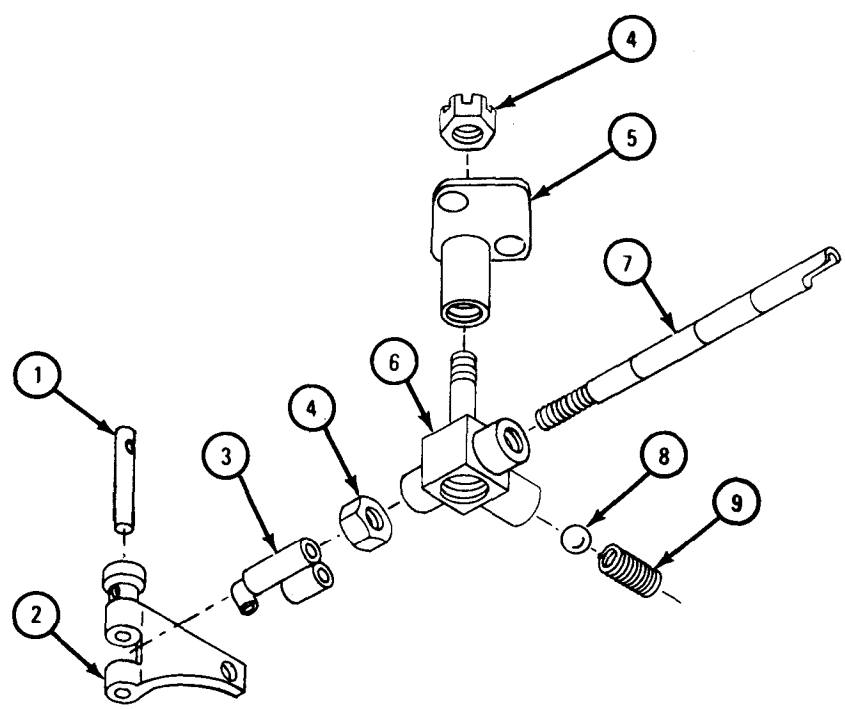

TA 101150

e. Assembly.

FRAME 1

NOTE

This task is the same for the left and right door holder assemblies.

1. Put threaded end of housing (1) through bracket (2).
2. Put on nut (3) and put cotter pin (4) through nut and housing (1).
3. Put stop arm (5) through housing (1) and put on nut (6).
4. Put supporting bracket (7) onto stop arm (5).

GO TO FRAME 2

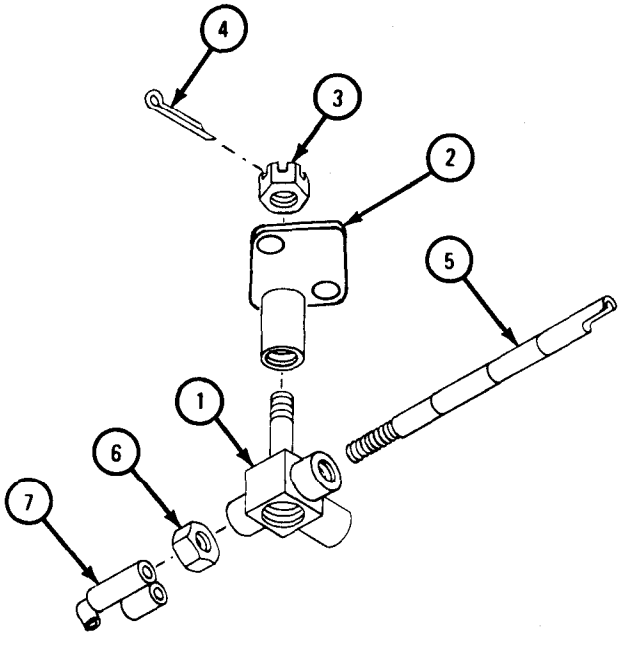

TA 101151

FRAME 2

NOTE

Make sure that spring (1) is below hole for cotter pin (2) in housing (3).

1. Put ball (4) and spring (1) into housing (3) and put in cotter pin (2).
2. Put supporting bracket (5) into mounting bracket (6) and aline holes.
3. Put pin (7) through holes in supporting bracket (5) and mounting bracket (6) and put cotter pin (8) through mounting bracket.

END OF TASK

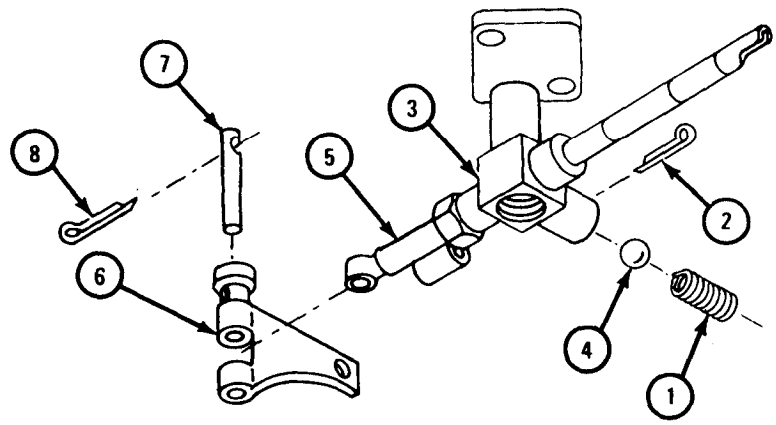

TA 101152

f. Replacement.

FRAME 1

NOTE

This task is the same for the left and right door holder assemblies.

1. Aline holes in door holder assembly (1) with holes in truck frame (2) and put in two screws and washers (3) and nuts (4).
2. Aline holes in door holder assembly (1) with holes in pump compartment door (5) and put in three screws and washers (6) and nuts (7).
3. Take out block from pump compartment door (5).

END OF TASK

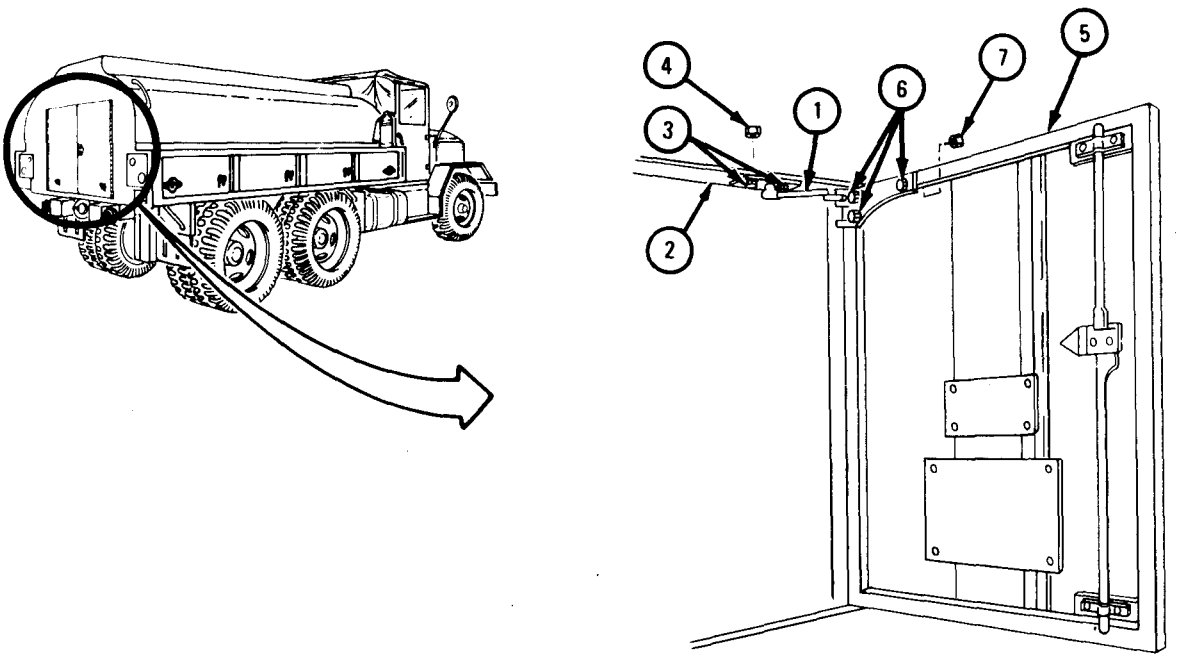

g. Adjustment.

FRAME 1

NOTE

This task is the same for the left and right door holder assemblies.

1. Check that guide housing ball (1) is seated in the groove on stop arm (2) nearest threaded end of stop arm.
2. If guide housing ball (1) is not in correct groove on stop arm (2), loosen nut (3) and turn stop arm (2) until guide housing ball is in correct groove. Tighten nut.
3. Close pump compartment door.

END OF TASK

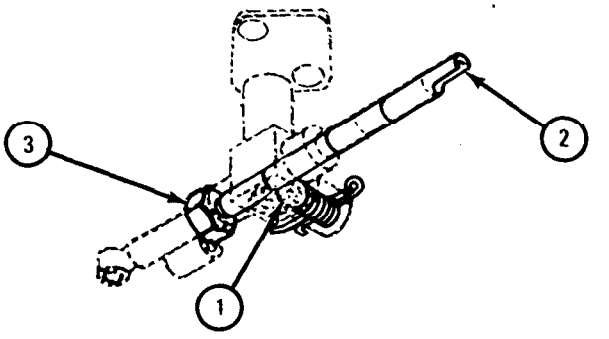

TA 101154

17-22. WATER SEGREGATOR REMOVAL AND REPLACEMENT (TRUCK M49A2C).

WARNING

Smoking, sparks, or open flame are not allowed within 50 feet of work area during this task. Fuel can explode, causing injury to personnel and damage to equipment.

TOOLS: No special tools required

SUPPLIES: None

PERSONNEL: Two

EQUIPMENT CONDITION: Truck parked, engine off, handbrake set.

Preliminary Procedure. Remove water segregator access cover. Refer to TM 9-2320-209-20.

b. Removal.

FRAME 1

1. Open truck rear compartment doors.
2. Put container under drain lines (1 and 2).
3. Open drain valves (3 and 4). When fuel stops draining from drain lines (1 and 2), put fuel in approved disposal area.

GO TO FRAME 2

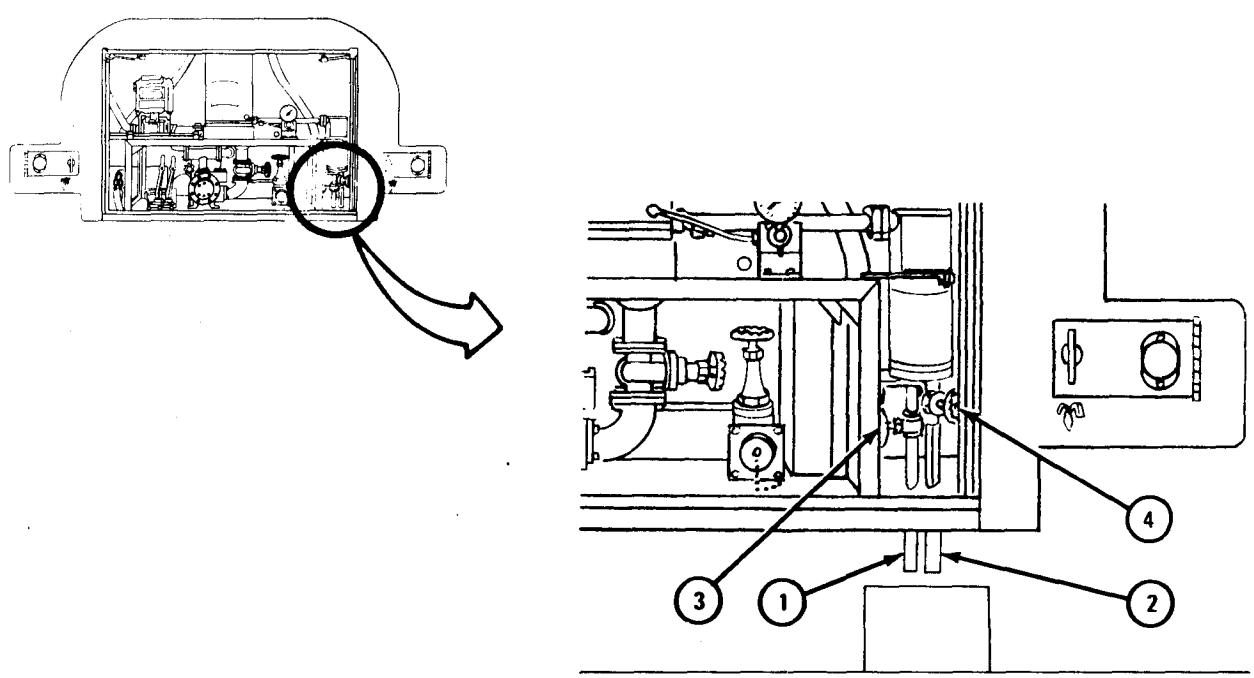

FRAME 2

1. Take off two coupling nuts (1). Take off line (2).
2. Take off two coupling nuts (3). Take off line (4).

GO TO FRAME 3

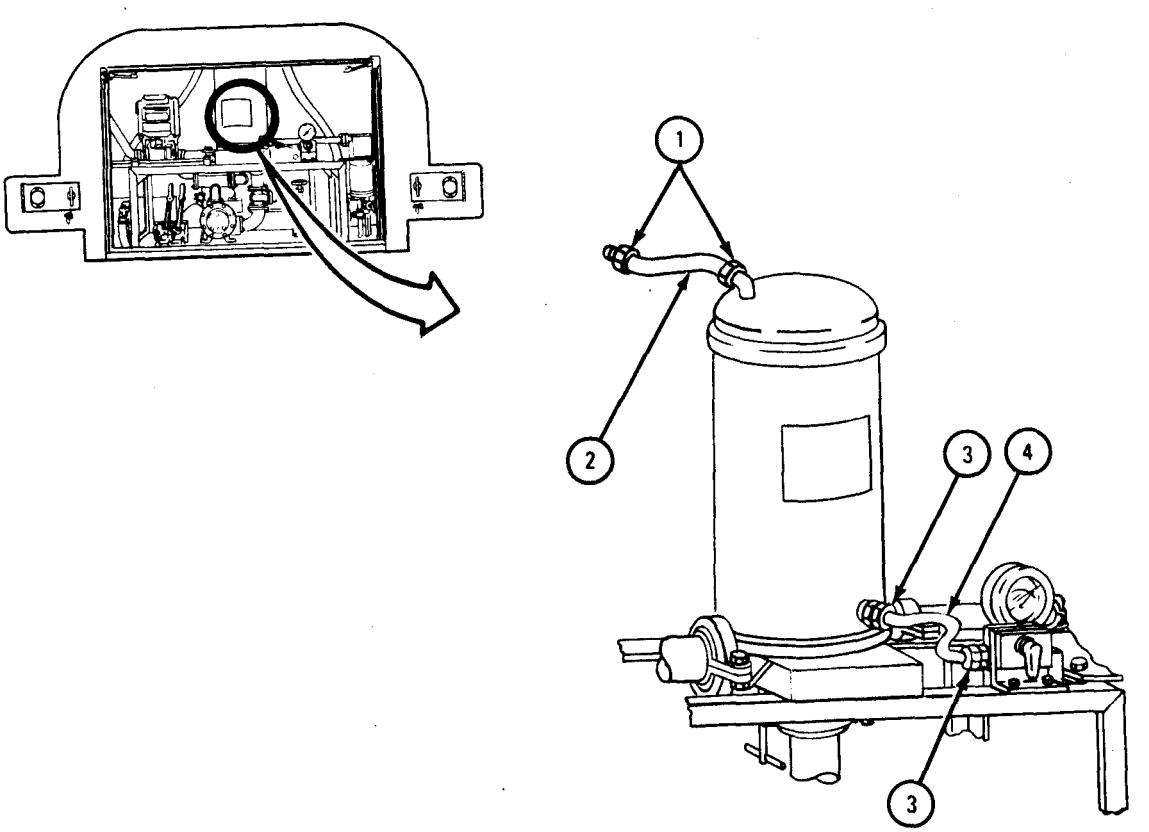

TA 046632

FRAME 3

1. Take off nut (1) and bolt (2) on both sides of coupling (3), Take off coupling. Push gasket (4) away from segregator (5).
2. Do step 1 again for coupling (6).
3. Take off nut (7) and bolt (8) on both sides of coupling (9). Take off coupling. Slide gasket (10) away from segregator (5).

GO TO FRAME 4

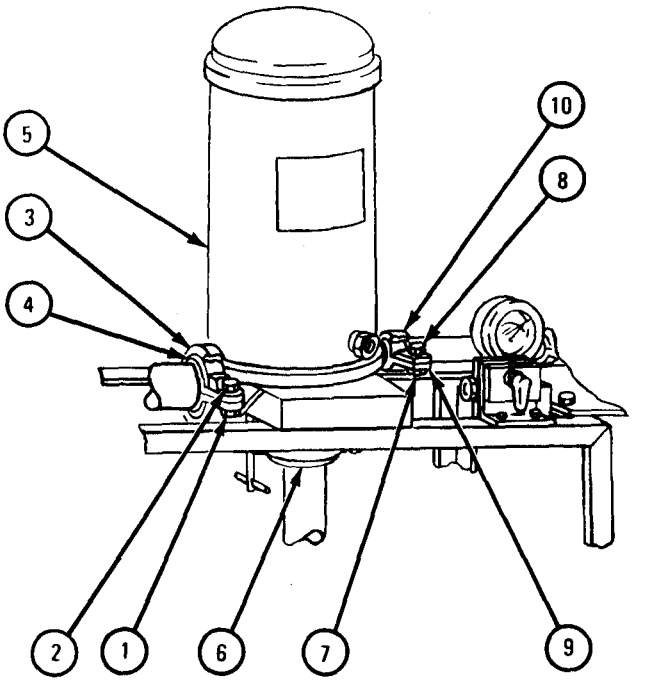

FRAME 4

1. Take off coupling nuts (1). Pull two lines (2) out of fittings (3).

GO TO FRAME 5

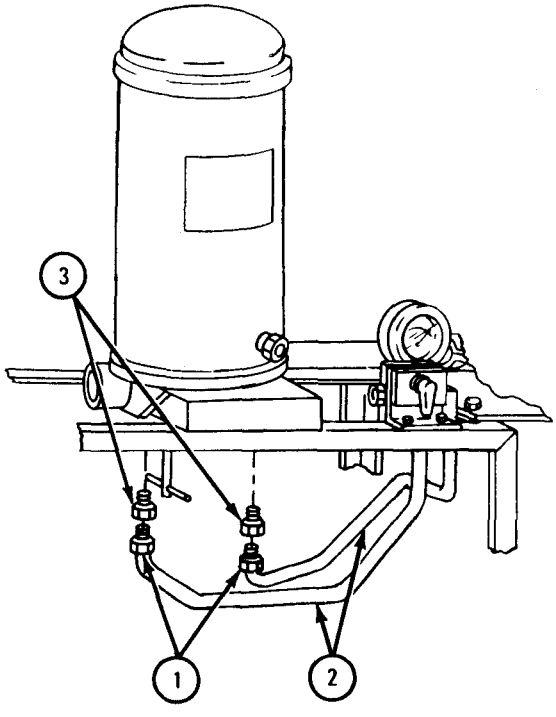

TA 046634

FRAME 5

1. Take off four nuts (1) and bolts (2).

Soldiers A and B

2. Lift up segregator (3) until handle (4) comes out of frame. Take out segregator (3).

END OF TASK

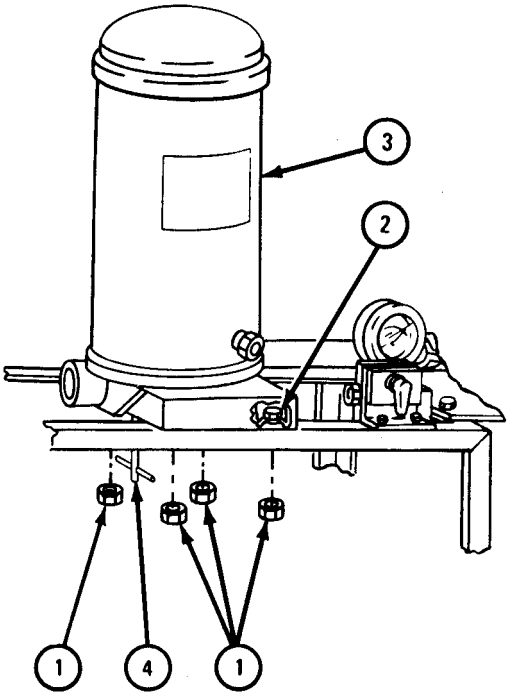

TA 046635

c. Replacement.

FRAME 1

Soldiers A and B 1. Put segregator (1) in place, alining holes. Put four bolts (2) in place and put on four nuts (3).

GO TO FRAME 2

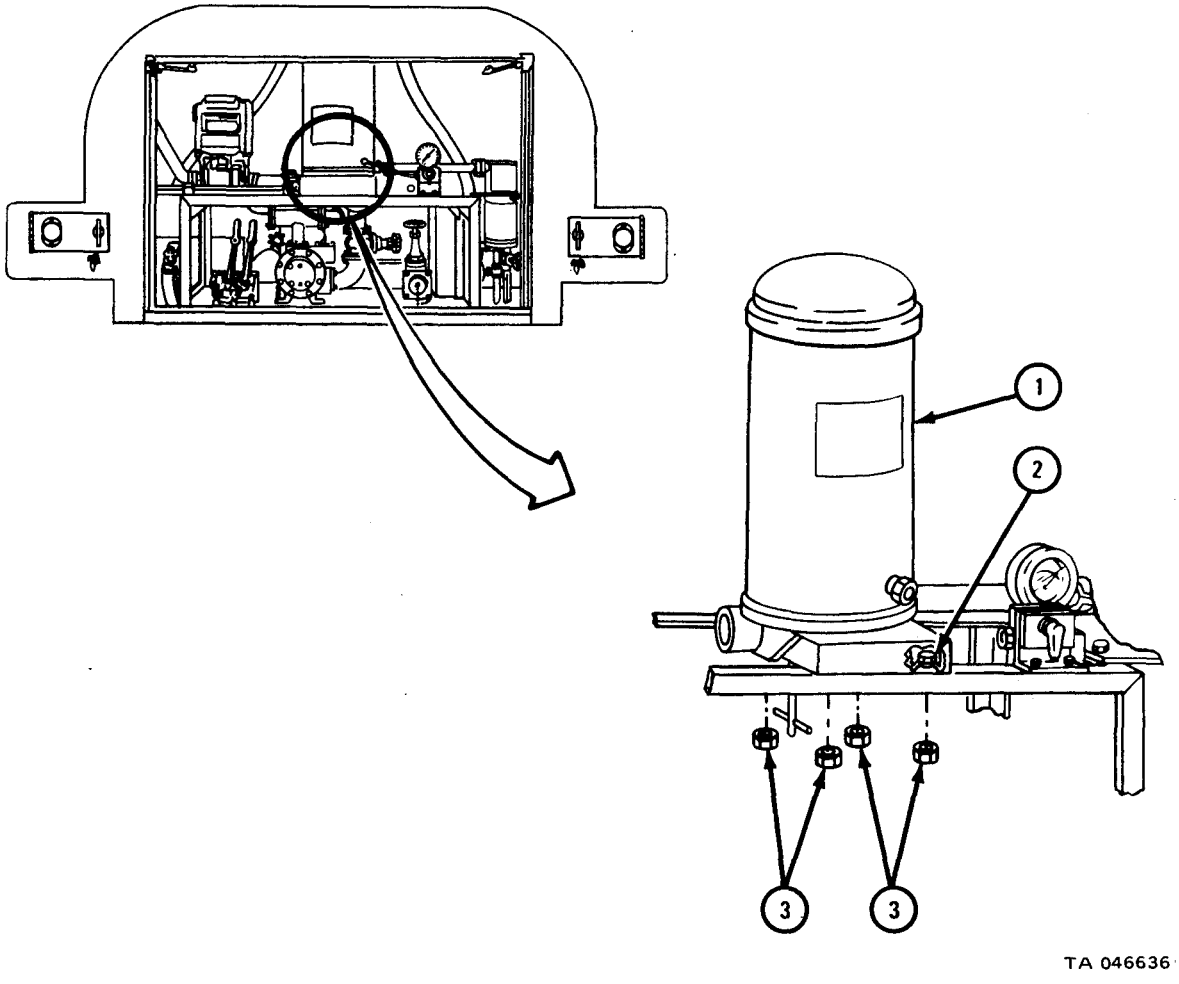

FRAME 2

1. Put two lines (1) into fittings (2) and put on two coupling nuts (3).

GO TO FRAME 3

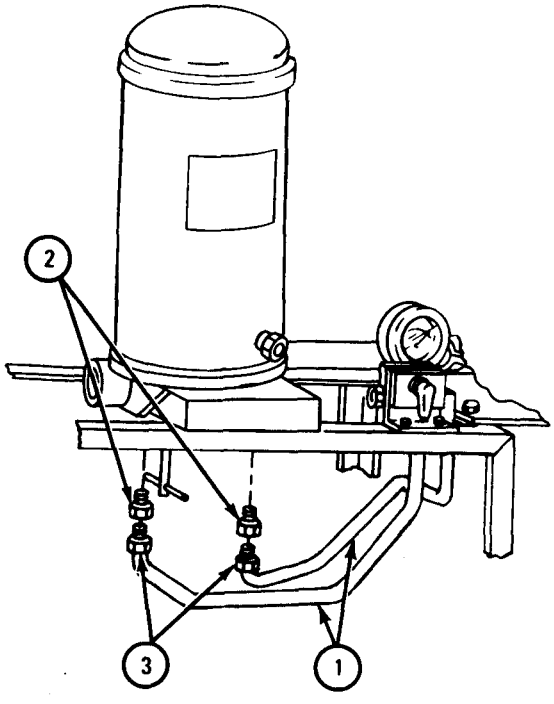

TA 046637

FRAME 3

1. Slide gasket (1) into place. Put both halves of coupling (2) over gasket.
2. Put two bolts (3) through holes in coupling (2). Put on two nuts (4).
3. Do steps 1 and 2 again for coupling (5).
4. Put gasket (6) into place. Put both halves of coupling (7) over gasket.
5. Put two bolts (8) through holes in coupling (7). Put on two nuts (9).

GO TO FRAME 4

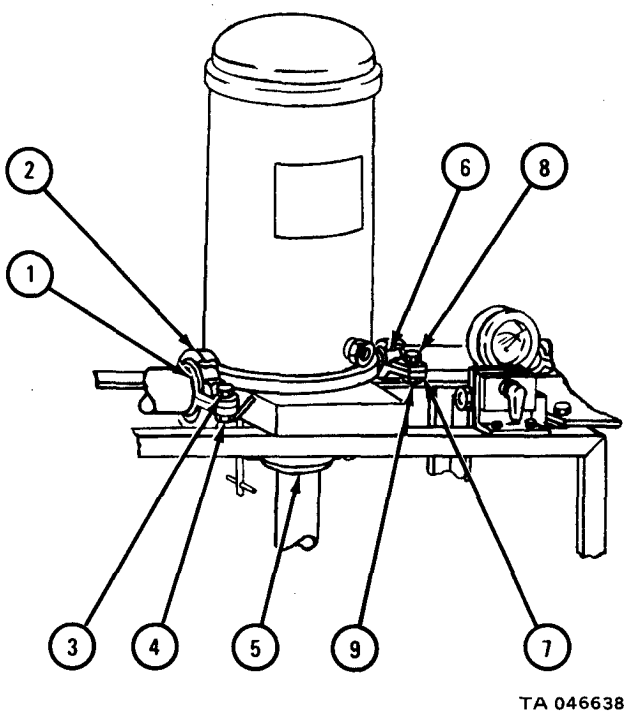

FRAME 4

1. Put line (1) in place and put on two coupling nuts (2).
2. Put line (3) in place and put on two coupling nuts (4).
3. Close truck rear compartment doors.

NOTE

Follow-on Maintenance Action Required:

Replace water segregator access cover. Refer to TM 9-2320-209-20.

END OF TASK

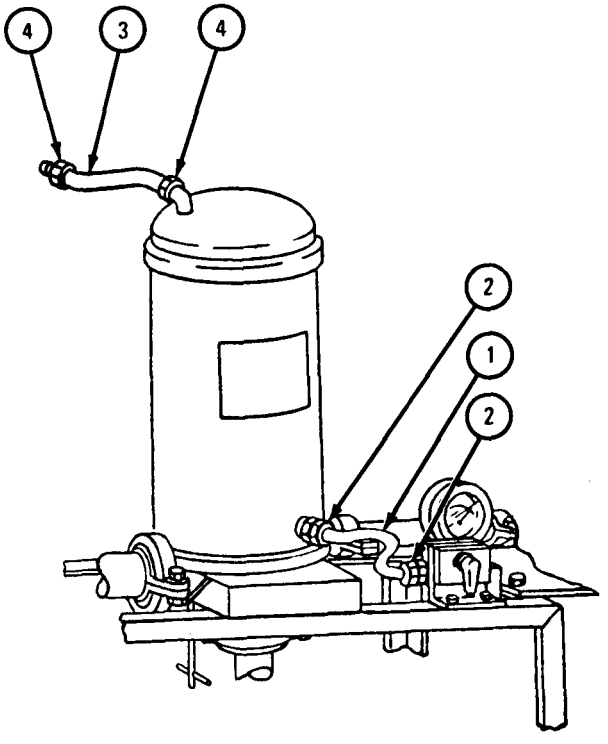

TA 046639

17-23. WATER SEGREGATOR FILTER REMOVAL, REPAIR, AND REPLACEMENT (TRUCK M49A2C).

WARNING

Smoking, sparks, or open flame are not allowed within 50 feet of work area during this task. Fuel can explode causing injury to personnel and damage to equipment.

TOOLS: No special tools required

SUPPLIES: Fuel container

PERSONNEL: Two

EQUIPMENT CONDITION: Truck parked, engine off, handbrake set.

Preliminary Procedure. Remove water segregator access cover. Refer to TM 9-2320-209-20.

b. Removal.

FRAME 1

1. Open rear compartment doors.
2. Put container under drain lines (1 and 2).
3. Open drain valves (3 and 4). When fuel stops draining, close valves and put fuel in approved disposal area.

GO TO FRAME 2

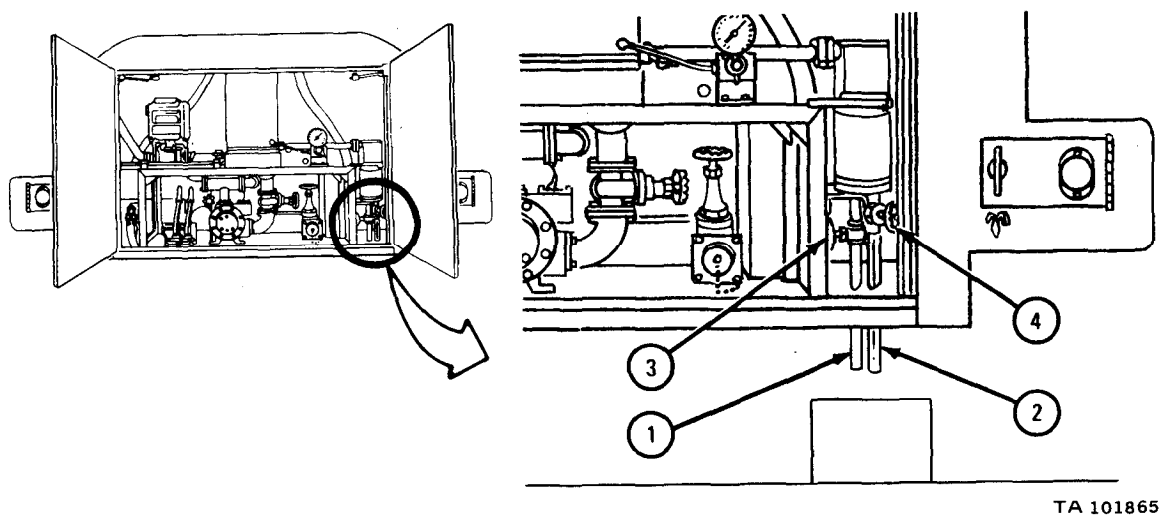

FRAME 2

1. Loosen two coupling nuts (1) and take off line (2).
2. Take off nut (3) and take out screw (4) on both sides of coupling (5). Take off coupling.
3. Do step 2 again for coupling (6).
4. Slide rubber seal (7) over pipe (8).

GO TO FRAME 3

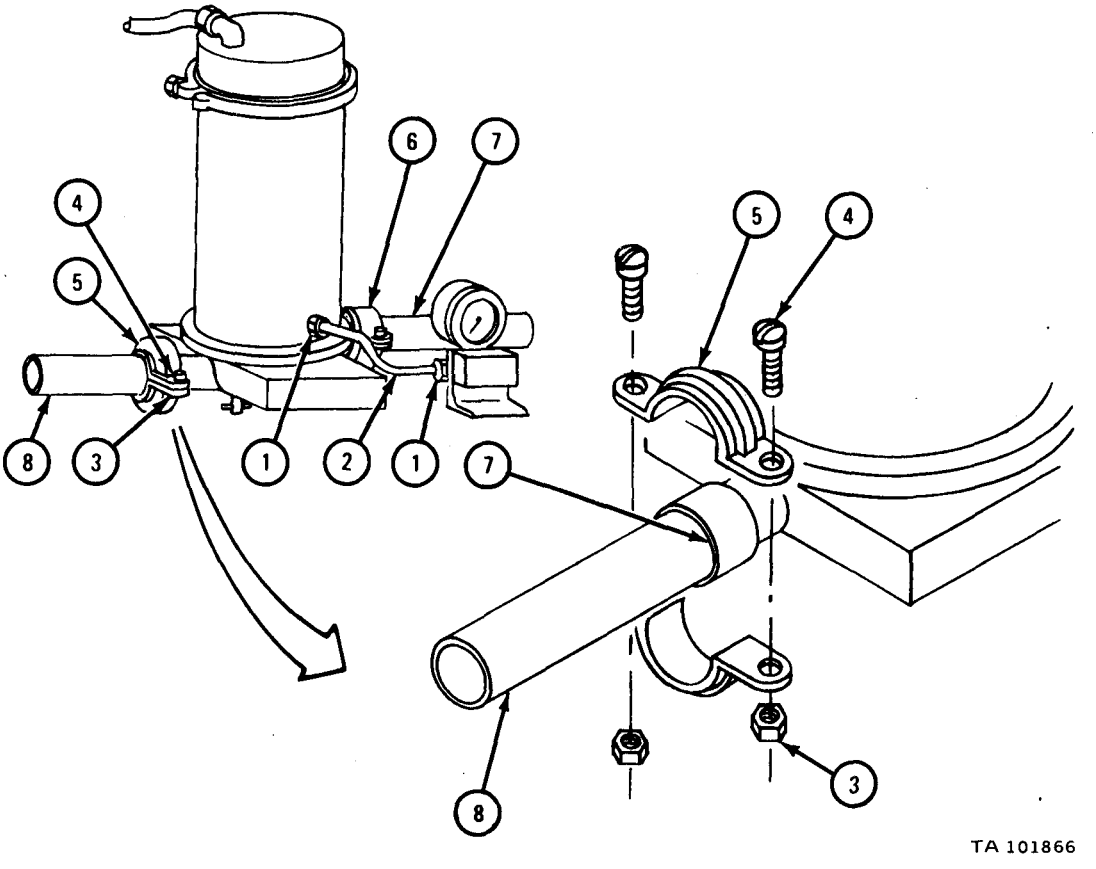

FRAME 3

1. Loosen two coupling nuts (1).
2. Pull two lines (2) out of fittings (3).

GO TO FRAME 4

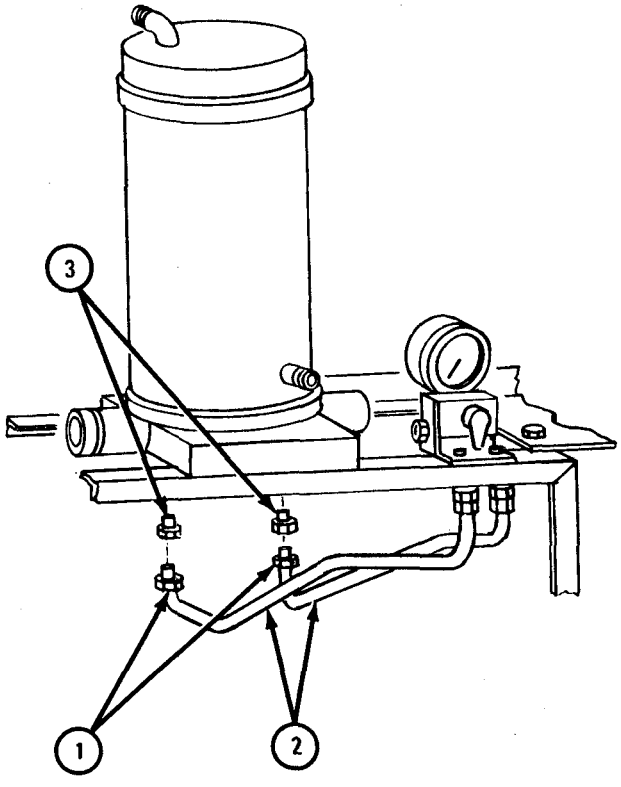

TA 101867

FRAME 4

1. Loosen two coupling nuts (1) and take off line (2)
2. Take off nut (3) and takeout screw (4) on both sides of coupling (5). Take off coupling.
3. Slide rubber seal (6) over pipe (7).

GO TO FRAME 5

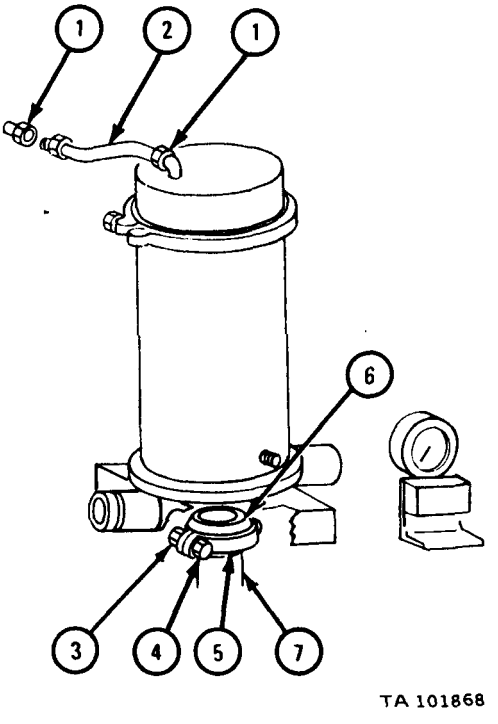

FRAME 5

1. Take off four nuts (1).
2. Take out four screws (2).

Soldiers A and B

3. Lift filter separator (3) out of truck.

END OF TASK

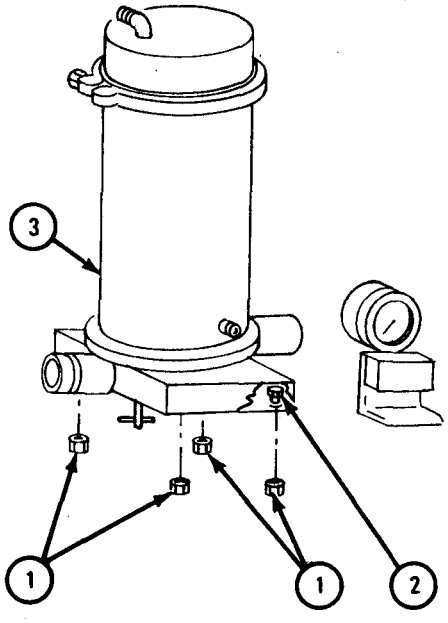

NOTE: PARTS WITHOUT CALLOUTS ARE SHOWN ONLY FOR REFERENCE PURPOSES.

TA 101869

c. Disassembly. Refer to TM 9-2320-209-20 for removal of filter elements.

d. Cleaning. There are no special cleaning procedures, except to handle canisters carefully to avoid damage to the teflon coating on the screen. Refer to cleaning procedures given in Part 1, para 1-3.

e. Inspection and Repair. Check all parts for damage or wear. If parts are damaged or worn, get a new part.

f. Assembly. Refer to. TM 9-2320-209-20 for replacement of filter elements.

g. Replacement.

FRAME 1

Soldiers A and B

1. Lift filter separator (1) into place.

2. Put in four screws (2) and put on four nuts (3).

GO TO FRAME 2

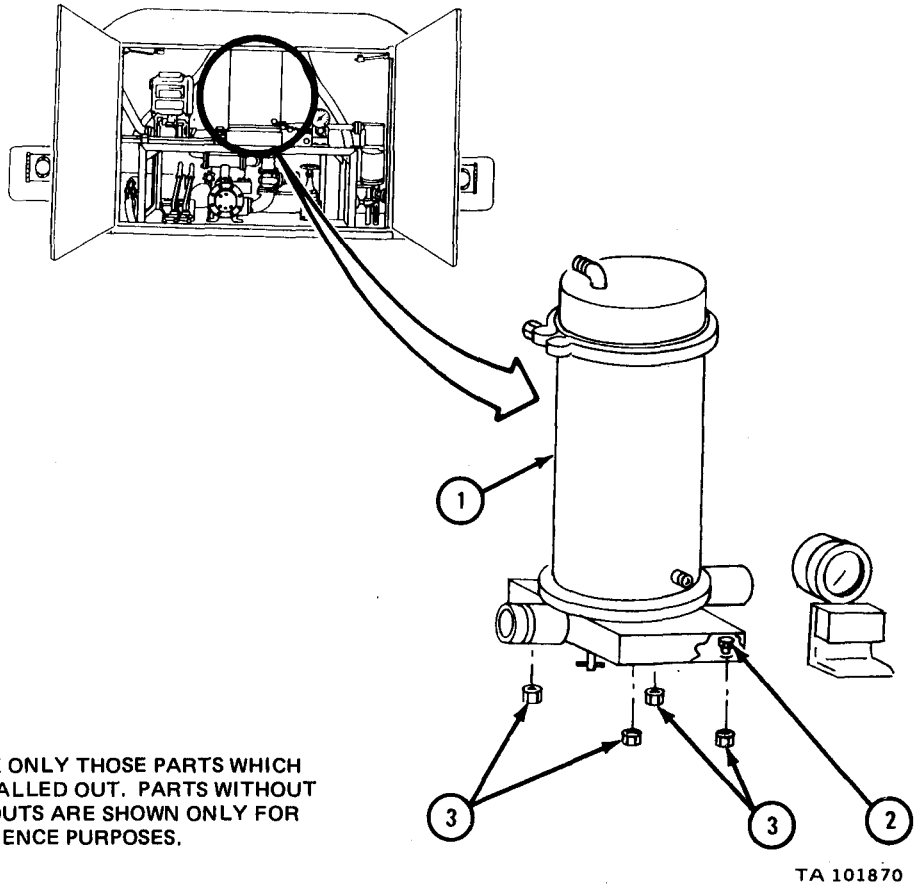

NOTE: CHECK ONLY THOSE PARTS WHICH ARE CALLED OUT. PARTS WITHOUT CALLOUTS ARE SHOWN ONLY FOR REFERENCE PURPOSES.

FRAME 2

1. Put line (1) in place and tighten two coupling nuts (2).
2. Slide rubber seal (3) over pipe connection (4).
3. Put coupling (5) in place and put in screw (6) and nut (7) on each side of coupling.

GO TO FRAME 3

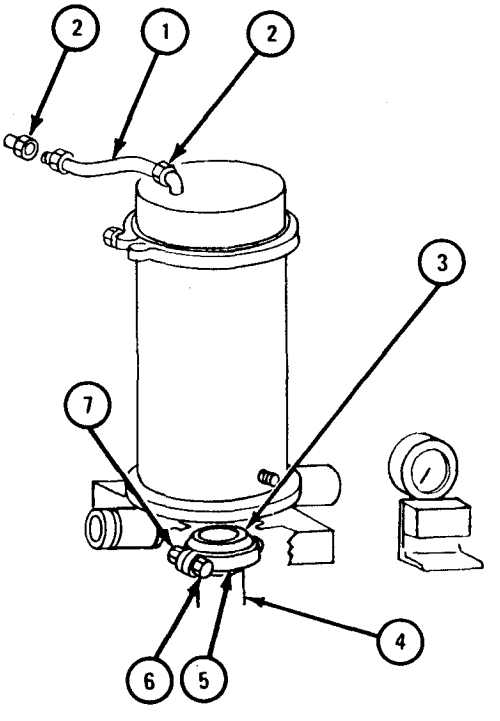

NOTE: CHECK ONLY THOSE PARTS WHICH ARE CALLED OUT. PARTS WITHOUT CALLOUTS ARE SHOWN ONLY FOR REFERENCE PURPOSES.

TA 101871

FRAME 3

1. Put lines (1) to fittings (2).
2. Put on two coupling nuts (3).

GO TO FRAME 4

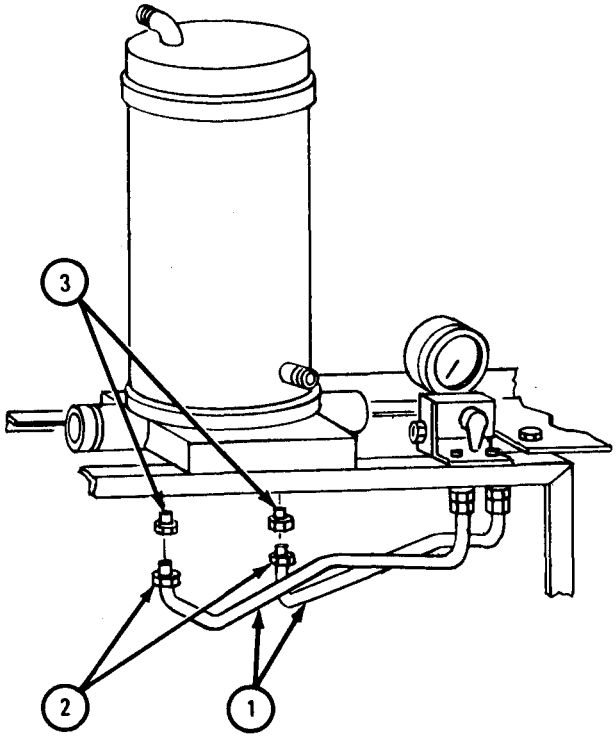

TA 101872

FRAME 4

1. Slide rubber seals (1) into place over pipe connection.
2. Put two halves of coupling (2) in place. Put in two screws (3) and put on two nuts (4).
3. Do steps 1 and 2 again for coupling (5), then tighten four nuts (4).
4. Put line (6) in place and tighten two coupling nuts (7).

NOTE

Follow-on Maintenance Action Required:

1. Replace filter segregator access cover. Refer to TM 9-2320-209-20.
2. Refill filter segregator with fuel. Refer to TM 9-2320-209-10.

END OF TASK

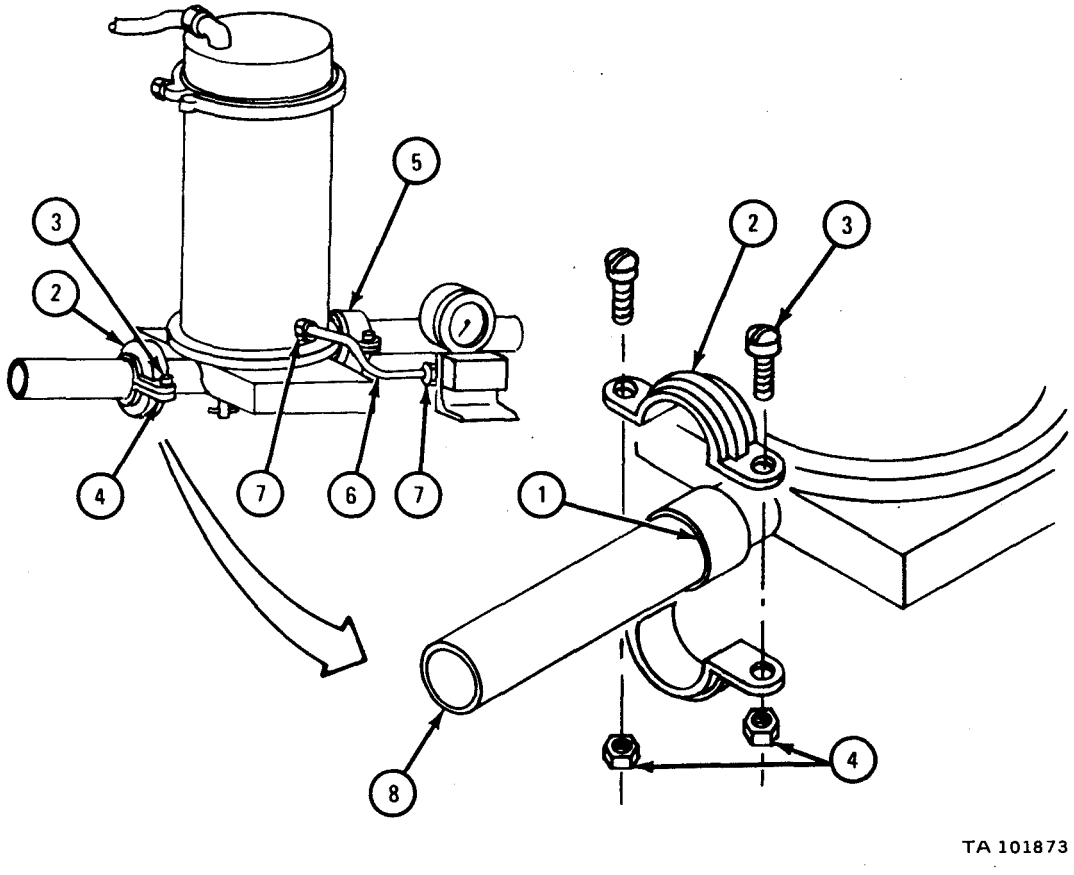

17-24. FUEL TANK DISCHARGE VALVE CONTROL REPAIR AND TEST.

TOOLS: No special tools required

SUPPLIES: Solvent, dry cleaning, type II (SD-2), Fed. Spec P-D-680

PERSONNEL: One

EQUIPMENT CONDITION: Truck parked, engine off, handbrake set.

a. Preliminary Procedures.

(1) Open rear compartment doors.

(2) Remove discharge valve operating lever. Refer to TM 9-2320-209-20.

b. Disassembly.

FRAME 1

1. Take off two lever springs (1) and fusible link release lever spring (2).

GO TO FRAME 2

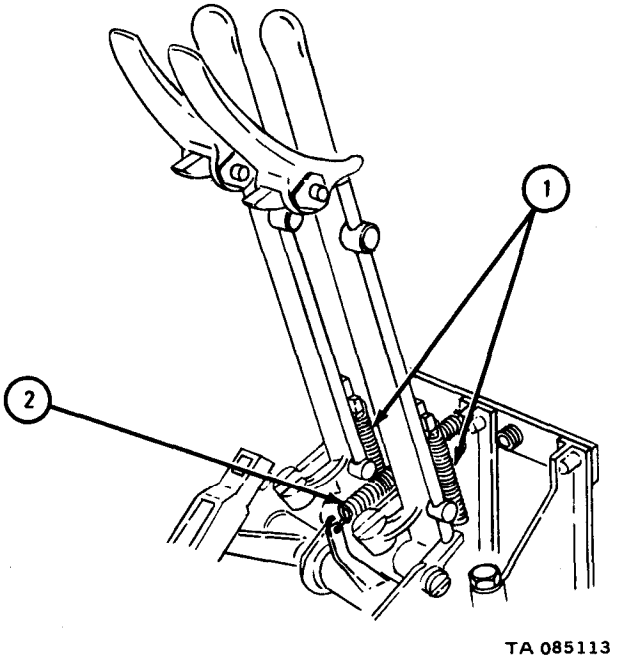

FRAME 2

1. Take out three screws (1). Take off bar (2).
2. Take out three screws (3). Take off bracket (4).

GO TO FRAME 3

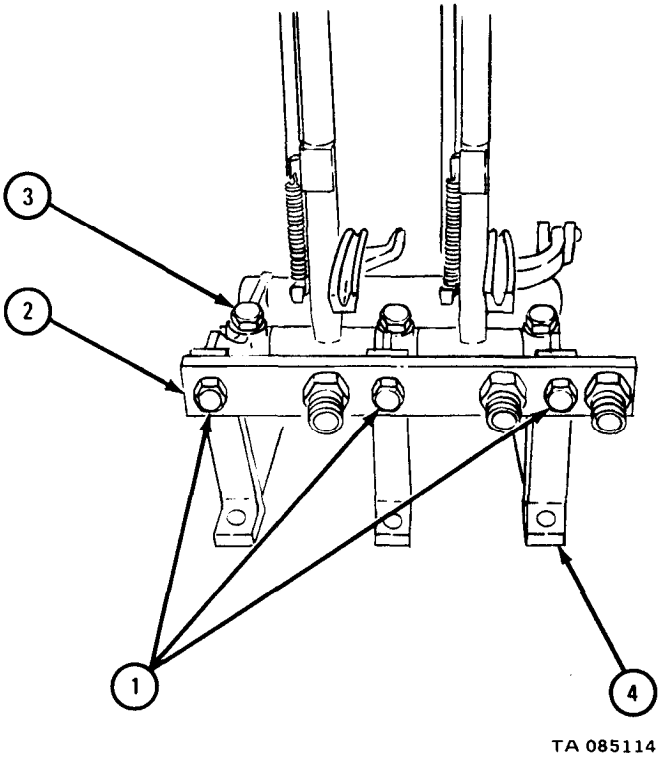

FRAME 3

1. Take off lever (1). Take out bearing sleeve (2). Loosen setscrew (3) and take off trip cam (4).
2. Take out cotter pin (5). Take off fusible link release lever (6).
3. Take out cotter pin (7). Take off fusible link (8).
4. Take off bracket (9).
5. Do step 1 for other lever.

GO TO FRAME 4

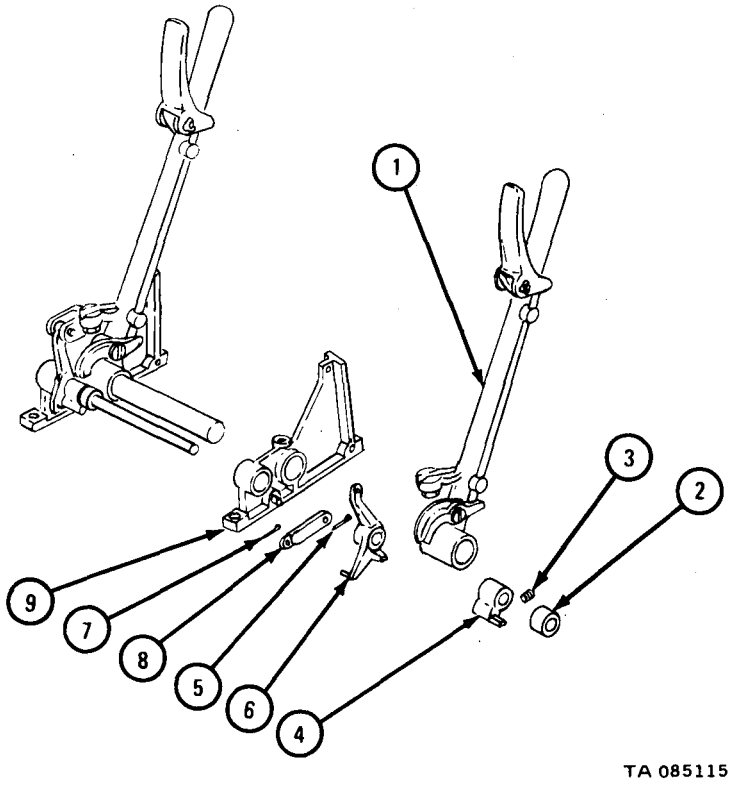

FRAME 4

1. Take off spring (1). Take off release lever (2) and retainer (3). Take out pin (4) and clevis (5).
2. Take out screw (6) and nut (7).
3. Take bracket (8) off lever shaft (9) and roller shaft (10).

GO TO FRAME 5

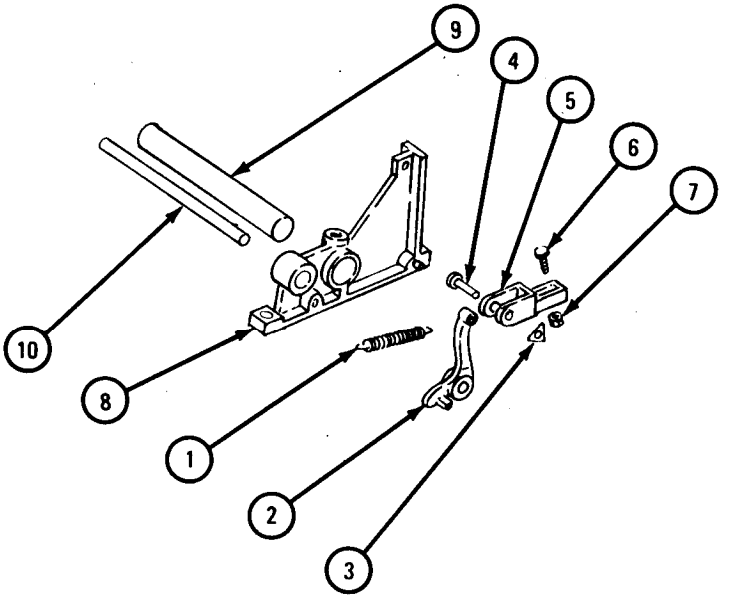

TA 085116

FRAME 5

1. Take out screw (1) and latch (2). Take out retainer (3), clevis pin (4), and trip rod operating handle (5).
2. Slide rod (6) from two guides (7). Take off guides. Take out nut (8) and screw(9).
3. Do steps 1 and 2 for other lever.

END OF TASK

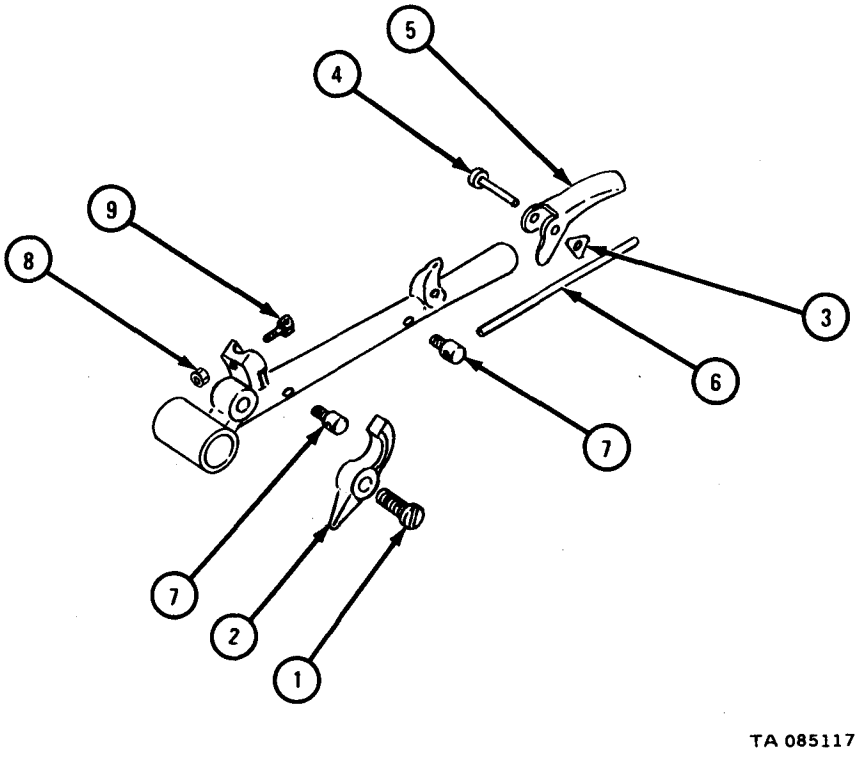

c. Cleaning. There are no special cleaning procedures needed. Refer to cleaning procedures given in Part 1, para 1-3.

d. Inspection and Repair.

FRAME 1

1. Check that three brackets (1), two cams (2), two levers (3), and shafts (4 and 5) have no cracks, breaks or other damage. If parts are damaged, get new ones.
2. Check that fusible link release lever (6), manual release lever (7), clevis (8), and fusible link (9) have no cracks, breaks or other damage. If parts are damaged, get new ones.

GO TO FRAME 2

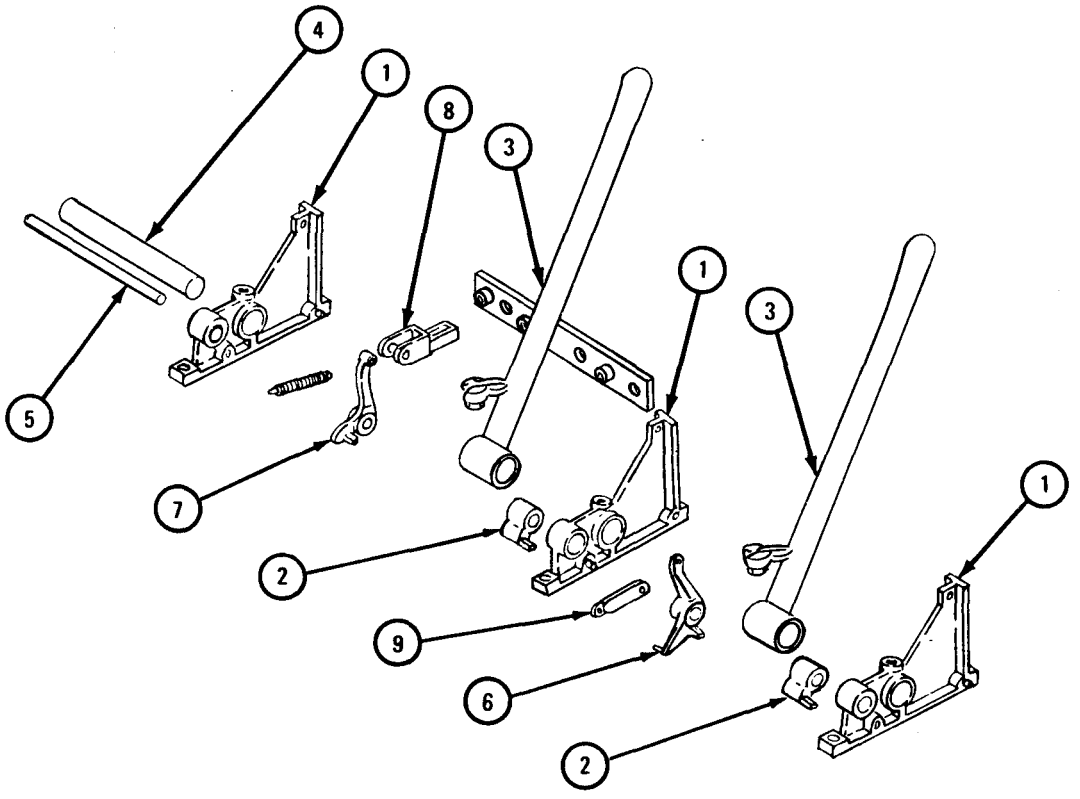

NOTE: CHECK ONLY THOSE PARTS WHICH ARE CALLED OUT. PARTS WITHOUT CALLOUTS ARE SHOWN ONLY FOR REFERENCE PURPOSES.

TA 085118

FRAME 2

1. Check that latch (1), lever (2), rod (3), handle (4), spring (5), and retainer (6) have no cracks, breaks or other damage. If parts are damaged, get new part.
2. Check that screw (7), clevis pin (8) and two guides (9) have no thread damage or other damage. If parts are damaged, get new part.

END OF TASK

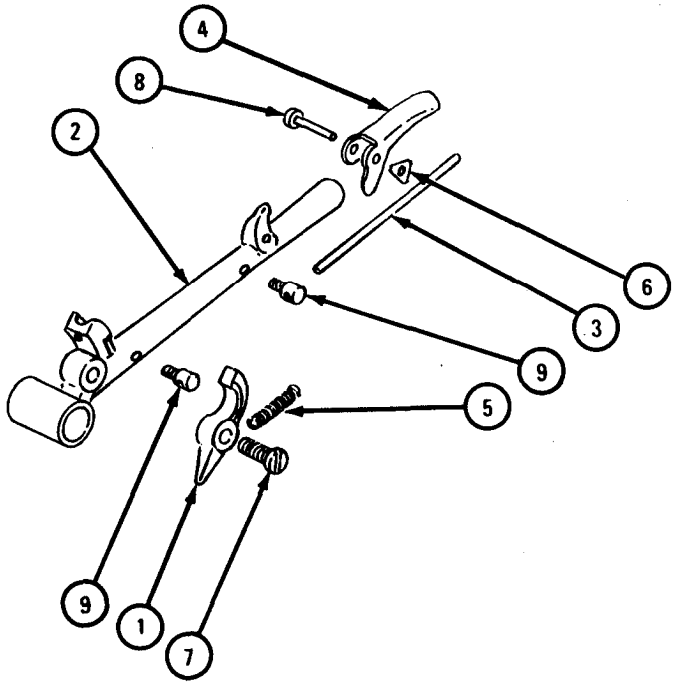

TA 085119

e. Assembly.

FRAME 1

1. Put in screw (1) and nut (2).
2. Put in two guides (3). Put rod (4) through guides.
3. Put in handle (5), clevis pin (6), and retaining lock (7).
4. Put on latch (8), screw (9), and spring (10).
5. Do steps 1 through 4 for other lever.

GO TO FRAME 2

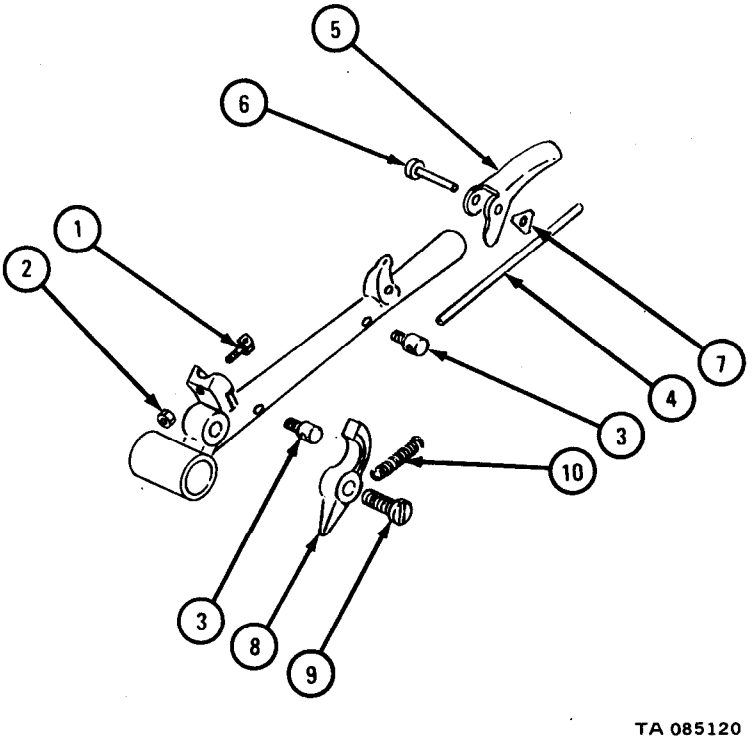

FRAME 2

1. Put roller shaft (1) and lever shaft (2) in bracket (3).
2. Put in screw (4) and nut (5).
3. Put in clevis (6) and pin (7).
4. Put on release lever (8) and retainer (9). Put on spring (10).

GO TO FRAME 3

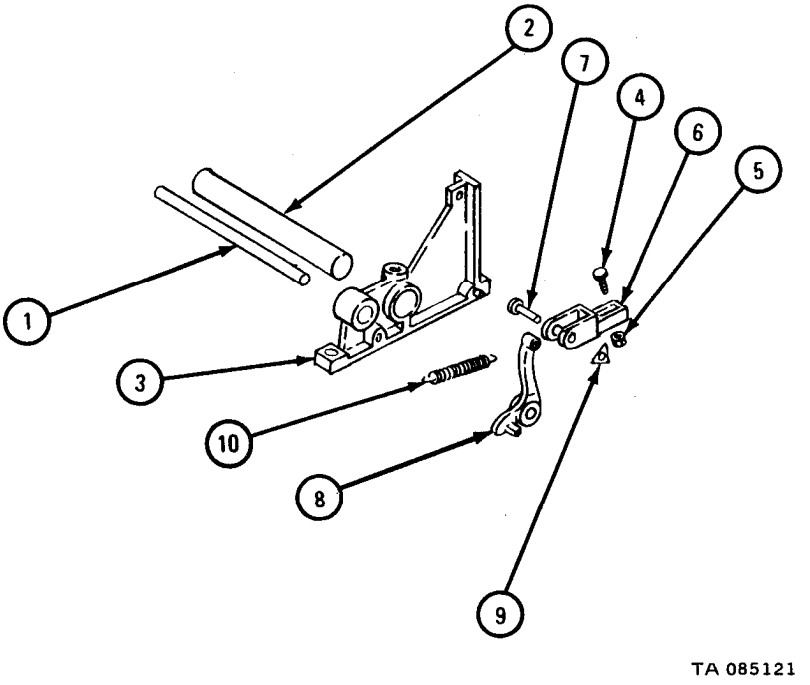

FRAME 3

1. Put on trip cam (1). Tighten setscrew (2). Put on bearing sleeve (3) and lever (4).
2. Put on bracket (5).
3. Put on fusible link (6) and cotter pin (7). Put on fisible link release lever (8) and cotter pin (9).
4. Do step 1 for other lever.

GO TO FRAME 4

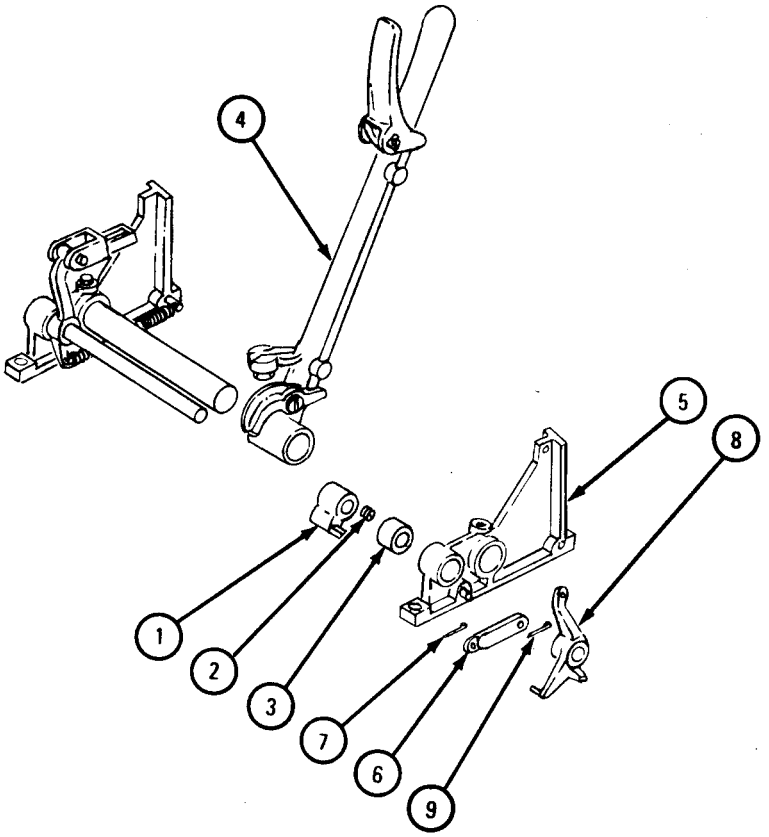

TA 085122

FRAME 4

1. Put on bracket(1). Put in three screws(2).
2. Put on bar (3). Put in three screws (4).

GO TO FRAME 5

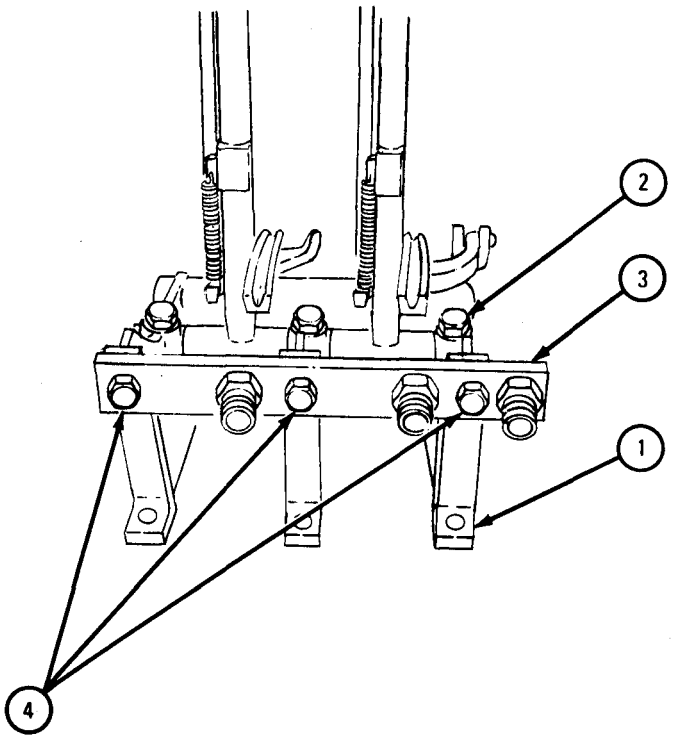

TA 085123

FRAME 5

1. Put on fusible link release lever spring (1). Put on two lever springs (2).

NOTE

Follow-on Maintenance Action Required:

Replace discharge valve operating lever. Refer to TM 9-2320-209-20.

END OF TASK

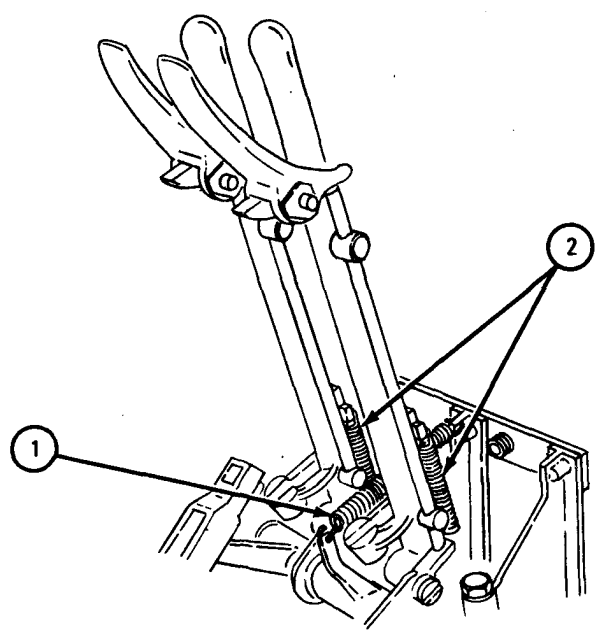

TA 085124

f. Test.

NOTE

Fuel discharge valve operating lever must be put back on truck to do this test. Refer to TM 9-2320-209-20.

FRAME 1

1. Turn bearing sleeves (1). Bearing sleeves (1) must turn freely.
2. Move two levers (2). Be sure two latches (3) move freely and catch both bearing sleeves (1).

GO TO FRAME 2

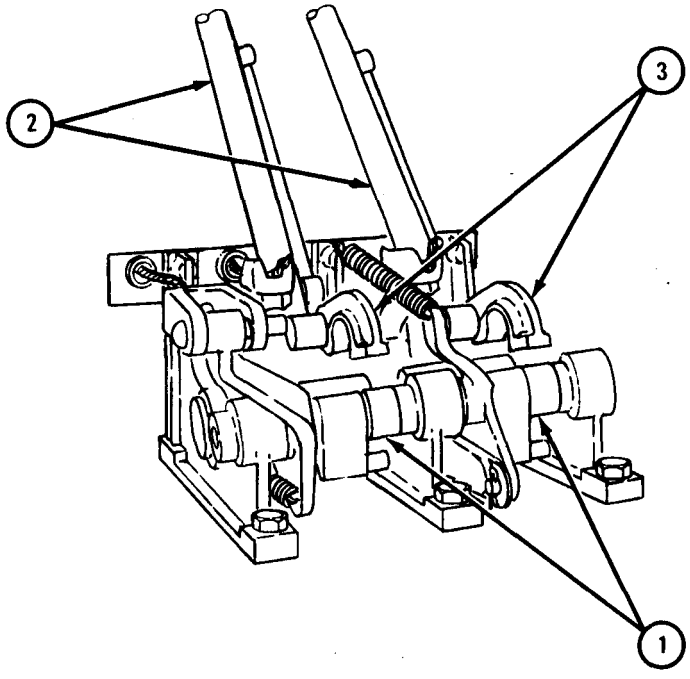

TA 085296

FRAME 2

1. Pull lever (1). Hook latch (2) on bearing sleeve (3).
2. Pull emergency release cable (4). Emergency release lever (5) must turn trip cam (6) and take off latch (2) from bearing sleeve (3). Lever (1) should go back to original position.
3. Do steps 1 and 2 for lever (7).

GO TO FRAME 3

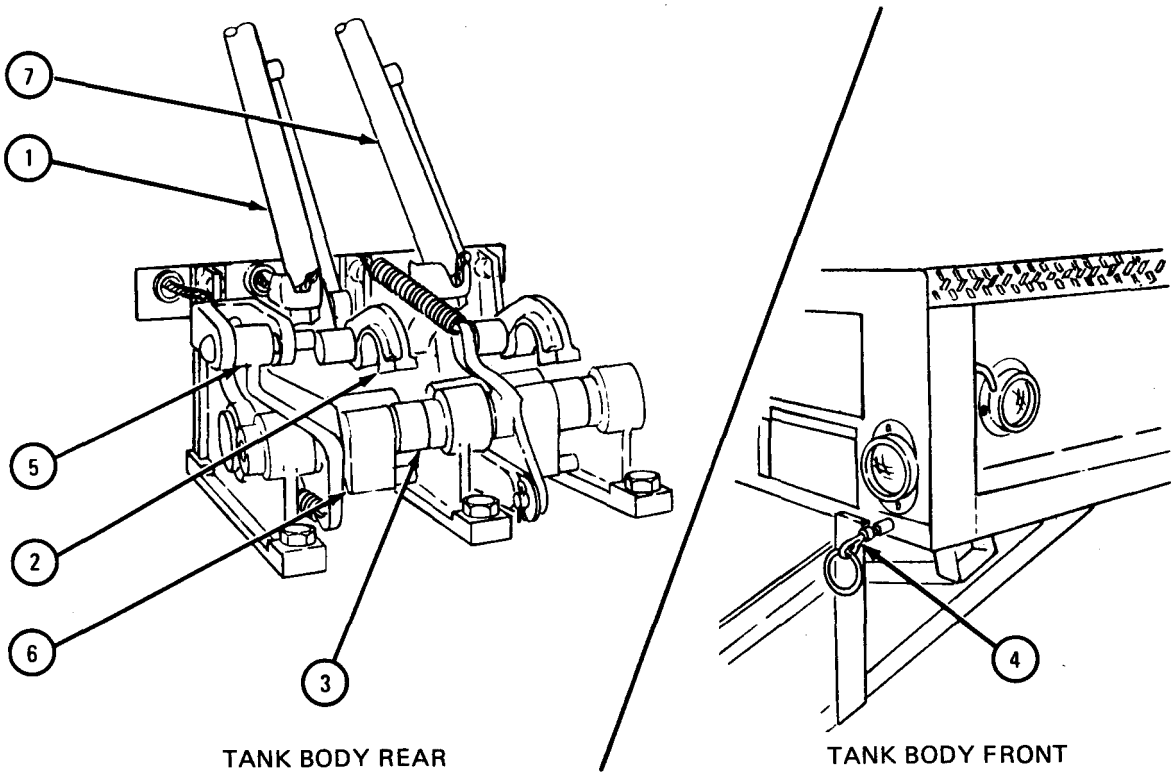

FRAME 3

1. Pull two levers (1). Hook two latches (2) on two bearing sleeves (3).
2. Pull emergency release cable (4). Emergency release lever (5) should turn two trip cams (6) and release two latches (2). Levers (1) should go back to original position.
3. Do step 1 again.

GO TO FRAME 4

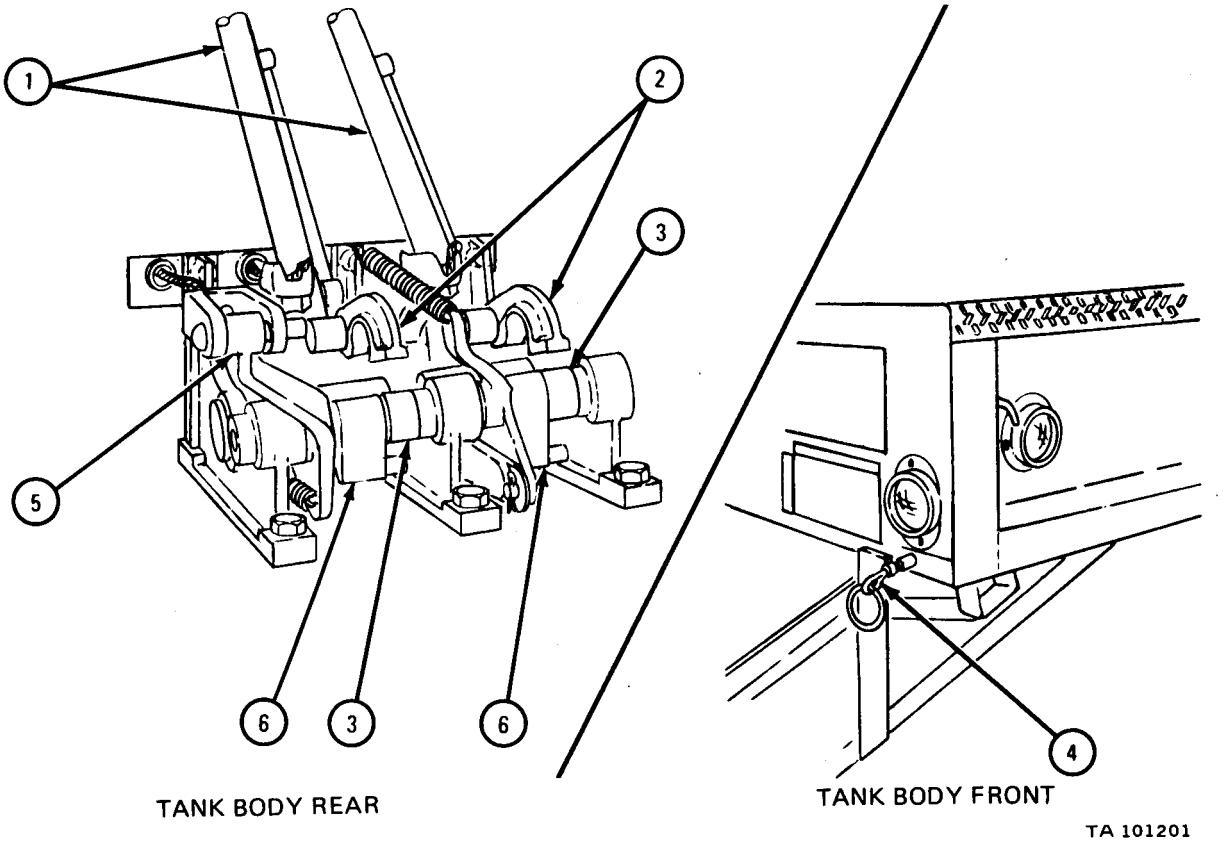

FRAME 4

1. Take out cotter pin (1). Slide off fusible link (2). Fusible link release lever spring (3) should force fusible link release lever (4) to turn two trip cams (5) and unhook two latches (6).
2. Make sure that both levers (7) go back to original position.
3. Put fusible link (2) in place. Put in cotter pin (1).

NOTE

Follow-on Maintenance Action Required:

Close rear compartment doors.

END OF TASK

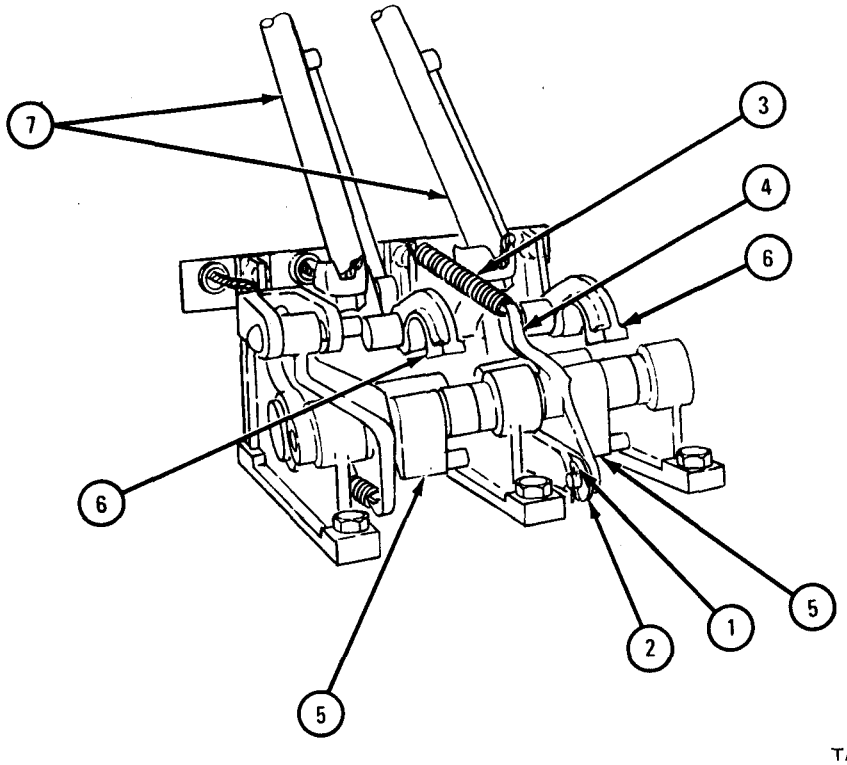

TA 101202

17-25. DISCHARGE VALVE WITH SCREEN REPAIR.

NOTE

Discharge valve with screen assemblies are the same for fuel and water tank trucks except where noted.

TOOLS: No special tools required.

SUPPLIES: Solvent, dry cleaning, type II (SD-2), Fed. Spec P-D-680
Disk, pn 7326259

PERSONNEL: One

EQUIPMENT CONDITION: Truck parked, engine off, handbrake set.

a. Preliminary Procedure. Remove discharge valve. Refer to TM 9-2320-209-20.

b. Disassembly.

FRAME 1

1. Take off strainer element (1).

WARNING

Compressed spring (2) is under bonnet (3). Use care when taking off bonnet to avoid injury to personnel.

2. Take off bonnet (3). Take out spring (2).
3. Take out disk assembly (4).
4. Take out nut (5), disk (6), and upper plunger (7) from lower plunger (8). Throw away disk.

GO TO FRAME 2

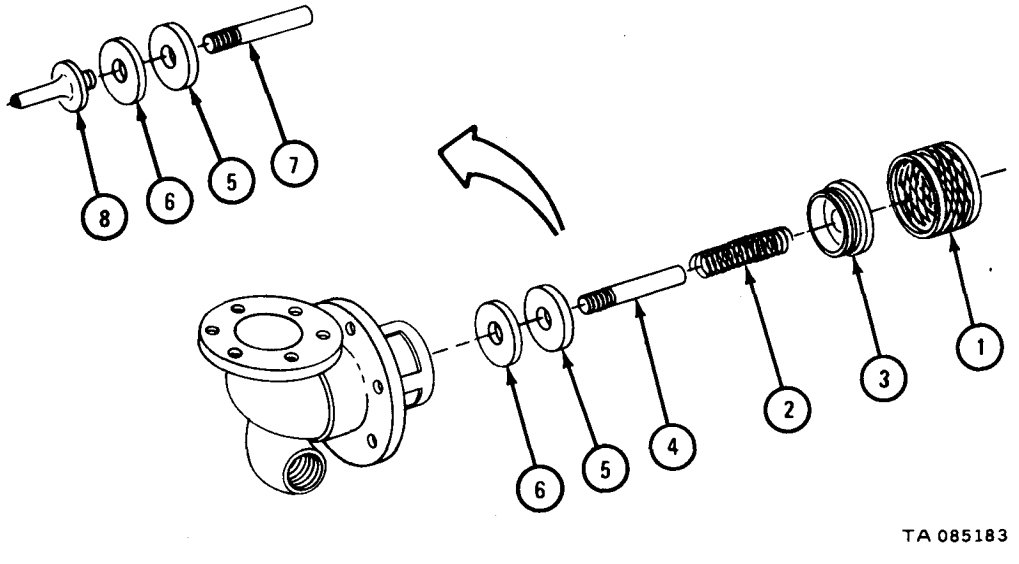

FRAME 2

1. Takeout nut (1), packing(2), and stem (3). Throw away packing.
2. Take out cam (4).

END OF TASK

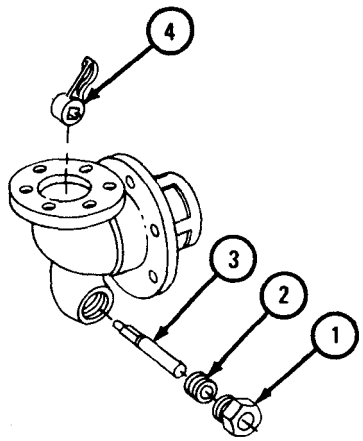

TA 085184

WARNING

Dry cleaning solvent is flammable. Do not use near an open flame. Keep a fire extinguisher nearby when solvent is used. Use only in well-ventilated places. Failure to do this may result in injury to personnel and damage to equipment.

c. Cleaning. Wash all parts in dry cleaning solvent. When screen is dry, wash parts with hot water.

d. Inspection.

FRAME 1

1. Check that housing (1) has no cracks, damaged packing or damaged threads.
2. Check that valve seat (2) is not scratched or scored.
3. Check that strainer element (3) has no damage or small holes.
4. Check that upper and lower plungers (4 and 5) are not scored and have no damaged threads.
5. Check that bonnet (6) and upper nut (7) have no damaged threads.
6. Check that plunger spring (8) has no breaks or distortion.

GO TO FRAME 2

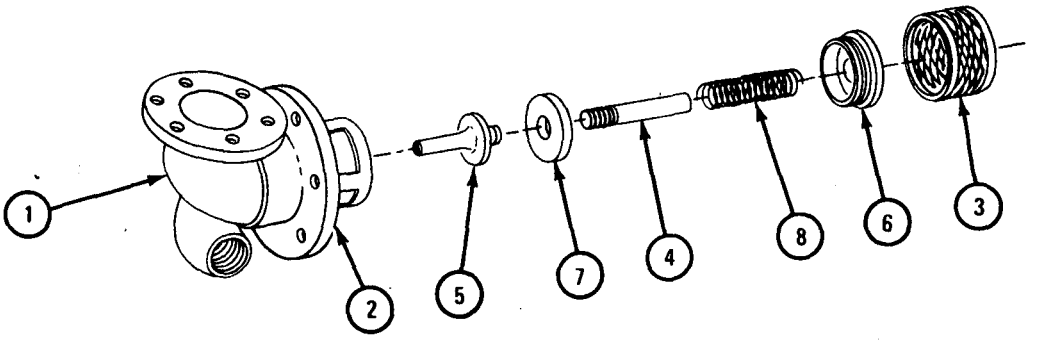

NOTE: CHECK ONLY THOSE PARTS WHICH ARE CALLED OUT. PARTS WITHOUT CALLOUTS ARE SHOWN ONLY FOR REFERENCE PURPOSES.

TA 085185

FRAME 2

1. Check that stem (1) and cam (2) are not scored or distorted.
2. Check that nut (3) has no damaged threads.

END OF TASK

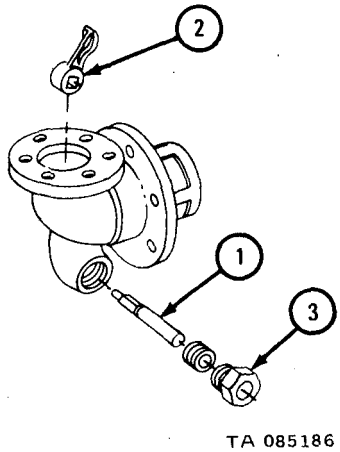

FRAME 1

1. If housing (1) or valve seat (2) is damaged, get new housing.
2. Small holes in strainer element (3) can be fixed by soldering. If strainer element has more damage, get a new one.
3. If upper or lower plungers (4 and 5) are damaged, get a new part.
4. If bonnet (6), upper nut (7), or plunger spring (8) is damaged, get a new part.

GO TO FRAME 2

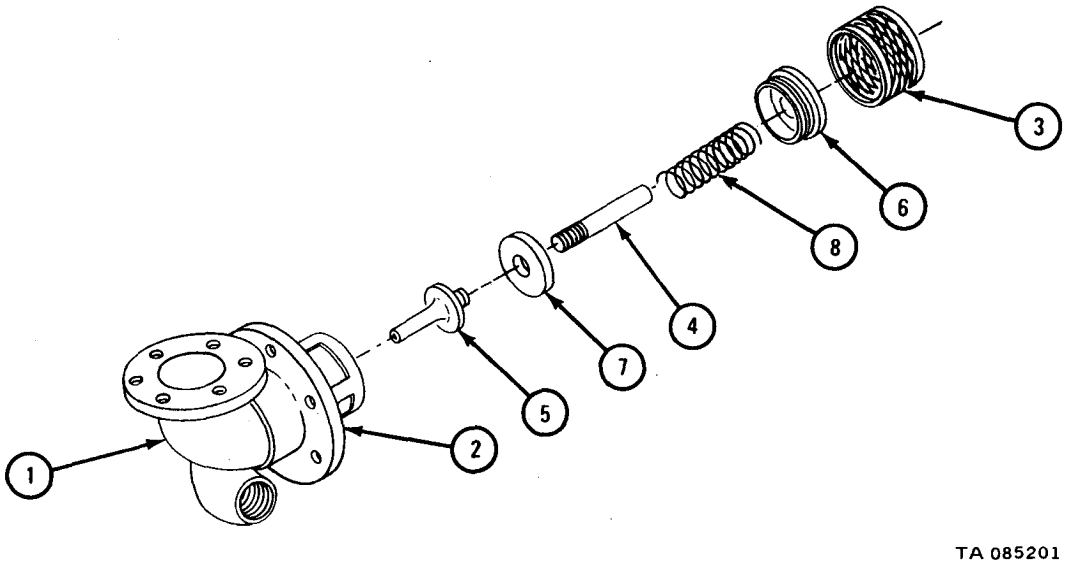

FRAME 2

1. If stem (1) or cam (2) is damaged, get a new part.
2. If nut (3) is damaged, get new parts.

END OF TASK

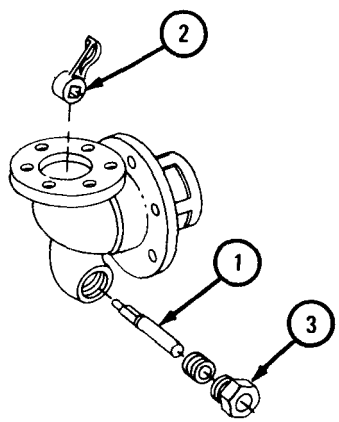

TA 085202

f. Assembly.

FRAME 1

1. Put on cam (1). Put in stem (2), packing (3), and nut (4).

GO TO FRAME 2

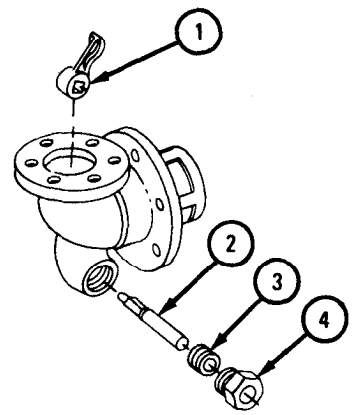

TA 085187

FRAME 2

1. Put disk (1) on lower plunger (2).
2. Put upper nut (3) and upper plunger (4) on lower plunger (2).
3. Put disk assembly (5) in housing (6).
4. Put on spring (7), bonnet(8), and strainer element (9).

NOTE

Follow-on Maintenance Action Required:

Replace discharge valve, Refer to TM 9-2320-209-20.

END OF TASK

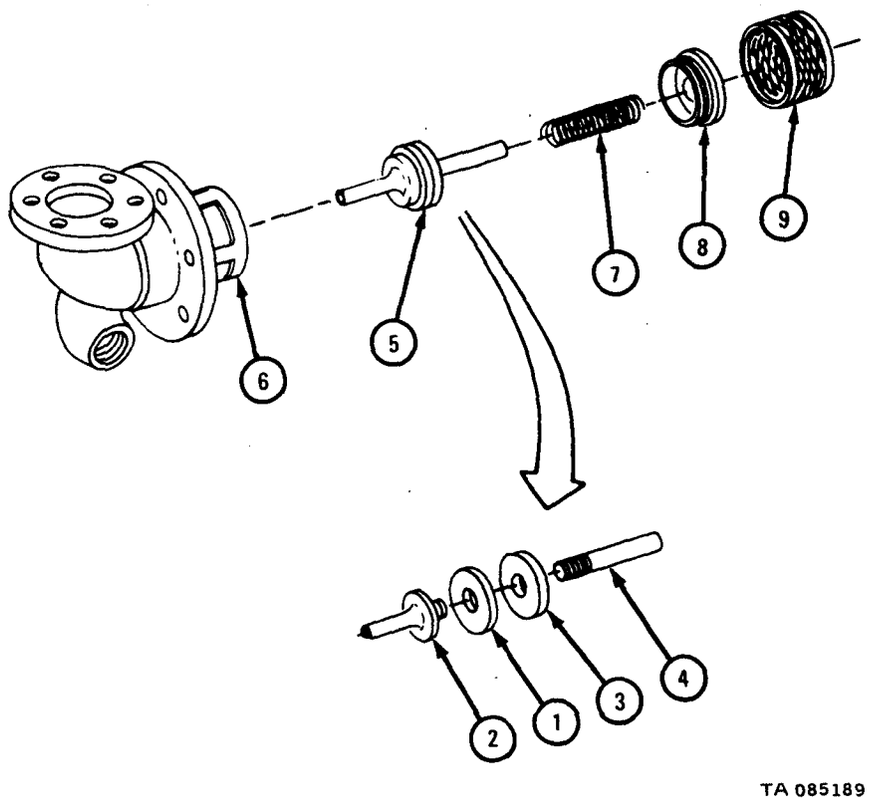

17-26. CENTRIFUGAL PUMP REPAIR (TRUCKS M49A1C, M49A2C, M50A1, M50A2, AND M50A3) .

TOOLS : No special tools required

SUPPLIES : Lubricating Oil (OG/HDO 10, MIL-L-2104)
Gasket cement MIL-C-10523
Artillery and automotive grease type GAA MIL-G-10924
Solvent dry cleaning Type II (SD-2) Fed. Spec P-D-680
Test fluid ESR-34C

PERSONNEL: One

EQUIPMENT CONDITION : Truck parked, engine off, handbrake set.

a. Preliminary Procedure. Remove centrifugal pump on truck. Refer to TM 9-2320-209-20.

b. Disassemble.

FRAME 1

1. Take out four screws (1) and lockwashers (2) and take off intake strainer assembly (3). Throw away gasket (4).
2. Take out eight screws (5) and lockwashers (6). Take off cover (7), flange (8) and two gaskets (9). Throw away gaskets.

GO TO FRAME 2

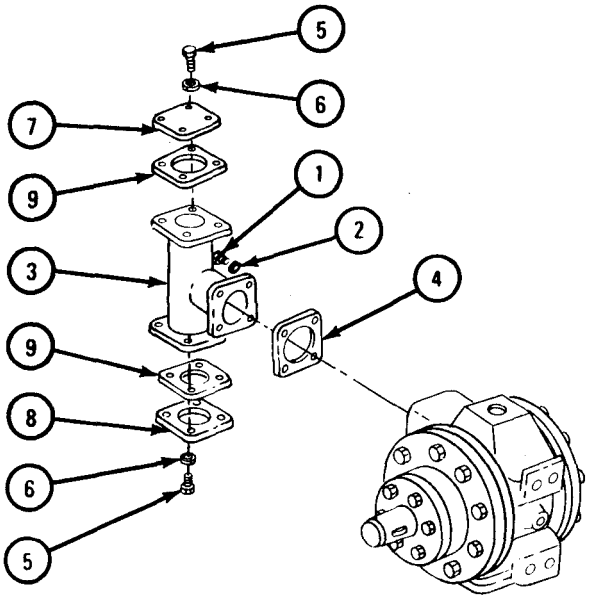

TA 084314

FRAME 2

1. Take out bypass valve cap (1). Throw away gasket (2).
2. Take out setscrew (3).
3. Take out four screws (4) and lockwashers (5). Take off cover (6) and gasket (7). Throw away gasket.
4. Take out valve guide (8), spring (9) and valve (10).

GO TO FRAME 3

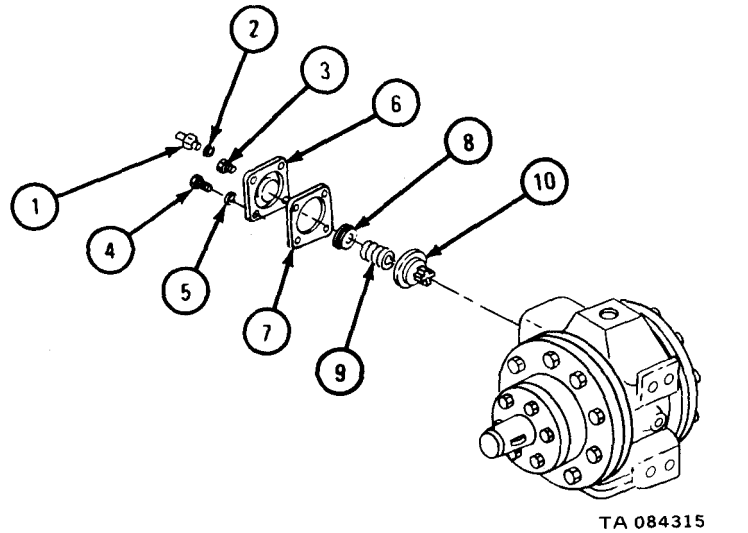

FRAME 3

1. Takeout key (1). Take out two sets of eight screws (2) and lockwashers (3). Take off two heads (4).
2. Takeout two pressure fittings (5) and 45° fittings (6).
3. Take out two sets of four screws (7) and lockwashers (8). Take off cover (9) and gasket (10). Throw away gasket.

GO TO FRAME 4

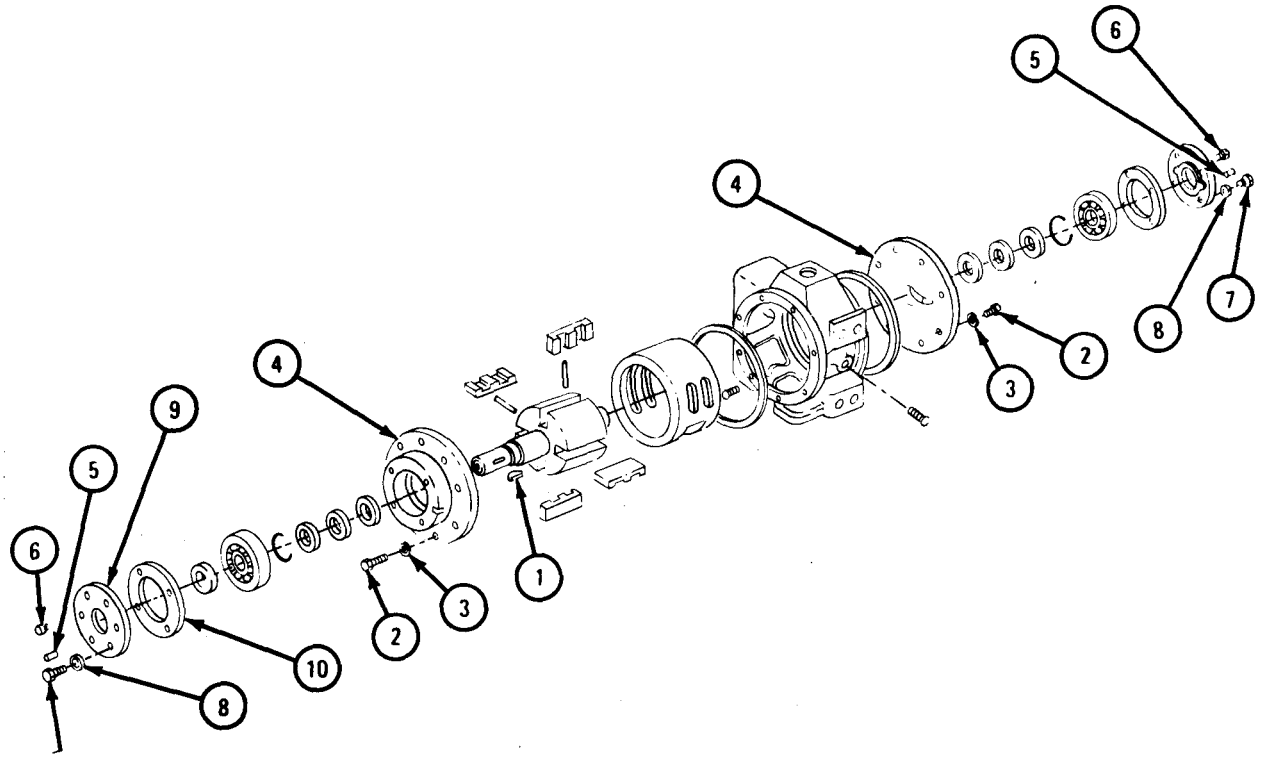

TA 084316

FRAME 4

1. Take out two bearings (1) and seals (2). Throw away all seals.
2. Using snapring pliers, take out two snaprings (3) , four seals (4) and two washers (5).
3. Take out rotor (6) , four vanes (7) and two rods (8).
4. Mark liner (9) and casing (10) with punch for easy assembly. Slide liner out .

END OF TASK

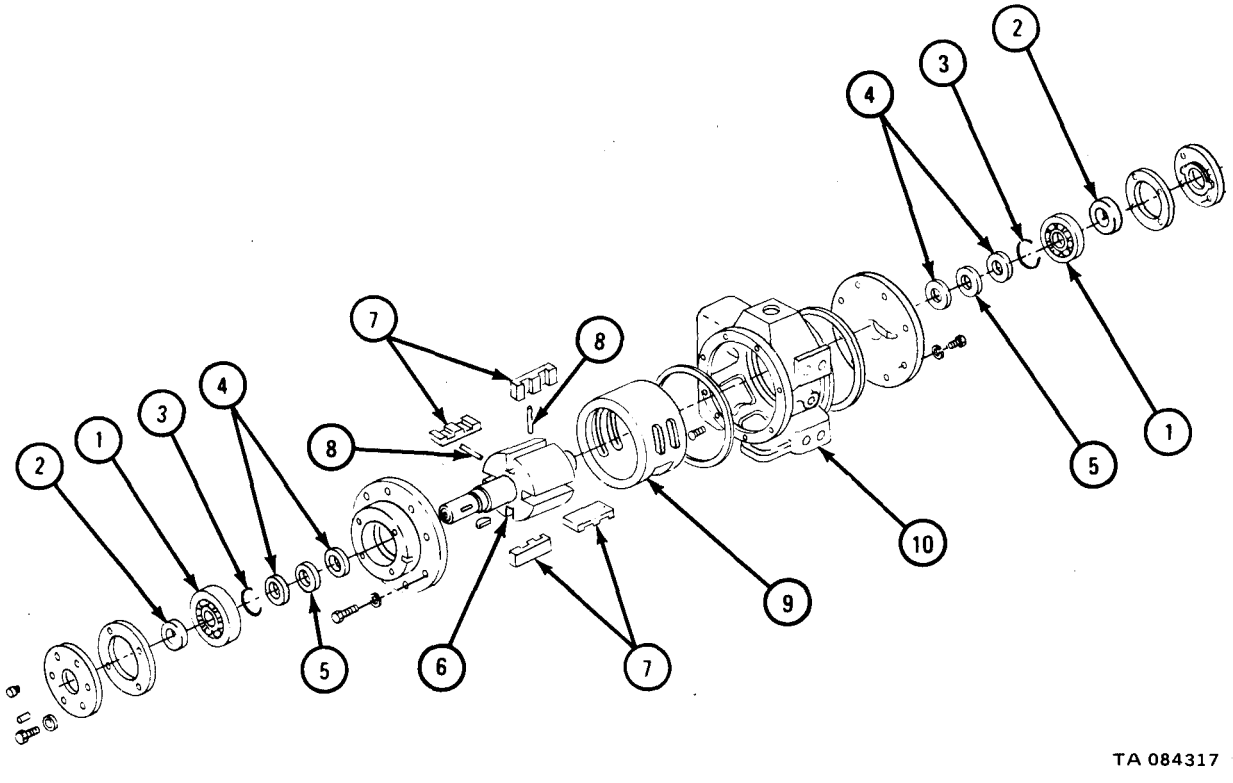

c. Cleaning.

WARNING

Dry cleaning solvent vapors can be harmful if inhaled. Work in well ventilated area. Dry cleaning solvent is flammable. Do not use near open flame. Keep fire extinguisher nearby. Dry cleaning solvent will dry and crack skin. Wear gloves when working with solvent.

CAUTION

Do not spin bearing at any time. Spinning will seriously damage bearings.

After cleaning, keep bearings clean and dry. Dirt and moisture can damage bearings.

NOTE

All old lubricant must be taken off bearings during cleaning. Do soaking and clapping steps over as necessary to take off all old lubricant.

(1) Using degreaser and solvent, soak bearing to loosen lubricant.

(2) If lubricant is left on bearing after soaking, clap bearing against heel of hand to loosen lubricant.

(3) Air dry bearing.

d. Inspection.

FRAME 1

1. Put oil on two bearings (1). Turn bearing and look for roughness, pitting, scoring, cracks or chipped areas.
2. Check rotor (2) and two snaprings (3) for scoring, pitting or cracks.

NOTE

Rotor oil seal contact surface must have a uniform high polish. Minor surface defects may be removed by polishing with crocus cloth.

3. Check rotor (2) for cracks or breakage at edge of vane slots (4).

GO TO FRAME 2

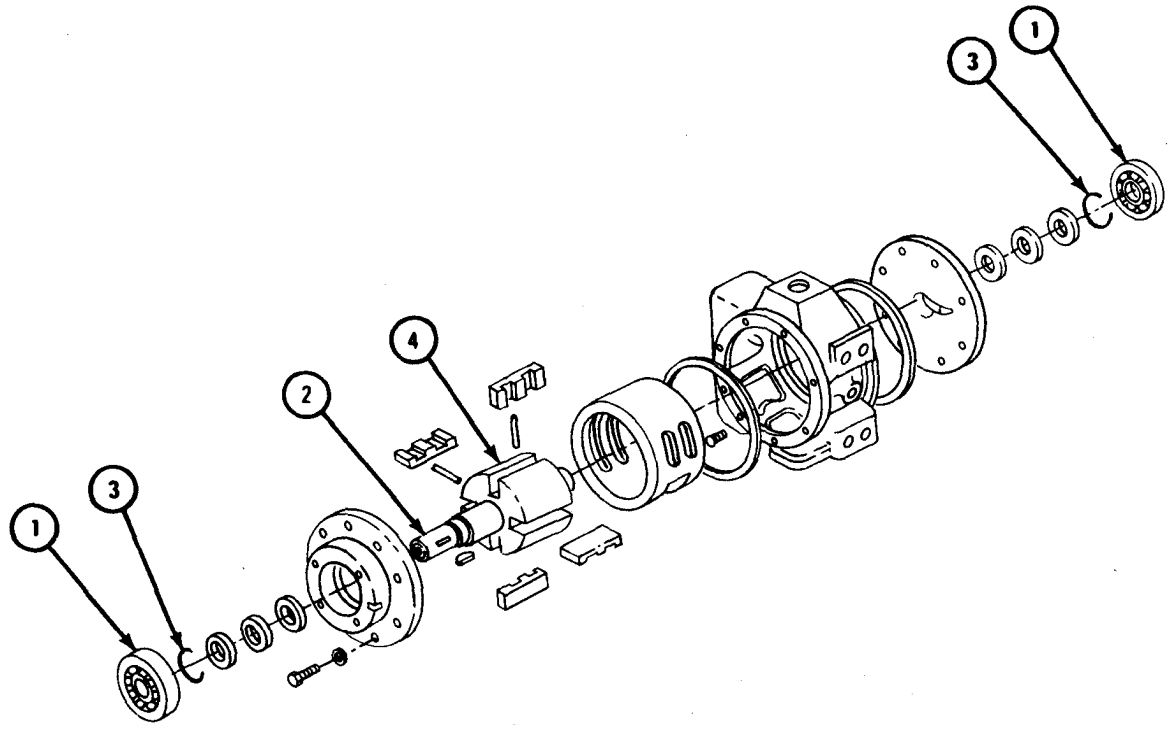

NOTE: CHECK ONLY THOSE PARTS WHICH ARE CALLED OUT IN THIS FRAME. PARTS WITHOUT CALLOUTS ARE SHOWN ONLY FOR REFERENCE PURPOSES OR ARE CHECKED IN ANOTHER FRAME.

TA 084318

FRAME 2

1. Check liner (1) for scores or pitting.
2. Check valve (2) and valve seat (3) for pitting, scoring or cracks.
3. Check valve spring (4) for broken or damaged coils.
4. Check valve cover (5) for cracks or breakage.

GO TO FRAME 3

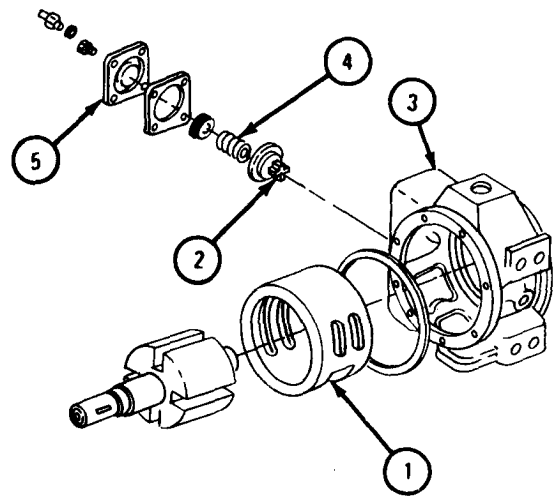

CHECK ONLY THOSE PARTS WHICH ARE CALLED OUT IN THIS FRAME. PARTS WITHOUT CALLOUTS ARE SHOWN ONLY FOR REFERENCE PURPOSES OR ARE CHECKED IN ANOTHER FRAME.

TA 084319

FRAME 3

1. Check four vanes (1) for scores or other wear.
2. Check two pins (2) and casing (3) for breaks, cracks or other damage. Check all threaded holes for damage.
3. Check strainer (4) for kinks or broken screening.
4. Check two heads (5) for cracks, breakage or wear. Wear must not exceed 0.003-inch in depth. Use micrometer to measure wear.
5. Check two covers (6) for cracks or breakage.

GO TO FRAME 4

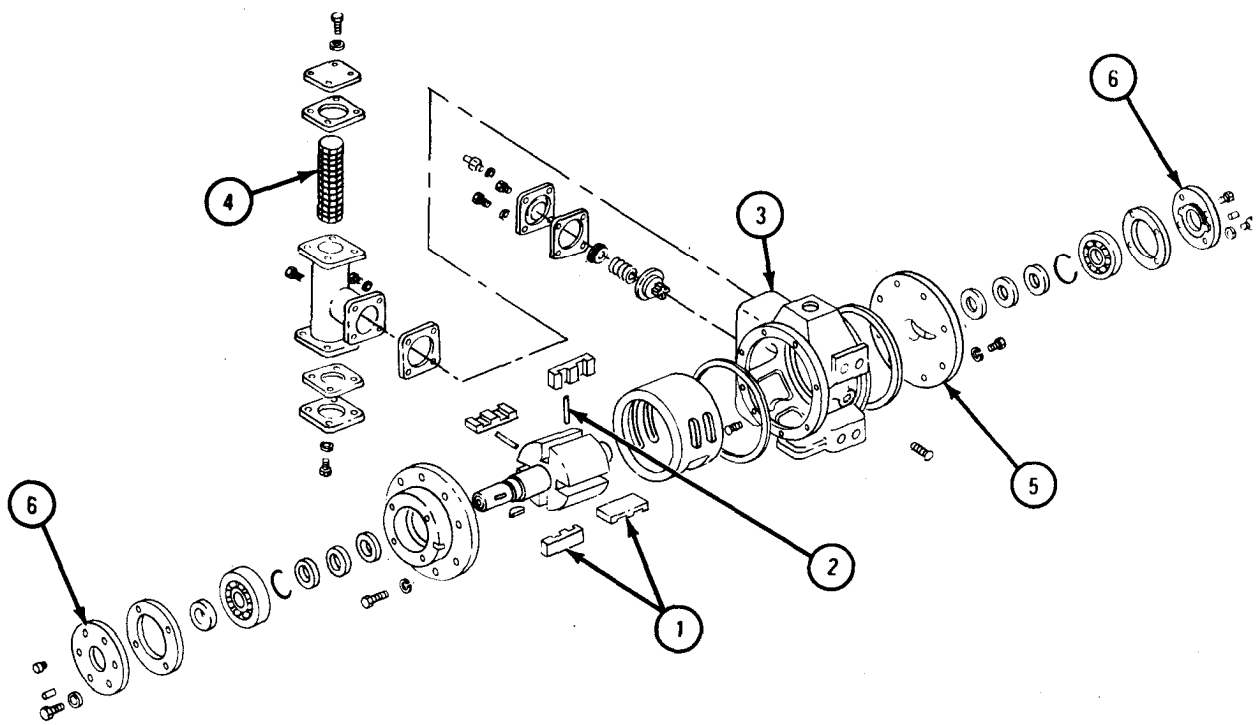

CHECK ONLY THOSE PARTS WHICH ARE CALLED OUT IN THIS FRAME. PARTS WITHOUT CALLOUTS ARE SHOWN ONLY FOR REFERENCE PURPOSES OR ARE CHECKED IN ANOTHER FRAME.

TA 084320

FRAME 4

NOTE

Readings must be within limit given in table 17-1. If readings are not within given limits, throw away part and get a new one.

1. Measure front diameter (1) and rear diameter (2) of rotor shaft.
2. Measure width of four vane slots (3).
3. Measure width of four vanes (4).
4. Measure rotor width (5).

GO TO FRAME 5

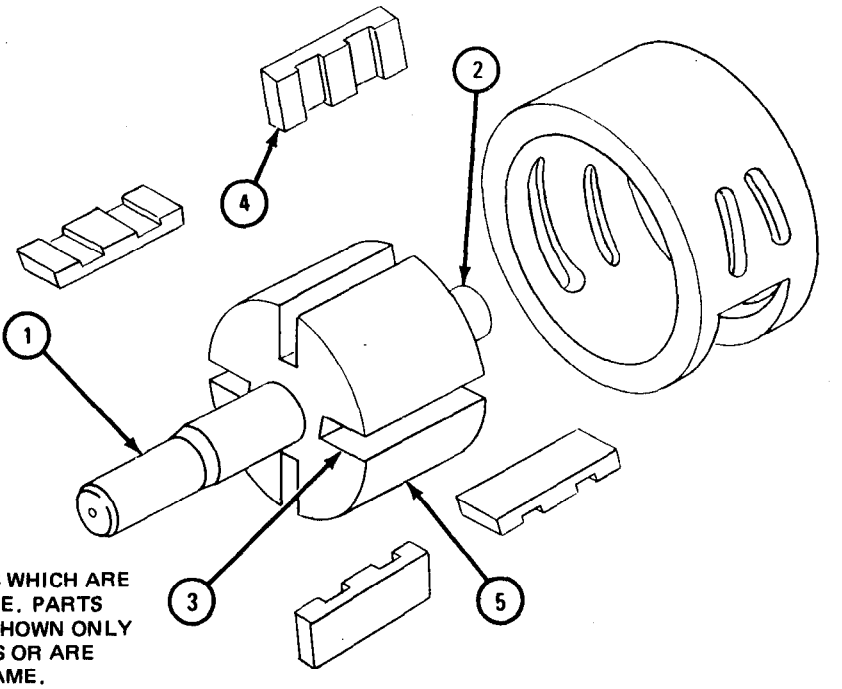

NOTE: CHECK ONLY THOSE PARTS WHICH ARE CALLED OUT IN THIS FRAME. PARTS WITHOUT CALLOUTS ARE SHOWN ONLY FOR REFERENCE PURPOSES OR ARE CHECKED IN ANOTHER FRAME.

TA 118731

Table 17-1. Rotor Shaft and Vane Wear Limits

Index Number	Item /Point of Measurement	Size and Fit of New Parts (inches)	Wear Limit (inches)
1	Rotor shaft front diameter	1.1850 to 1.1860	1.1660
2	Rotor shaft rear diameter	1.1850 to 1.1860	1.1660
3	Vane slot width	0.5000 to 0.5050	None
4	Vane width	1.2400 to 1.2600	1.0625
5	Rotor width	3.4970 to 3.4990	2.4950

FRAME 5

NOTE

Readings must be within limits given in table 17-2. The letter L indicates a loose fit and the letter T indicates a tight fit. If readings are not within given limits, throw away part and get a new one.

1. Measure liner inside diameter (1).
2. Measure thickness of four vanes (2).
3. Measure fit of four vanes (2) in four vane slots (3).

END OF TASK

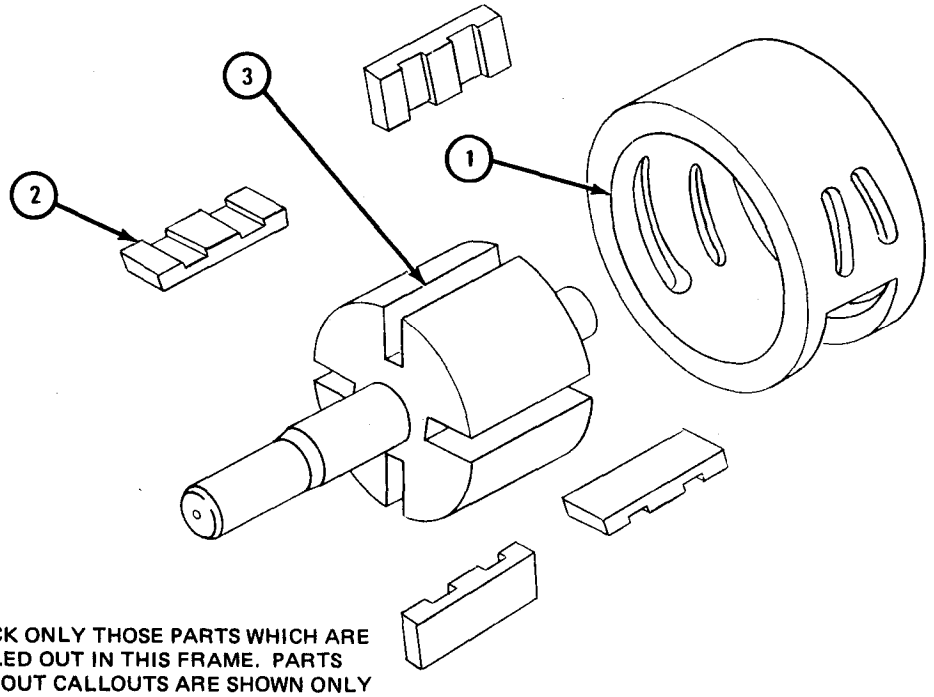

NOTE: CHECK ONLY THOSE PARTS WHICH ARE CALLED OUT IN THIS FRAME. PARTS WITHOUT CALLOUTS ARE SHOWN ONLY FOR REFERENCE PURPOSES OR ARE CHECKED IN ANOTHER FRAME.

TA 118732

Table 17-2. Vane and Liner Wear Limits and Fit

Index Number	Item /Point of Measurement	Size and Fit of New Parts (inches)	Wear Limit (inches)
1	Liner inside diameter	5.000 to 5.0020	None
2	Vane thickness	0.4900 to 0.4950	None
3	Fit of vanes in vane slots	0.0060L to 0.0150L	None

e. Repair.

FRAME 1

1 If bearings (1) or snaprings (2) are damaged, put in new ones.

2. If rotor (3) or vane slots (4) are damaged, put in new rotor.

3. If diameter of liner (5) is not within limits, put in new one.

4. If valve (6) or valve seat (7) are damaged, put in new ones.

5. If valve spring (8), cover (9) or guide (10) are damaged, put in new ones.

GO TO FRAME 2

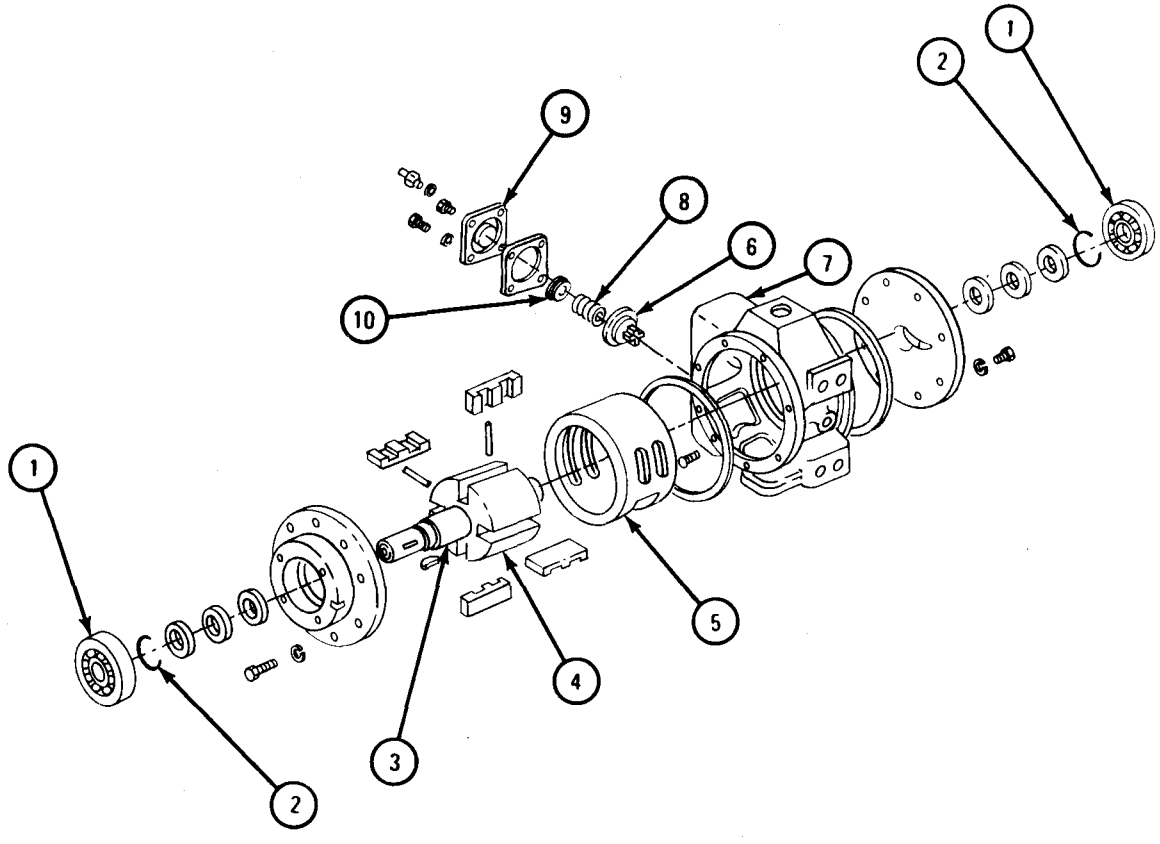

NOTE: PARTS WITHOUT CALLOUTS ARE SHOWN ONLY FOR REFERENCE PURPOSES.

TA 084321

FRAME 2

1. If vanes (1) are worn or not within table limits, put in new ones.
2. If pins (2), heads (3), covers (4) or casing (5) are damaged, put in new part.
3. If strainer (6) is kinked or broken, put in new one.

END OF TASK

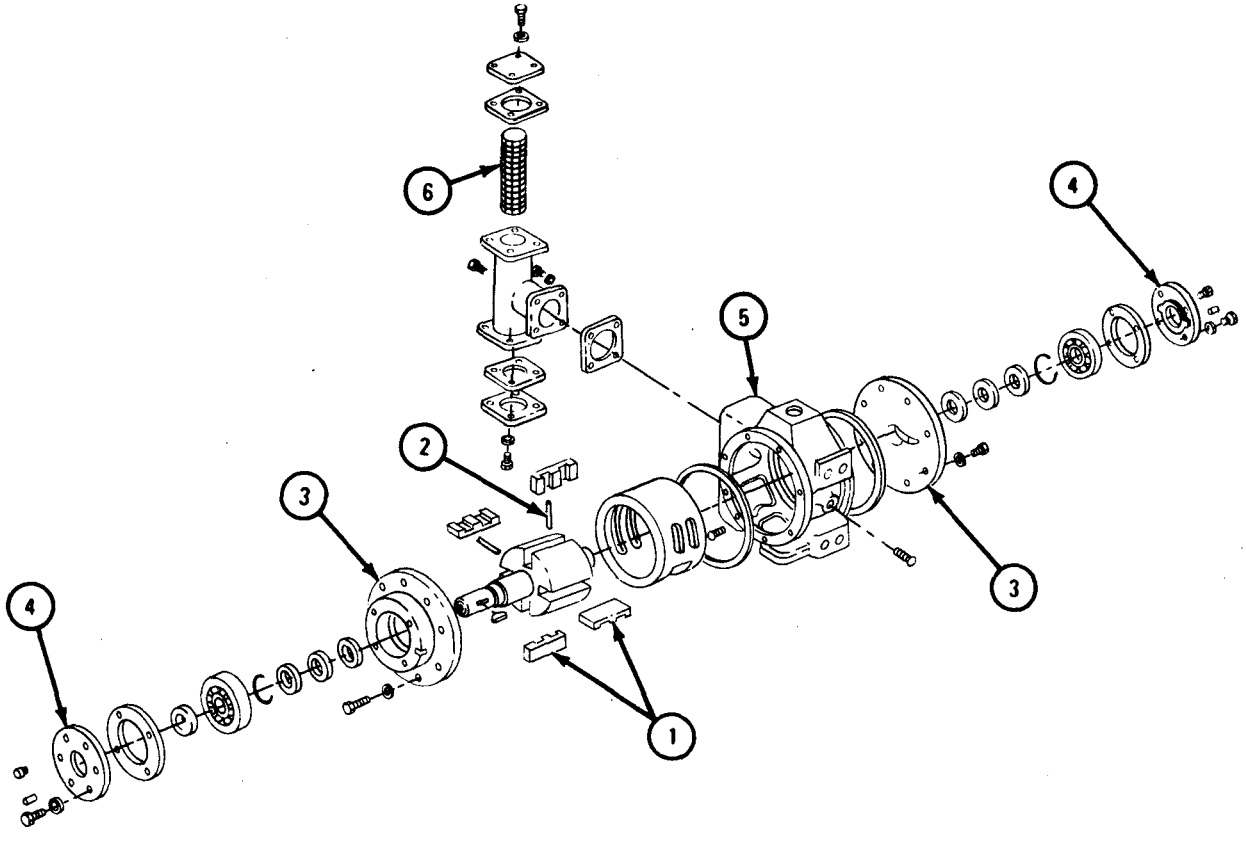

NOTE: PARTS WITHOUT CALLOUTS ARE SHOWN ONLY FOR REFERENCE PURPOSES.

TA 084322

f. Assembly.

FRAME 1

1. Press new oiI seal (1) into inboard bearing cover (2) with sealing lip toward bearing side of cover.
2. Press new oil seal (1) into inboard head (3) with sealing lip toward casing (4) side of head.
3. Put in oil seal washer (5) against seal with its bevel pointing in same direction.
4. Put in oil seal (1) in head in same manner, Put in snapring (6).

GO TO FRAME 2

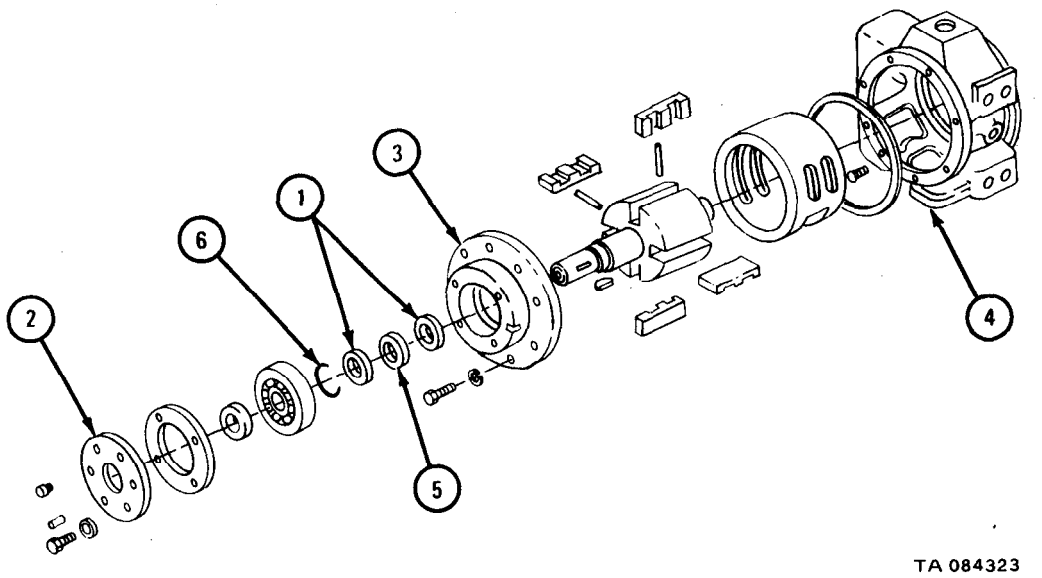

FRAME 2

1. Put snapring (1) and ball bearing (2) in. Press bearing and snapring (1 and 2) in outboard head (3).
2. Put new bearing cover gasket (4) and outboard bearing cover (5) on head.
3. Put in four lockwashers (6) and capscrews (7).
4. Put pressure relief lubrication fitting (8) and 45° lubrication fitting (9) in cover.
5. Put a thin coat of gasket cement on portion of heads contacting casing (10). Put head (3) on casing.
6. Put in eight lockwashers (6) and capscrews (7).

GO TO FRAME 3

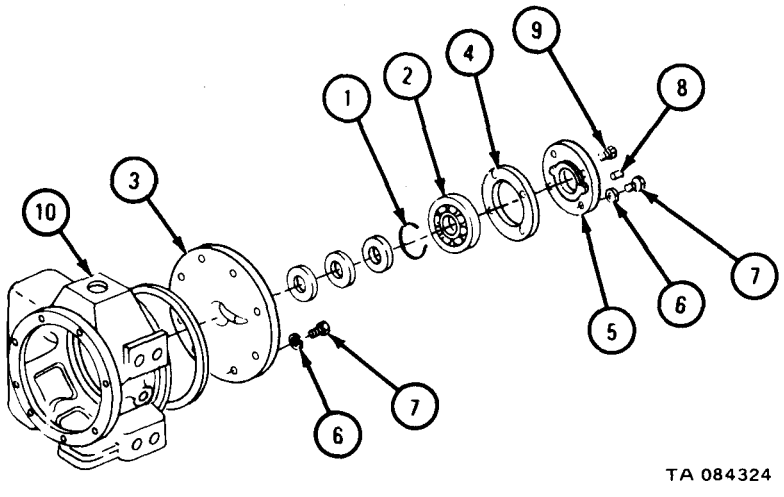

FRAME 3

1. Find punch marks made at time of diassembly. Put liner (1) in casing (2). Be sure pin hole in liner is at top of pump.

CAUTION

Replacement rotors are bronze with stainless steel shaft. This makes the pump assembly suitable for either fuel or water tank bodies. If rotor is not replaced, look to see if rotor is bronze or cast iron. If rotor is cast iron, put a tag on reading "fuel tank truck only". Cast iron and water makes rust and can damage pump.

2. Place casing (2) on a bench with outboard head (3) down. Place a pushrod pin (4) in each of the two holes through the rotor (5). Put rotor in pump liner (1).
3. Place casing (2) on bypass valve (6) side, while holding rotor shaft (5) against outboard head (3).
4. Turn rotor (5) by hand. As slot (7) reaches top, put in vanes (8). Be sure beveled edge is against liner (1) and pressure grooves on right side of vane.

GO TO FRAME 4

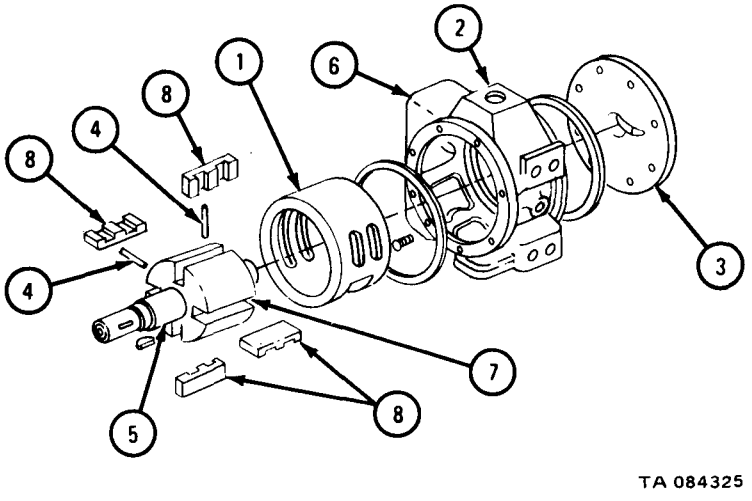

FRAME 4

1. Put snapring (1) in ball bearing (2). Press bearing and snapring into inboard head (3).
2. Put new bearing cover gasket (4) on head (3). Put inboard bearing cover (5) on head.
3. Put in four lockwashers (6) and capscrews (7).
4. Put pressure relief lubrication fitting (8) and 45° lubrication fitting (9) in cover (5).

GO TO FRAME 5

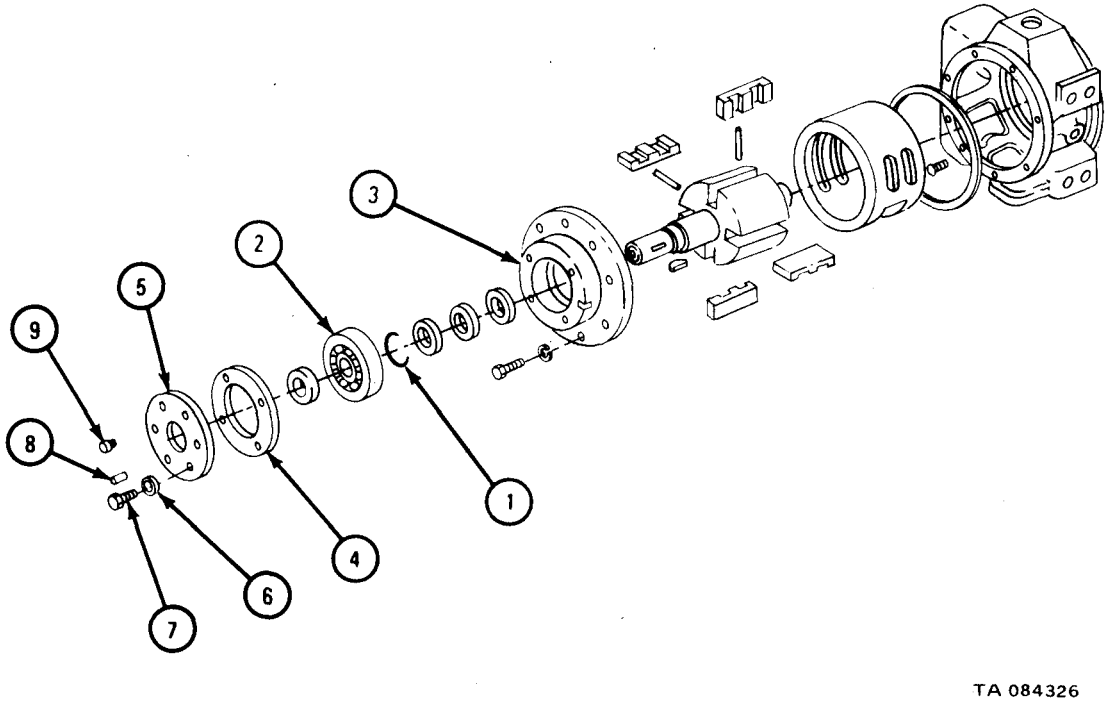

FRAME 5

1. Put thin coat of gasket cement to part of head (1) next to casing (2). Place casing on bench, outboard head (3) down.
2. Push inboard head (1) down rotor (4). Turn inboard head to seat pin hole of liner (5).
3. Put in eight lockwashers (6) and screws (7).

NOTE

If rotor (4) binds, loosen screws (7) and tap inboard head (1) with hammer. Tighten screws.

4. Put in key (8) in end of rotor (4).

GO TO FRAME 6

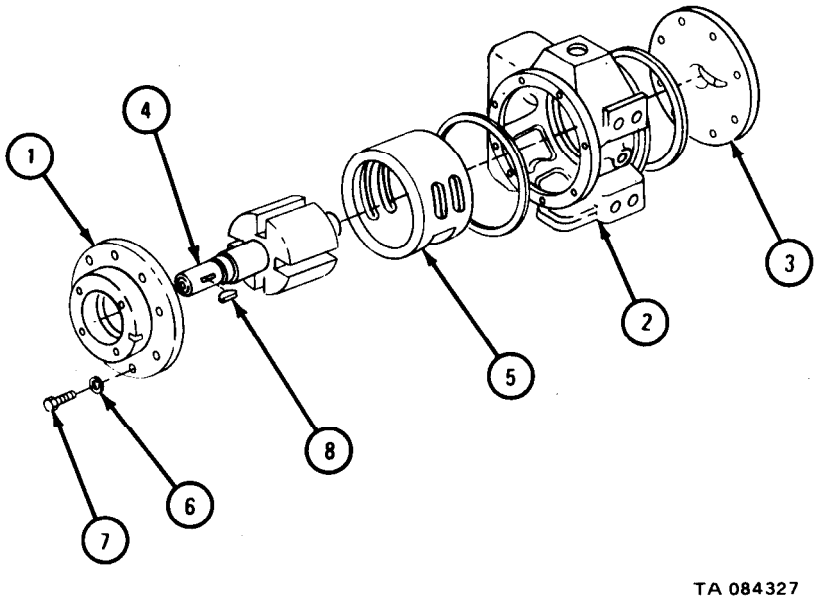

FRAME 6

1. Put bypass valve (1), bypass valve spring (2) , and bypass valve spring guide (3) in casing (4). Put new bypass valve cover gasket (5) and bypass valve cover (6) in place.
2. Screw in four lockwashers and screw (7).
3. Put in bypass valve adjusting set screw (8) in cover.

NOTE

Do not put in bypass valve cap (9) and gasket (10) until after test and adjustment para 17-26g.

GO TO FRAME 7

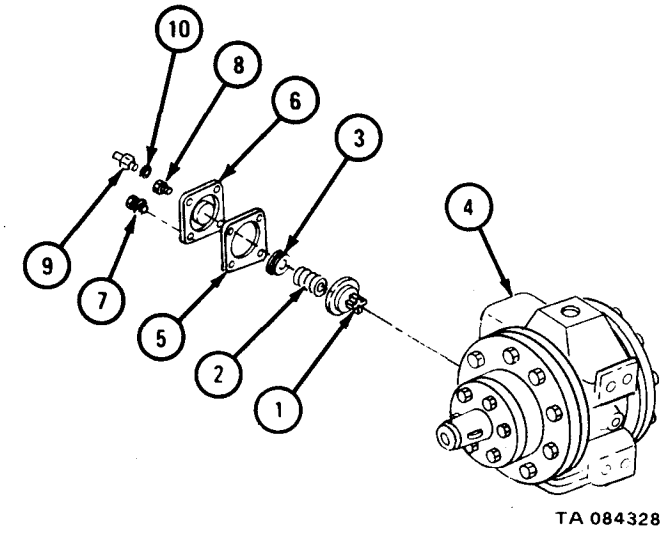

FRAME 7

1. Put new strainer gasket (1) and body (2) on casing (3).
2. Put in four lockwashers and capscrews (4).
3. Put strainer (5) in body (2) with handle toward cover end of body.
4. Put new body cover gasket (6), body cover (7), inlet flange gasket (8) and inlet flange (9) on body. Put in eight lockwashers and screws (10) that hold covers (7 and 9) to body (2).

GO TO FRAME 8

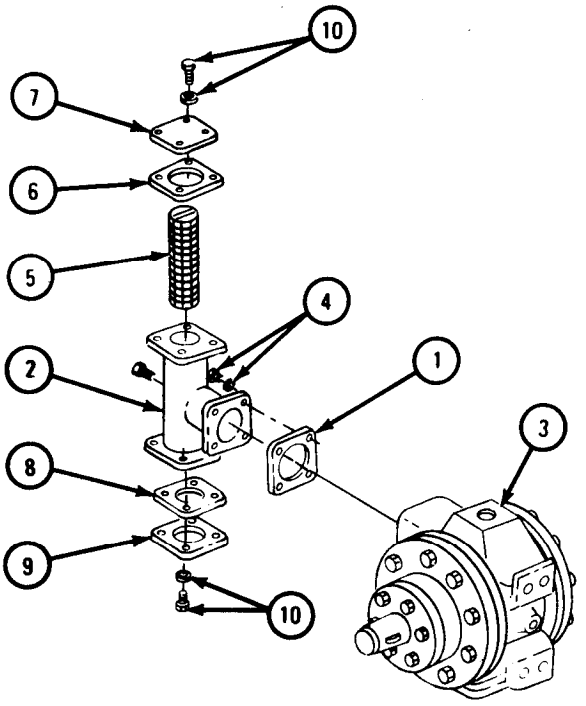

TA 084329

FRAME 8

1. Put pipe plug (1) in body (2).
2. Put two pipe plugs (3) in casing (4).

END OF TASK

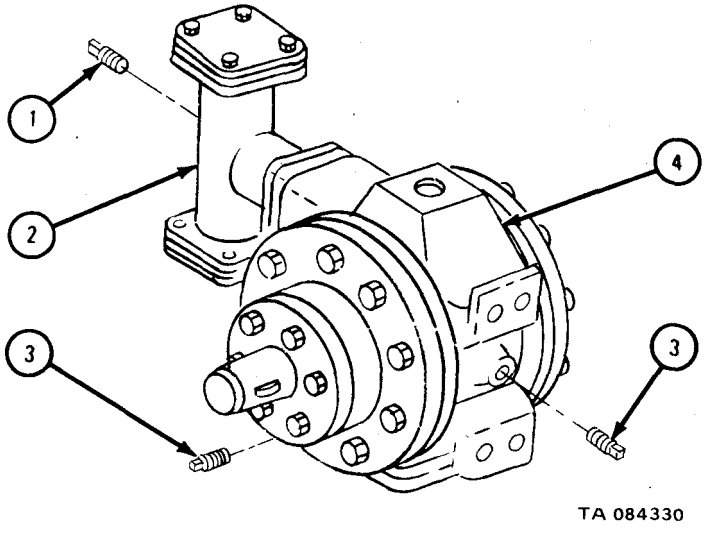

g. Test and Adjustment.

FRAME 1

1. Lubricate pump (1) at inboard bearing cover (2) and outboard bearing cover (3) with grease, specification MIL-G-10924.
2. Turn rotor assembly shaft (4) by hand. Send pump back if it does not turn freely at a torque of less than 18 pound-inches.

GO TO FRAME 2

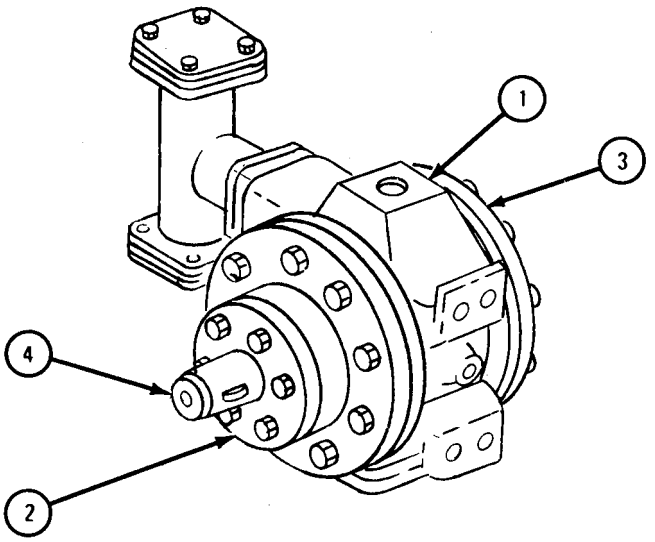

TA 105690

FRAME 2

1. Put pump (1) on hydraulic test stand, PN 3481 (2).
2. Connect intake hose (3) to pump inlet (4).
3. Connect discharge hose (5) to pump discharge (6).
4. Connect rotor assembly shaft (7) to flexible coupling (8).
5. Take out pipe plug and put pressure gage (9) in pipe plug hole (10).

GO TO FRAME 3

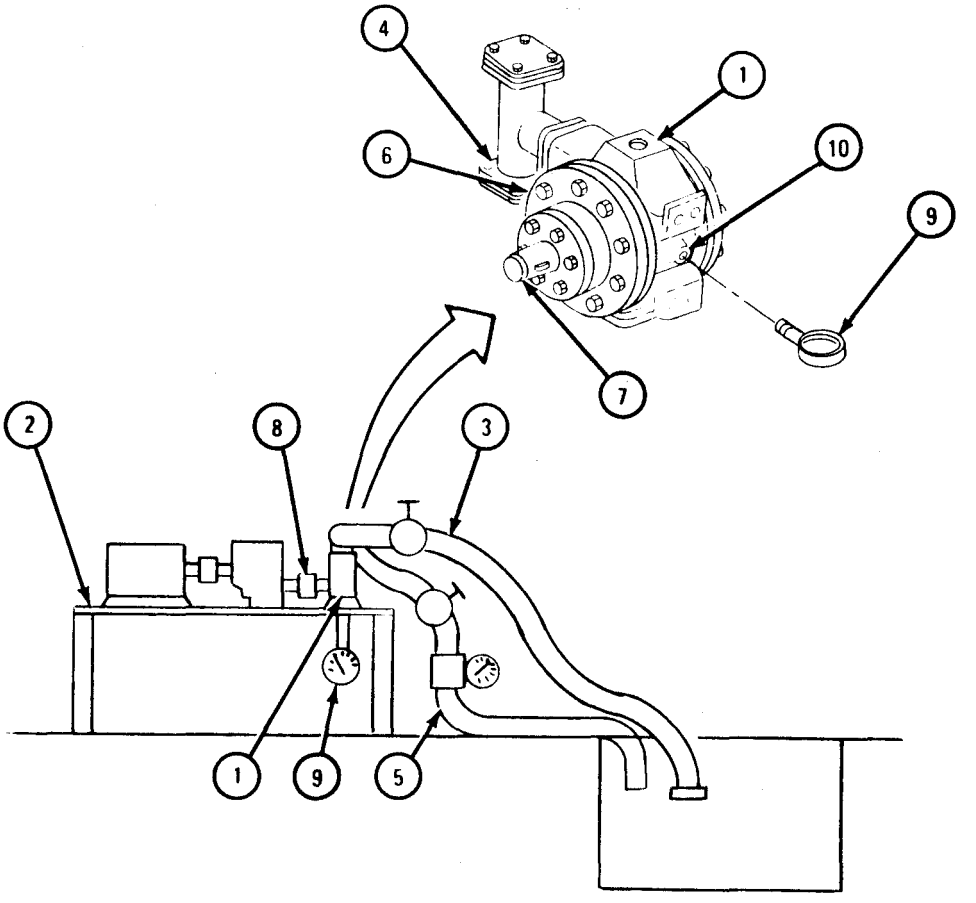

TA 105691

FRAME 3

1. Fill tank (1) with test fluid ESR-34C.
2. Close intake port gate valve (2) and discharge port gate valve (3).
3. Turn on motor (4) and run at 540 RPM. Check dry vacuum pressure.
4. Send back pump (5) if dry vacuum pressure is lower than 10.5 in. Hg (5.15 psi). Record dry vacuum pressure .
5. Turn off motor (4).

GO TO FRAME 4

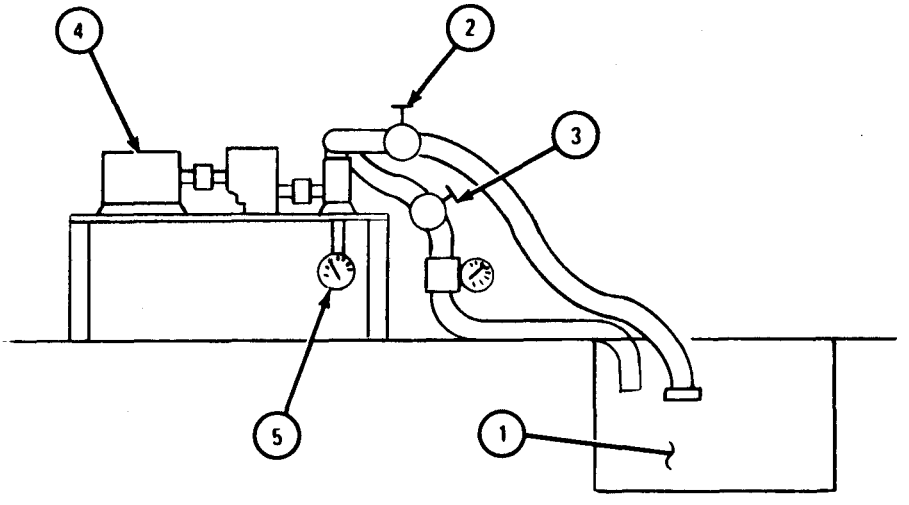

TA 105692

FRAME 4

1. Open intake gate valve (1) and outlet gate valve (2).
2. Turn on motor (3) and run at 540 RPM. Adjust valve setscrew on discharge part of pump (4) until pressure gage (5) reads 45 psi.
3. Turn down motor speed until pressure at gage (5) is 40 psi.
4. Read flow on flow meter (6). Send back pump if flow is less than 52 GPM.
5. Listen to pump while it is running. Send back pump if vane hoist is too high.

GO TO FRAME 5

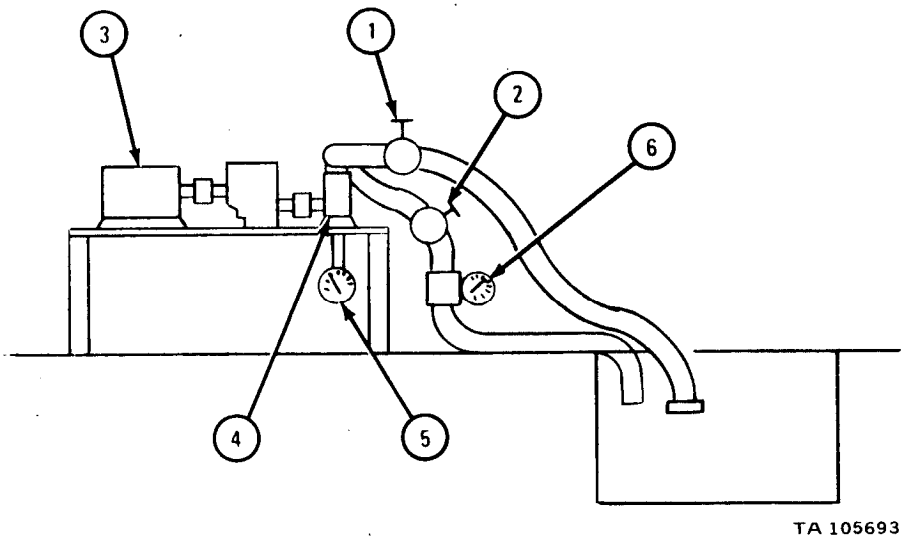

FRAME 5

1. Turn off motor (1). Shut intake gate valve (2) and outlet gate valve (3). Close valve setscrew on discharge part of pump (4) .
2. Turn on motor (1) and open intake gate valve (2) until pressure on gage (5) is greater than 70 psi. Record pressure.
3. Close valve (2) and turn off motor (1). Hold pressure for at least 1-minute and check pump for leakage.
4. Send back pump if it leaks.
5. Open outlet gate valve (3). Turn on motor (1).
6. Run for 2-minutes to drain test fluid from pump (4).
7. Turn off motor (1) and close outlet gate valve (3).
8. Read just valve setscrew to 45 psi. (Refer to frame 4).

GO TO FRAME 6

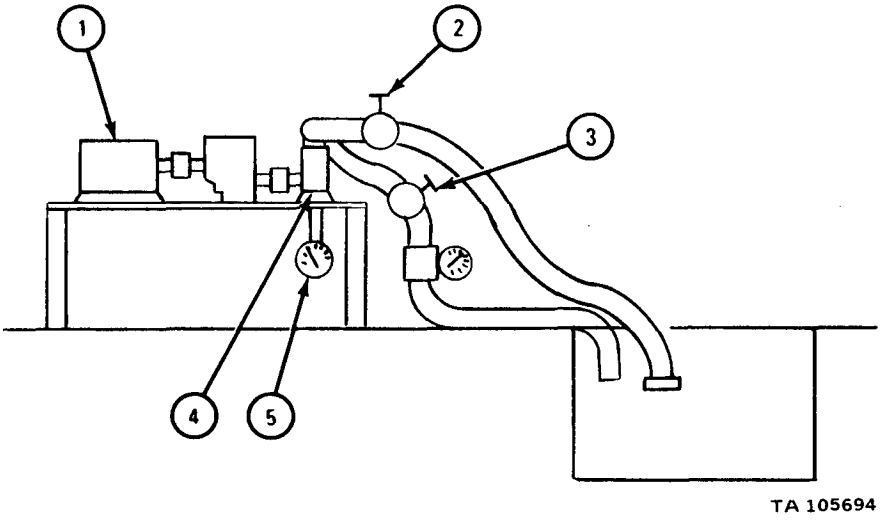

FRAME 6

1. Take off pressure gage (1) and put on pipe plug (2).
2. Take flexible coupling (3) off rotor assembly shaft (4).
3. Take discharge hose (5) off pump discharge (6).
4. Take intake hose (7) off pump inlet (8).
5. Take pump (9) off hydraulic test stand (10).

GO TO FRAME 7

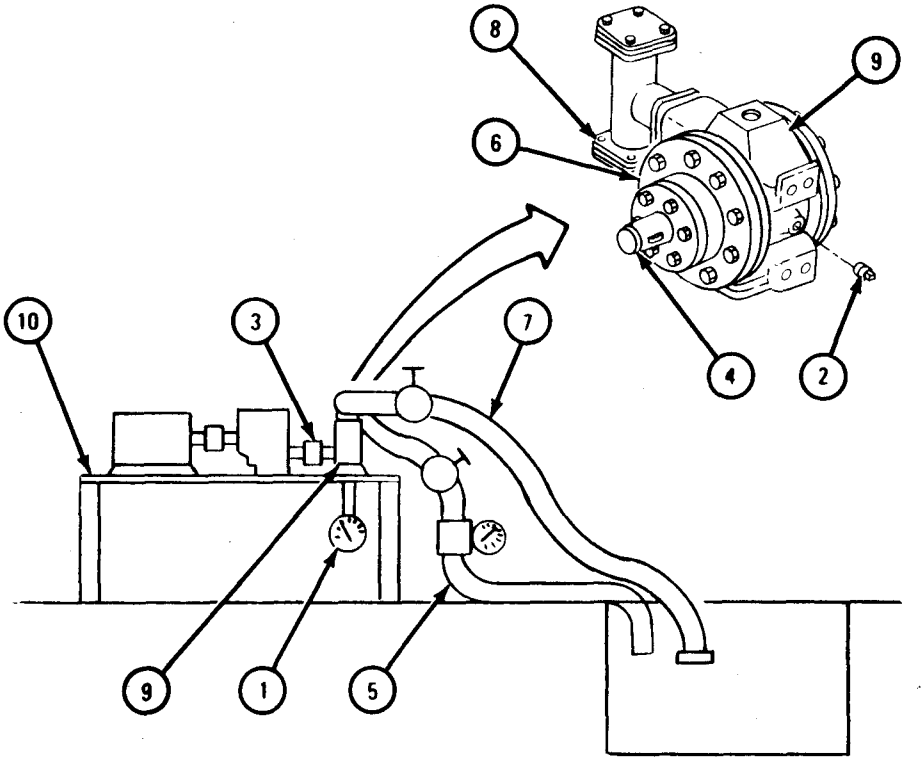

TA 105695

FRAME 7

1. Turn rotor assembly shaft (1) by hand. Send back pump (2) if it does not turn freely at a torque of less than 18 pound - inches.
2. Lubricate pump (2) at inboard bearing cover (3) and out board bearing cover (4) with grease specification MIL-G-10924.

NOTE

Follow-on Maintenance Action Required:

Replace centrifugal pump on truck. Refer to TM 9-2320-209-20.

END OF TASK

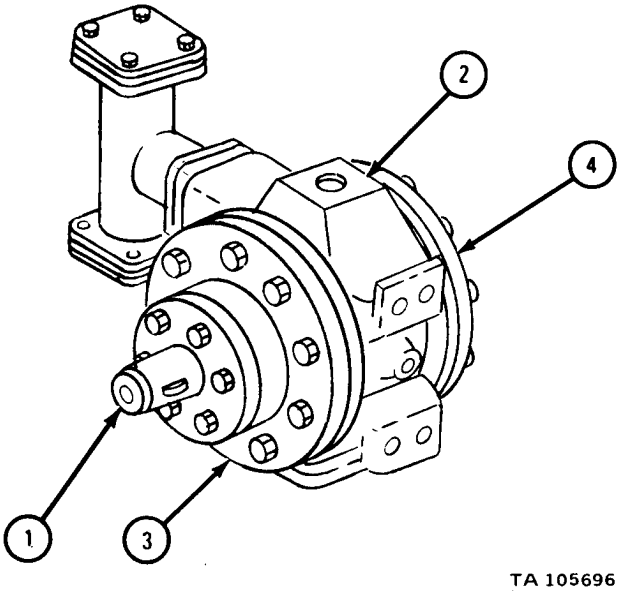

TA 105696

17-27. FUEL TANK BODY REMOVAL, REPAIR, AND REPLACEMENT (TRUCK M49A1C) .

TOOLS : No special tools required

SUPPLIES : Manhole cover gasket (3)

PERSONNEL: Two

EQUIPMENT CONDITION: Truck parked, engine off, handbrake set.

WARNING

Smoking, sparks or open flame are not allowed within 50 feet of fuel truck during this task. Make sure that fuel tank truck is statically grounded before starting to work and during all operations. Fuel and fuel fumes can catch fire and explode, causing injury to personnel and damage to equipment.

a. Preliminary Procedures.

(1) Drain all fuel from holding compartments. Refer to TM 9-2320-209-10.

(2) Clean fuel tank truck exterior. Refer to TM 9-247.

(3) Remove pioneer tool bracket. Refer to para 17-59.

(4) Remove splash shields. Refer to para 17-69.

(5) Remove front propeller shaft. Refer to Propeller Shaft and Universal Joint Removal and Replacement, TM 9-2320-209-20.

(6) Remove intermediate propeller shaft. Refer to Propeller Shaft and Universal Joint Removal and Replacement, TM 9-2320-209-20.

(7) Remove rear propeller shaft. Refer to Propeller Shaft and Universal Joint Removal and Replacement, TM 9-2320-209-20.

(8) Disconnect chassis wiring harness. Refer to Part 1, para 7-6.

(9) Remove water segregator tank. Refer to TM 9-2320-209-20.

b. Removal.

FRAME 1

Soldier A	1.	Hold screw (1).
Soldier B	2.	Take off nut (2) and washer (3).
Soldier A	3.	Take out screw (1).
Soldier B	4.	Take off clamp ring (4).
Soldier A	5.	Take off manhole cover (5).
Soldier B	6.	Take off gasket (6). Throw away gasket.
Soldiers A and B	7.	Do steps 1 through 6 again for two other manhole covers (5).

GO TO FRAME 2

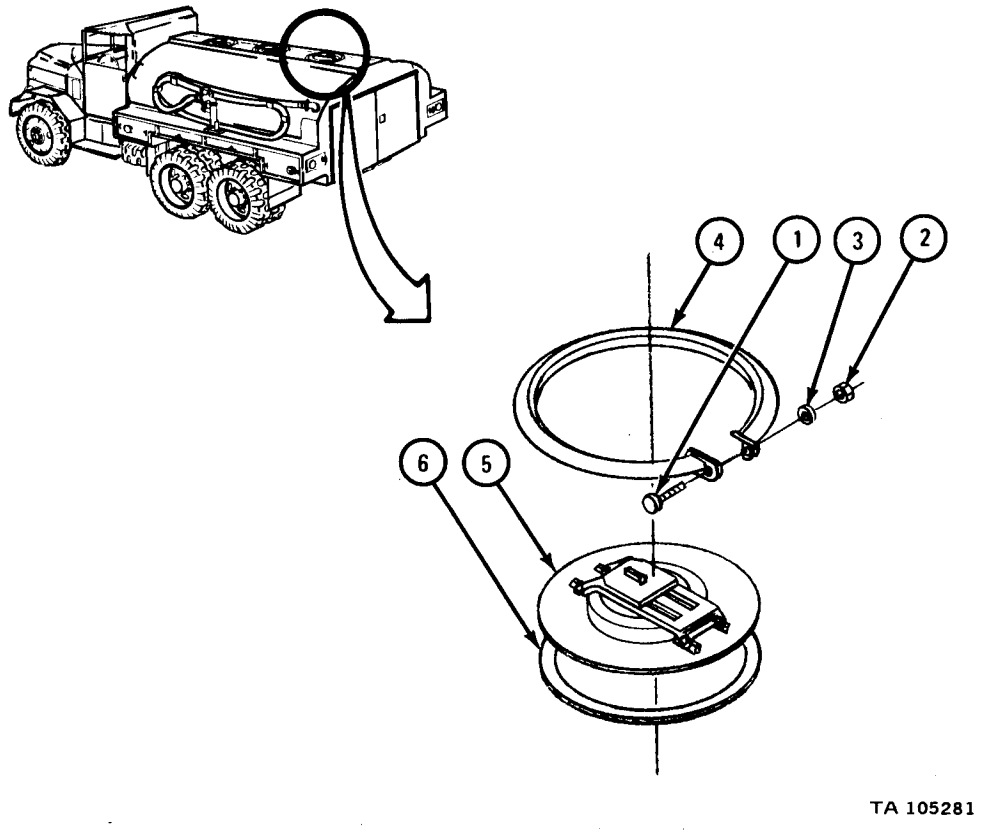

FRAME 2

Soldier A 1. Hold nut (1).

Soldier B 2. Unscrew coupling nut (2).

Soldier A 3. Take out nozzle (3).

Soldiers A and B 4. Take off discharge hose (4).

Soldier A 5. Hold two nuts (5).

Soldier B 6. Take out two screws(6).

7. Take off nozzle bracket (7).

GO TO FRAME 3

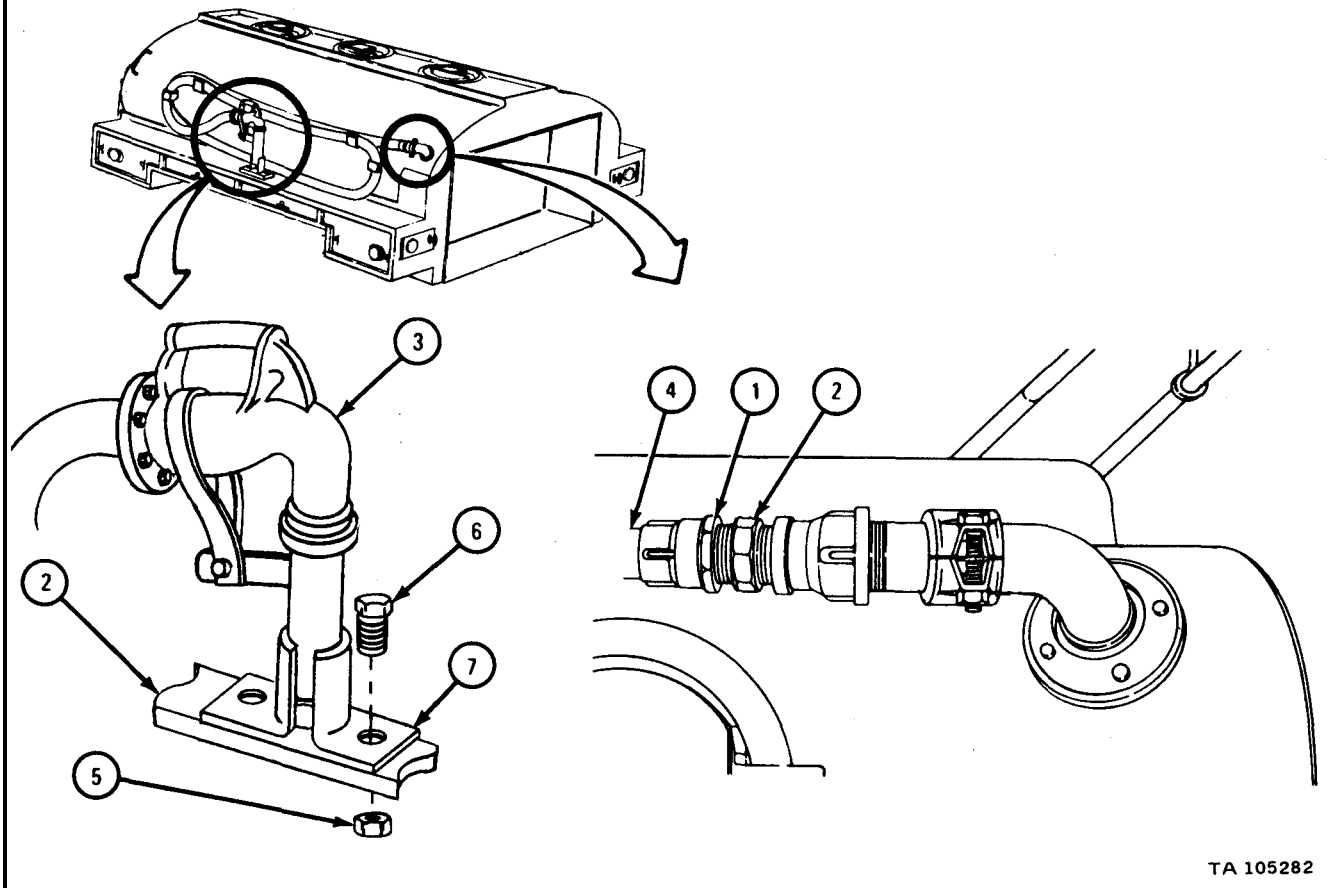

FRAME 3

Soldier A	1.	File off staking on hinge pin (1) at points (2).
	2.	Drive out hinge pin (1).
Soldier B	3.	Take off hose compartment door (3).
Soldiers A and B	4.	Do steps 1, 2, and 3 again for other hose compartment door (3).
Soldier A	5.	Hold two nuts (4).
Soldier B	6.	Take out two screws (5).
	7.	Take off reflector (6).
Soldiers A and B	8.	Do steps 5, 6, and 7 again for five other reflectors (6).
	9.	Take off fire extinguisher (7). Take off two capscrews (8) and bracket (9).

GO TO FRAME 4

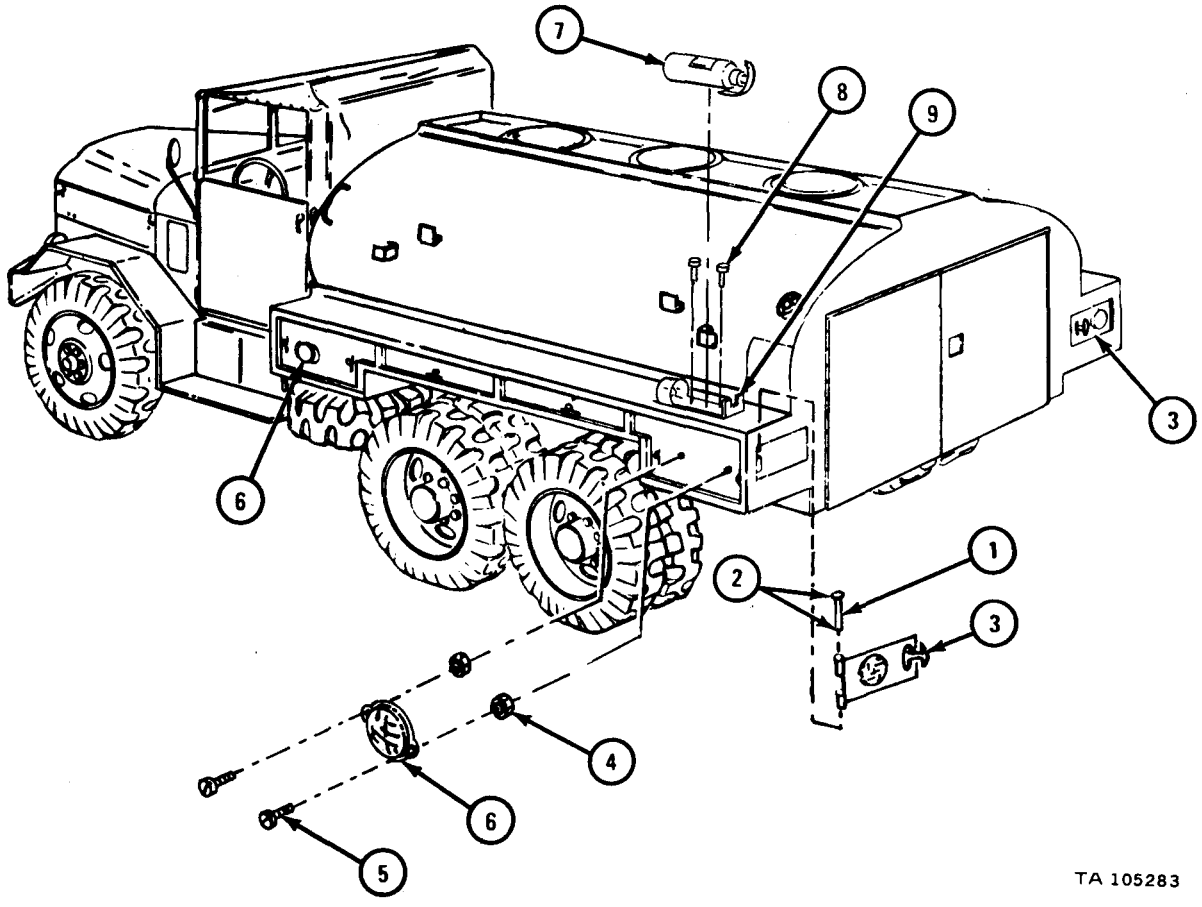

FRAME 4

Soldier A 1.	Take out two screws (1).
Soldier B 2.	Take off hose compartment front cover plate (2).
Soldiers A and B 3.	Do steps 1 and 2 again for other hose compartment front cover plate (2).
Soldier A 4.	Hold two nuts (3).
Soldier B 5.	Take out two screws (4).
6.	Take off lashing hook (5).
Soldiers A and B 7.	Do steps 4, 5, and 6 again for 11 other lashing hooks (5) .

GO TO FRAME 5

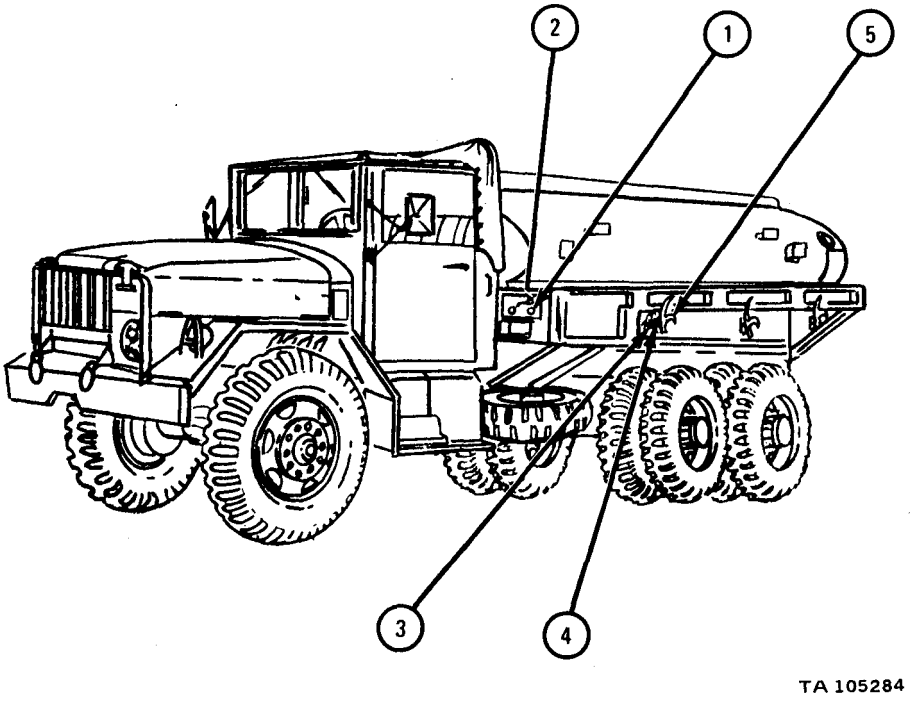

FRAME 5

Soldier A 1. Hold two nuts (1).

Soldier B 2. Take out two screws (2).

Soldier A 3. Hold 10 nuts (3).

Soldier B 4. Take out 10 screws (4).

Soldiers A and B 5. Take off pump compartment door (5).

6. Do steps 1 through 5 again for other pump compartment door.

GO TO FRAME 6

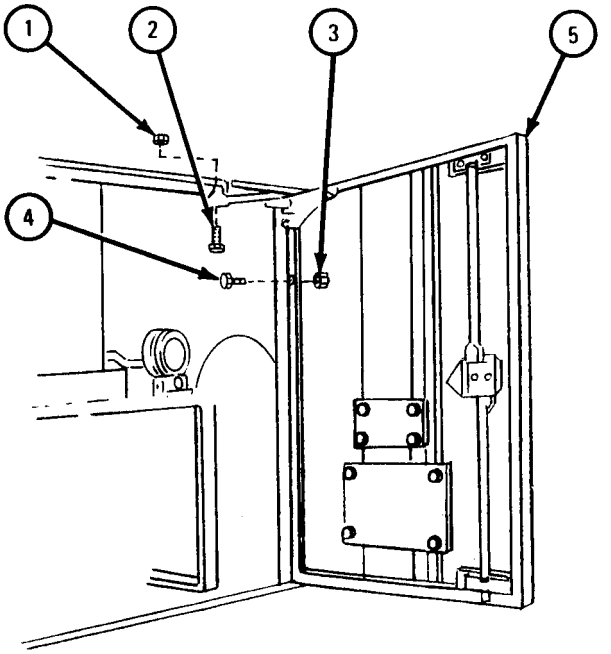

TA 105285

FRAME 6

Soldier A 1. Hold two nuts (1).

Soldier B 2. Take out two screws (2).

3. Take out static reel (3) .

GO TO FRAME 7

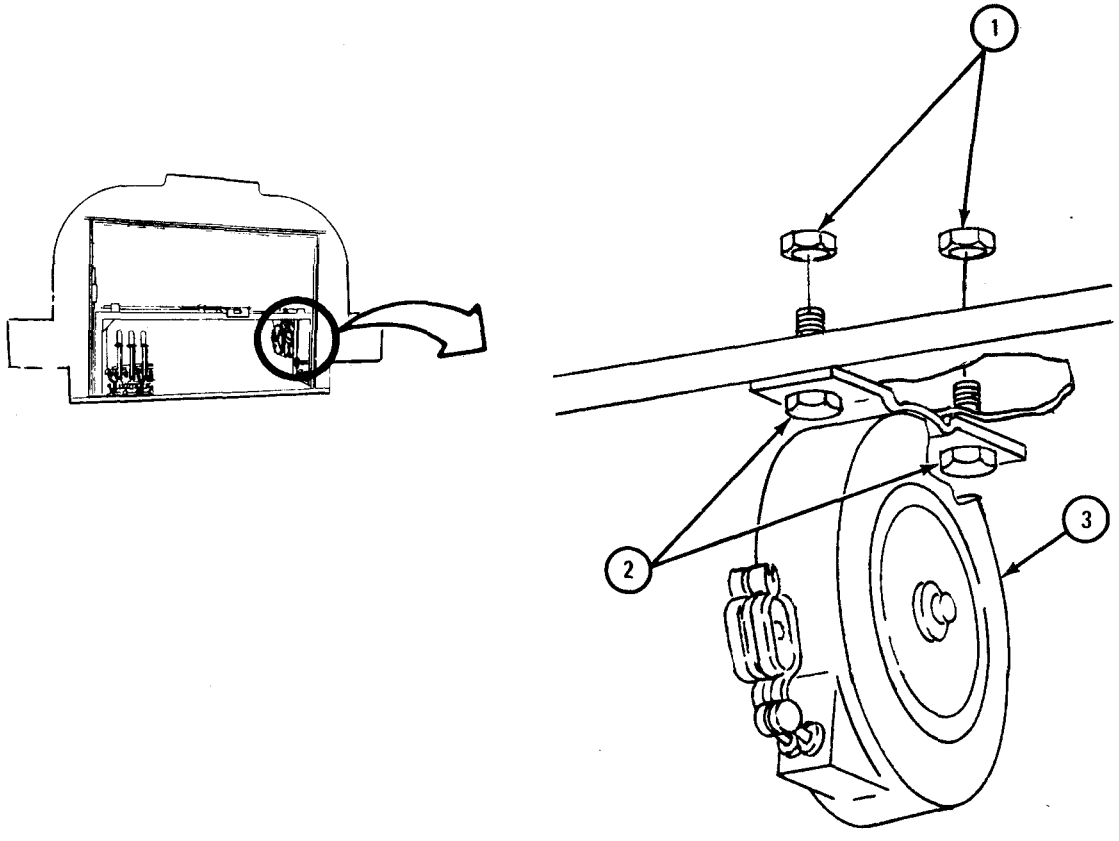

FRAME 7

1. Take out two pipes (1).
2. Take out two valves (2).
3. Take out two pipes (3).

GO TO FRAME 8

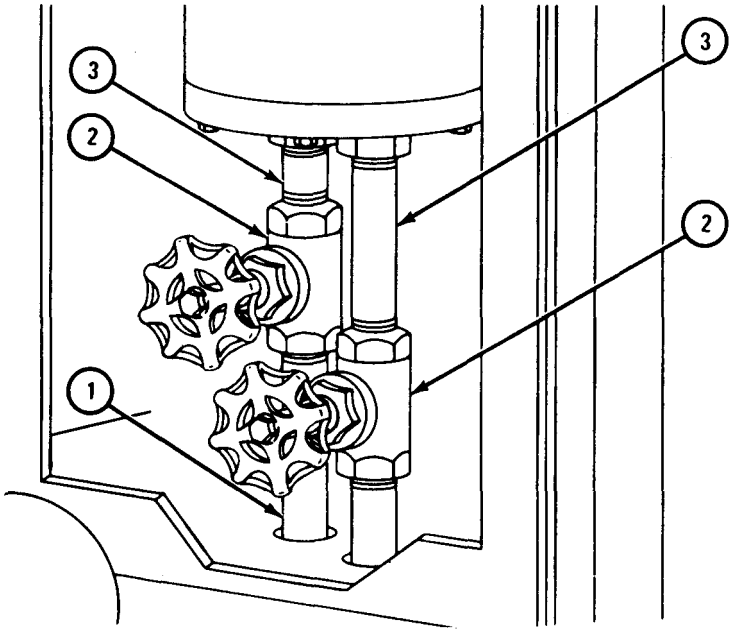

TA 105287

FRAME 8

Soldier A 1. Hold two nuts (1).

Soldier B 2. Take out two screws (2).

3. Take off two halves of clamp (3), gasket (4), and pipe (5).

Soldier A 4. Hold nut (6).

Soldier B 5. Take out screw (7).

GO TO FRAME 9

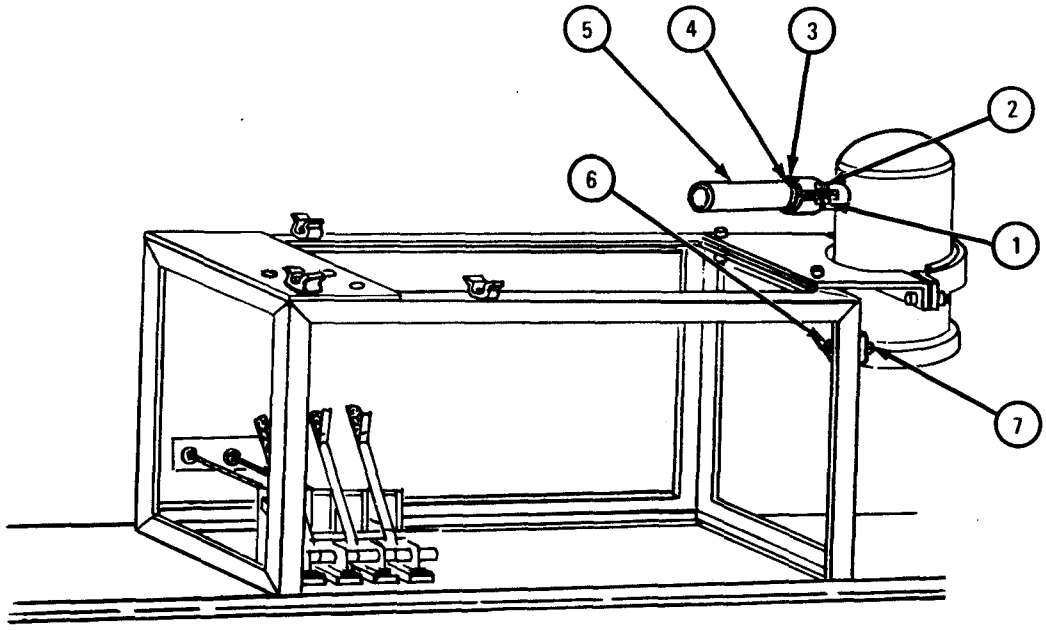

TA 105288

FRAME 9

Soldier A 1. Hold sump assembly (1).

Soldier B 2. Take off two nuts (2).

3. Take out two screws (3).

Soldiers A and B 4. Take out sump assembly (1).

GO TO FRAME 10

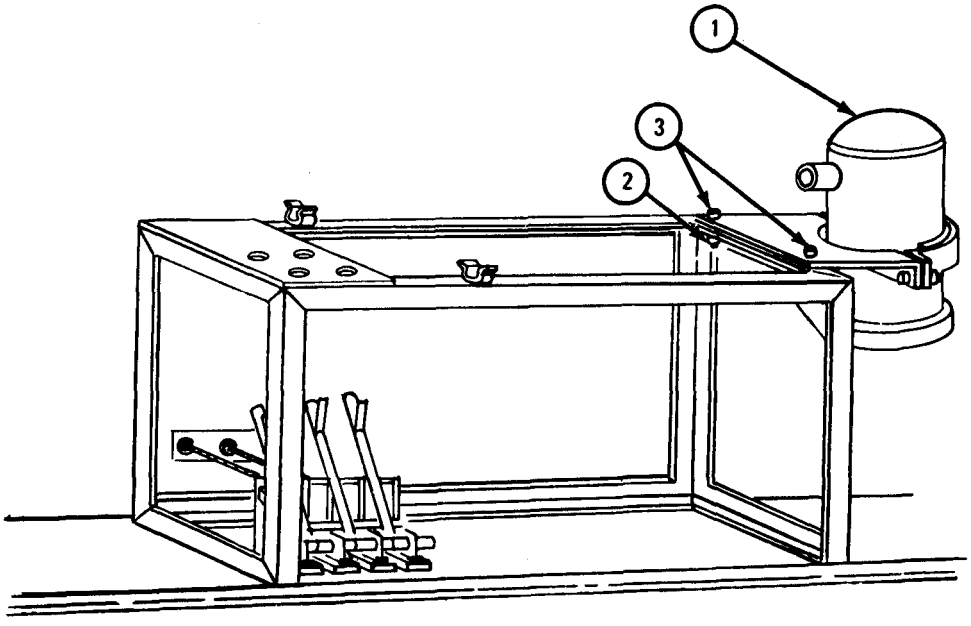

TA 105289

FRAME 10

Soldier A 1. Hold two nuts (1).

Soldier B 2. Take out two screws (2).

Soldier A 3. Hold four nuts (3).

Soldier B 4. Take out four screws (4) .

Soldiers A and B 5. Take out segregator stand (5).

GO TO FRAME 11

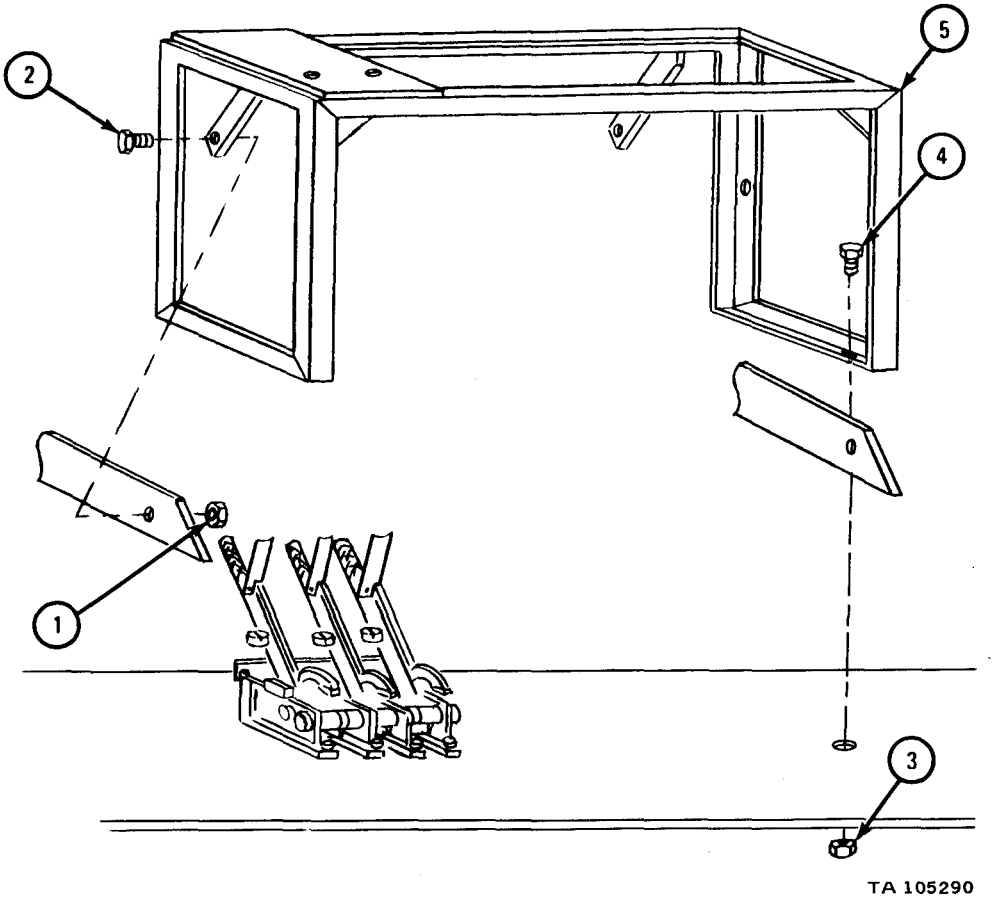

FRAME 11

Soldier A 1. Hold four nuts (1).

Soldier B 2. Take out four screws (2).

3. Take off outside meter outlet tube (3).

Soldier A 4. Take off inside meter outlet tube (4).

GO TO FRAME 12

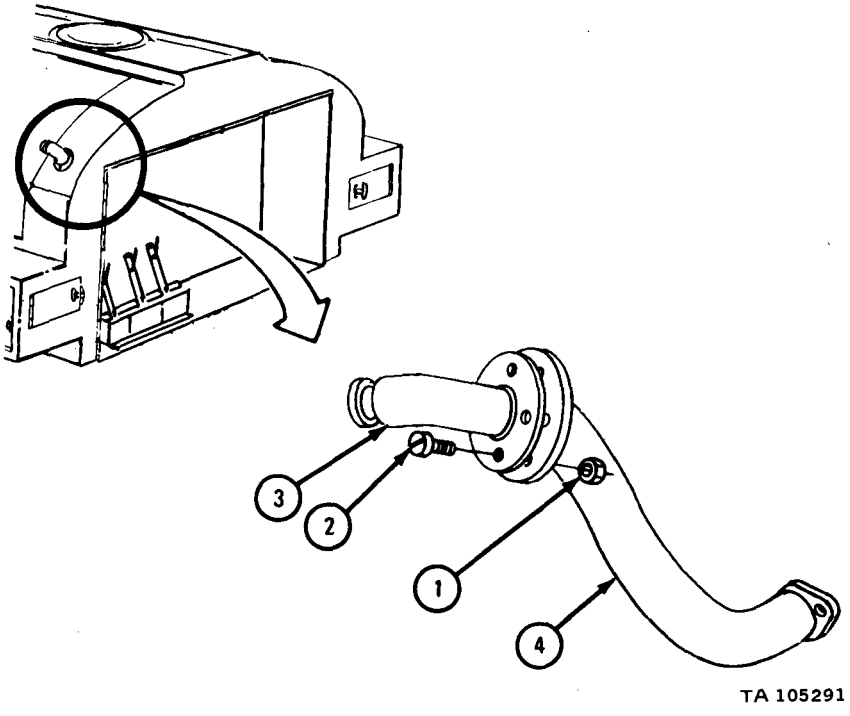

FRAME 12

WARNING

Always wear protective gloves when handling cable. Do not let cable slip through hands. Rusty or broken wires can cause injury to personnel.

Soldier A 1. Loosen nut (1).

2. Take out rear discharge cable (2).

Soldier B 3. Loosen two nuts (3).

4. Take out rear discharge cable (2). Pull rear discharge cable out of truck.

Soldiers A and B 5. Do steps 1 through 4 again for two other discharge cables.

GO TO FRAME 13

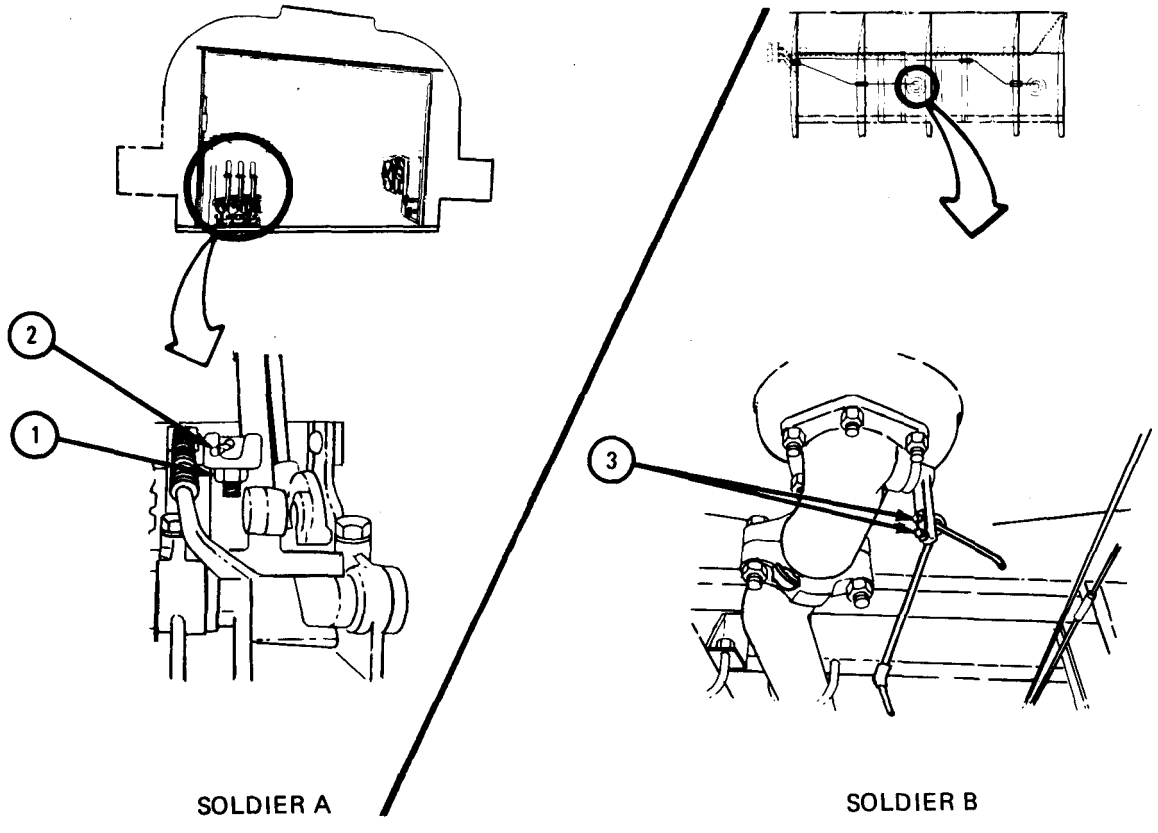

FRAME 13

Soldier A 1. Loosen nut (1).

2. Take out emergency release cable (2).

Soldier B 3. Pull emergency release cable (2) out of truck.

GO TO FRAME 14

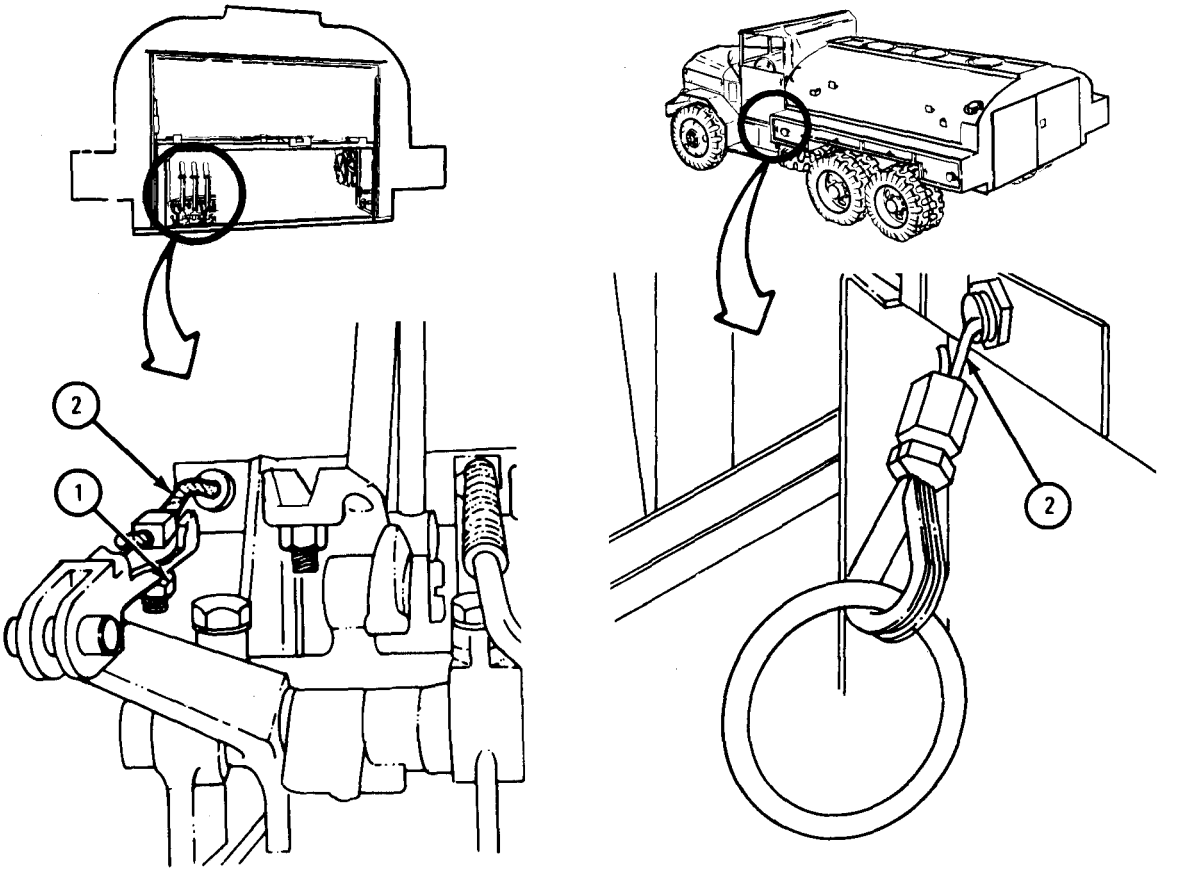

SOLDIER A

SOLDIER B

TA 105293

FRAME 14

Soldier A 1. Unscrew four nuts (1).

Soldier B 2. Hold four nuts (2).

Soldier A 3. Takeout three screws (3).

Soldier B 4. Hold four nuts (4).

Soldier A 5. Take out three screws (5).

6. Take out discharge valve controls (6).

GO TO FRAME 15

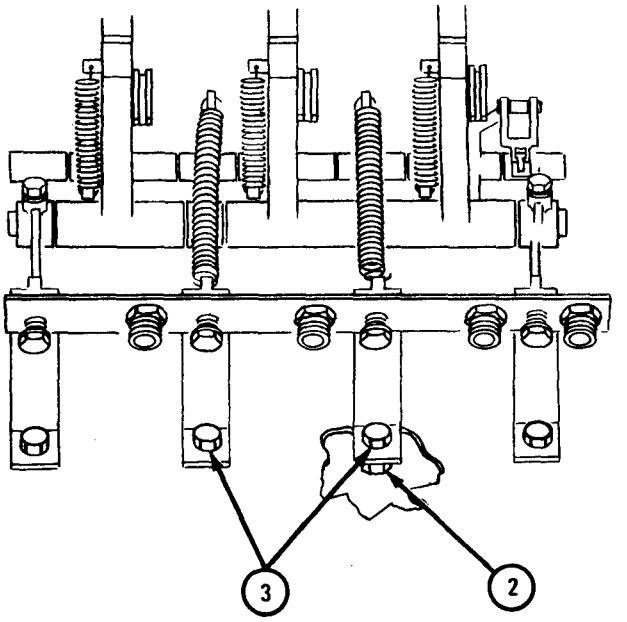

REAR VIEW

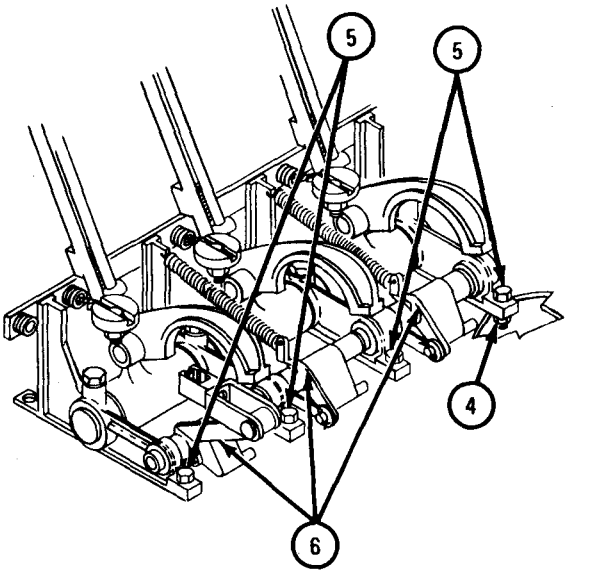

FRONT VIEW

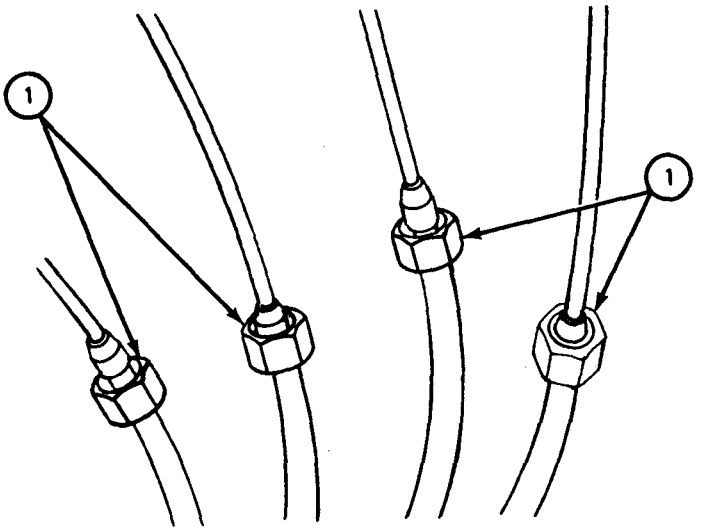

TA 105294

FRAME 15

Soldier A 1. Hold two screws (1).

Soldier B 2. Take off two nuts (2) and lower coupling part (3).

Soldier A 3. Take off two screws (1) and upper coupling part (4).

4. Take off and throw away gasket (5).

Soldiers A and B 5. Do steps 1 through 4 again for two other discharge valves (6).

GO TO FRAME 16

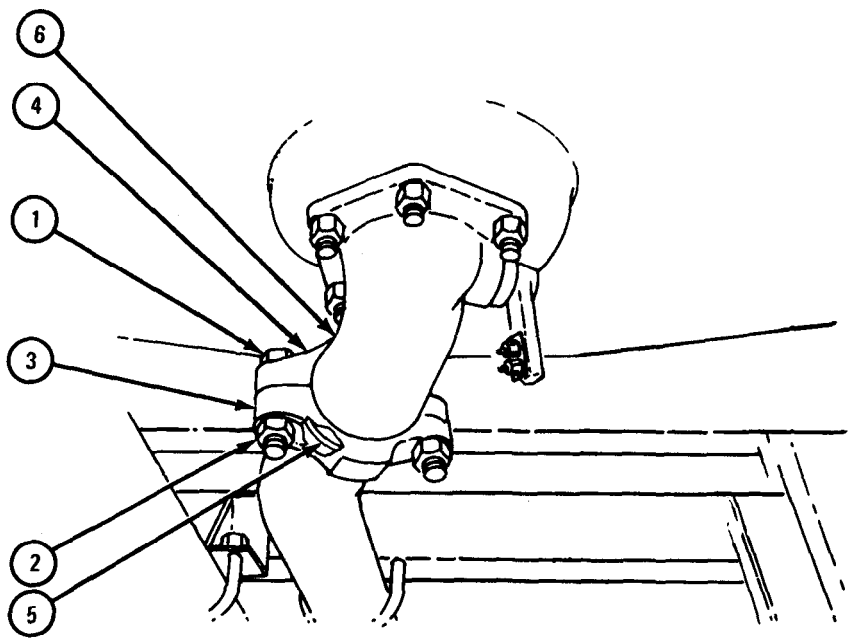

TA 105295

FRAME 16

Soldier A 1. Take off six nuts (1).

Soldier B 2. Take off discharge valve (2) and gasket (3).

Soldiers A and B 3. Do steps 1 and 2 again for two other discharge valves (2).

Soldier A 4. Take off two nuts (4).

5. Take out U-bolt (5).

6. Do steps 4 and 5 again for three other U-bolts (5).

7. Take out discharge tube (6) .

8. Do steps 4 through 7 again for two other discharge tubes (6).

GO TO FRAME 17

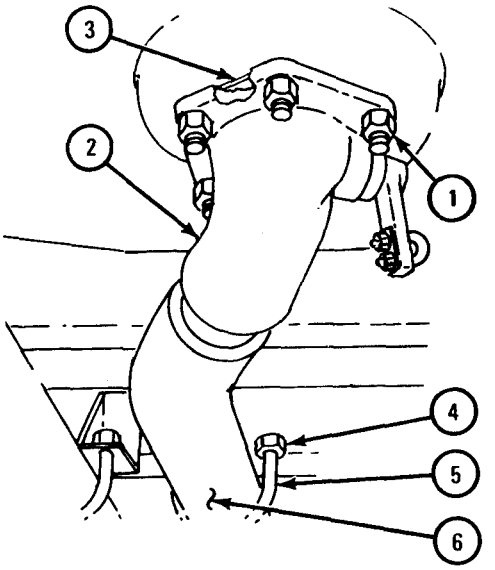

TA 105296

FRAME 17

1. Take off two nuts (1) and washers (2).
2. Take off two inner springs (3) and outer springs (4).
3. Take out two screws (5) and washers (6).
4. Take off nut (7).
5. Take out screw (8).
6. Do steps 4 and 5 again for two other side mounts (9).
7. Do steps 1 through 6 again for right side of truck.

GO TO FRAME 18

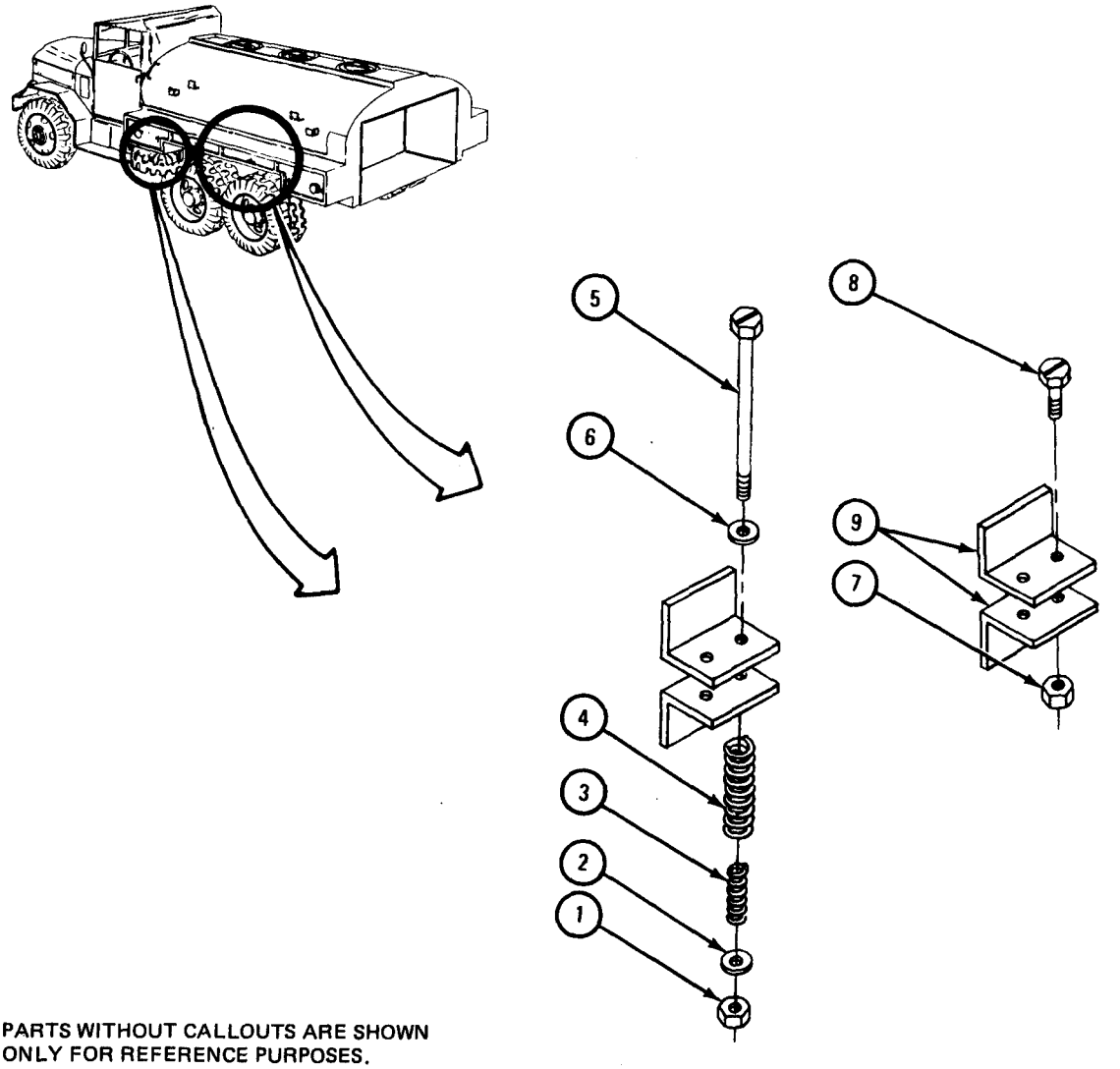

NOTE: PARTS WITHOUT CALLOUTS ARE SHOWN ONLY FOR REFERENCE PURPOSES.

TA 105297

FRAME 18

Soldiers A and B	1.	Put chain sling (1) around tank body (2) and hook chain sling on hoist.

NOTE

Wood blocks must be high and sturdy enough to work under tank body (2) .

Soldier A	2.	Guide tank body (2) off truck and onto wood blocks as soldier B lifts body.
Soldier B	3.	Using hoist, lift tank body (2) off truck and onto wood blocks.
Soldiers A and B	4.	Unhook chain sling (1) from tank body (2).

END OF TASK

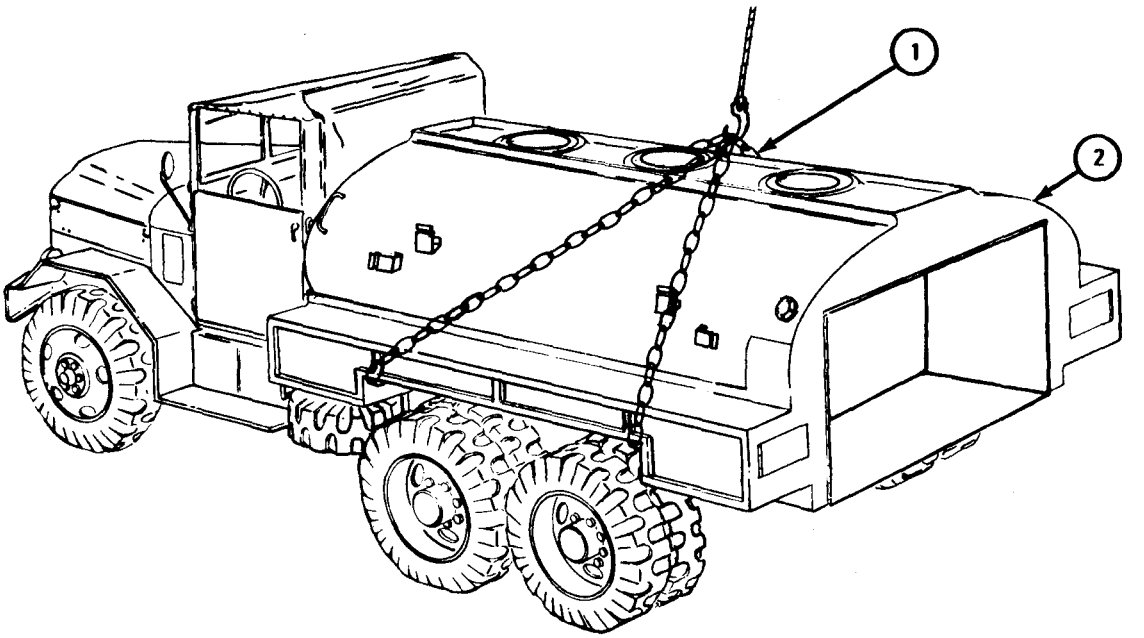

TA 105298

c. Cleaning. Refer to TB 43-0212 and TM 9-247.

d. Inspection and Repair. Refer to FM 43-2.

e. Replacement.

FRAME 1

Soldiers A and B	1. Put chain sling (1) around tank body (2) and hook chain sling on hoist.
Soldier A	2. Guide tank body (2) onto truck as soldier B lifts body.
Soldier B	3. Using hoist, lift tank body (2) onto truck as soldier A guides it.
Soldiers A and B	4. Unhook chain sling (1) from tank body (2).

GO TO FRAME 2

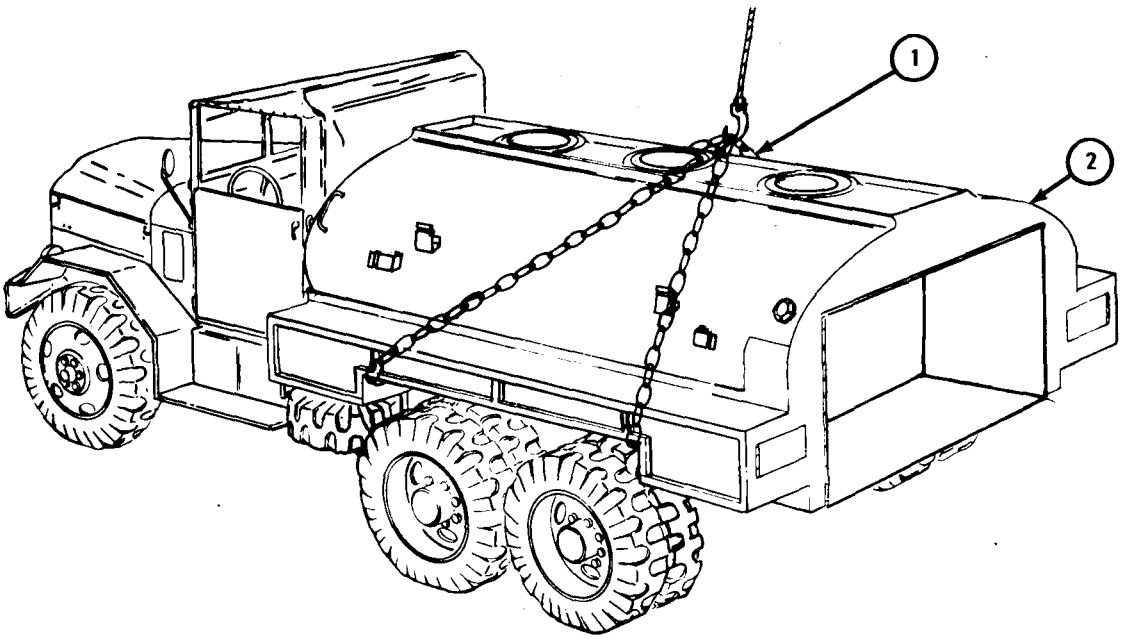

TA 105298

FRAME 2

1. Put in screw (1) with washer (2).
2. Put on two springs (3).
3. Put on washer (4) and nut (5).
4. Put in screw (6).
5. Put on nut (7).
6. Do steps 4 and 5 again for two other side mounts (8).
7. Do steps 1 through 6 again on right side of truck.

GO TO FRAME 3

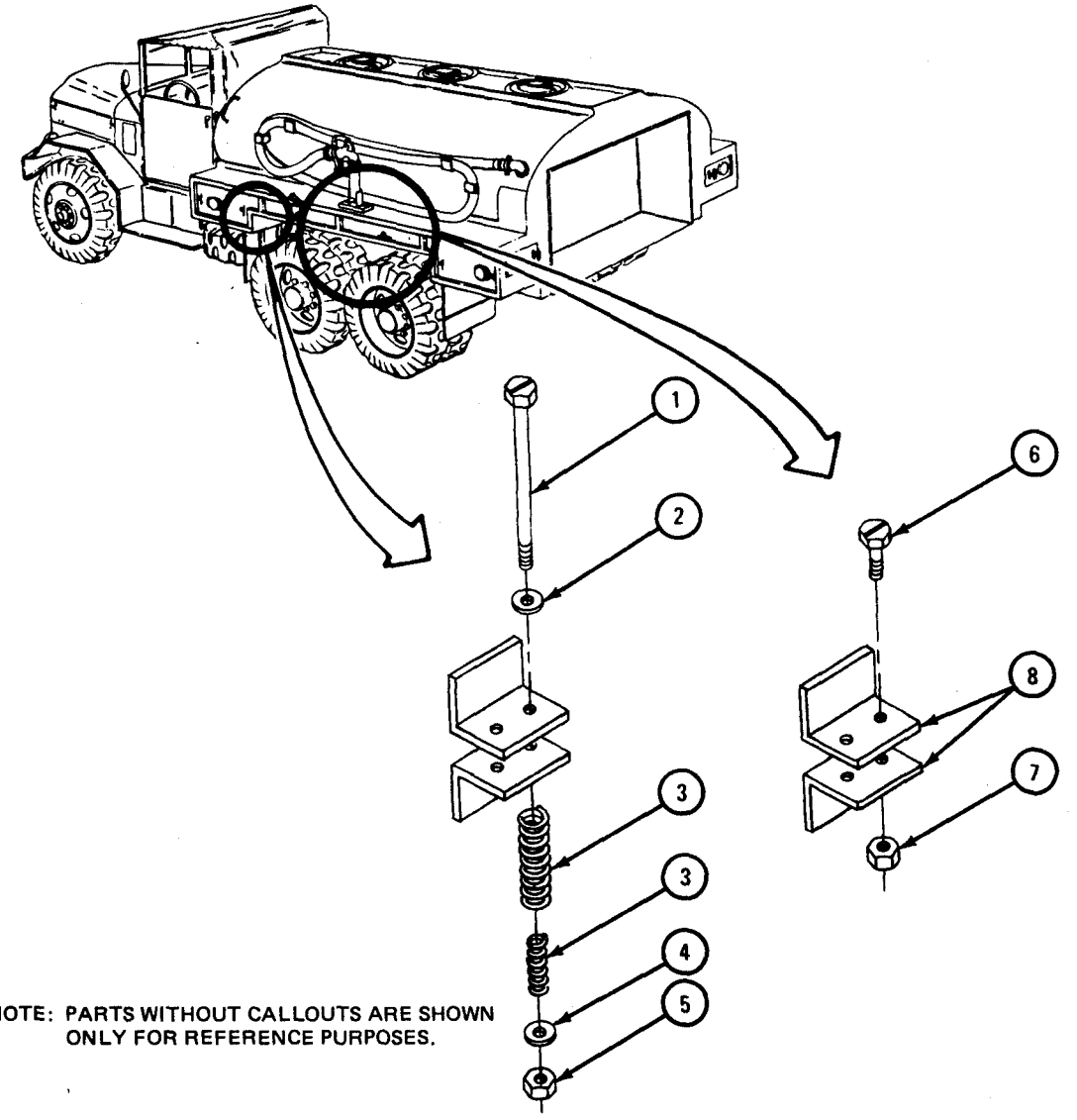

FRAME 3

Soldier A 1. Put on gasket (1).

Soldier B 2. Put on manhole cover (2).

Soldier A 3. Put on clamp ring (3).

4. Put in screw (4) and hold screw.

Soldier B 5. Put on washer (5) and nut (6).

Soldiers A and B 6. Do steps 1 through 5 again for two other manhole covers (2).

GO TO FRAME 4

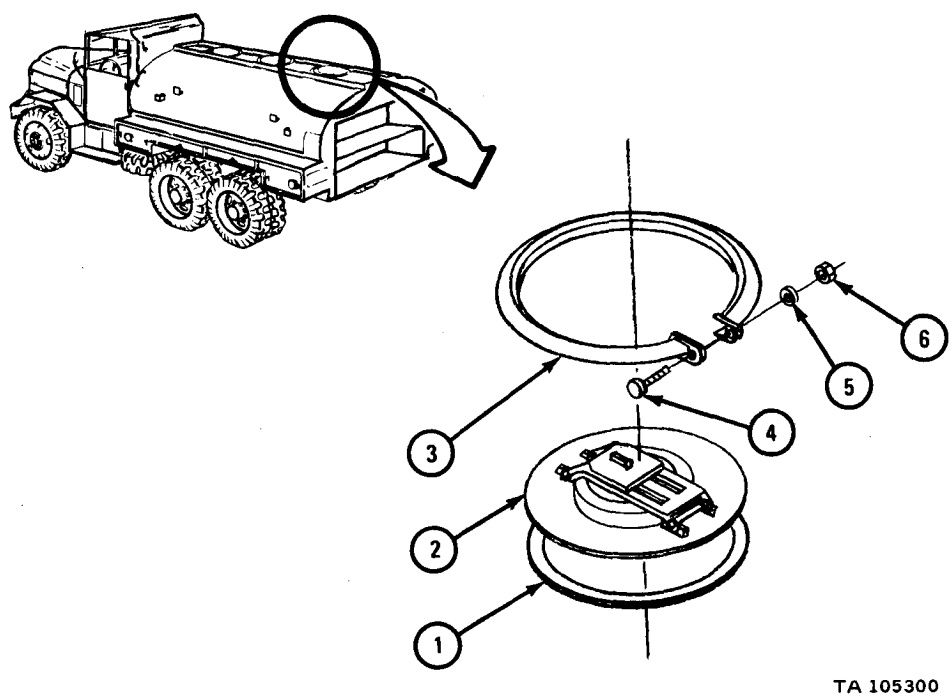

FRAME 4

Soldier A	1.	Aline screw holes of hose compartment front cover plate (1) with screw holes in tank body (2).
Soldier B	2.	Put in two screws (3).
Soldiers A and B	3.	Do steps 1 and 2 again for other hose compartment front cover plate (1).
Soldier A	4.	Aline screw holes of lashing hook (4) with screw holes in tank body (2) and put in two screws (5). Hold two screws.
Soldier B	5.	Put on two nuts (6).
Soldiers A and B	6.	Do steps 4 and 5 again for other 11 lashing hooks (4).

GO TO FRAME 5

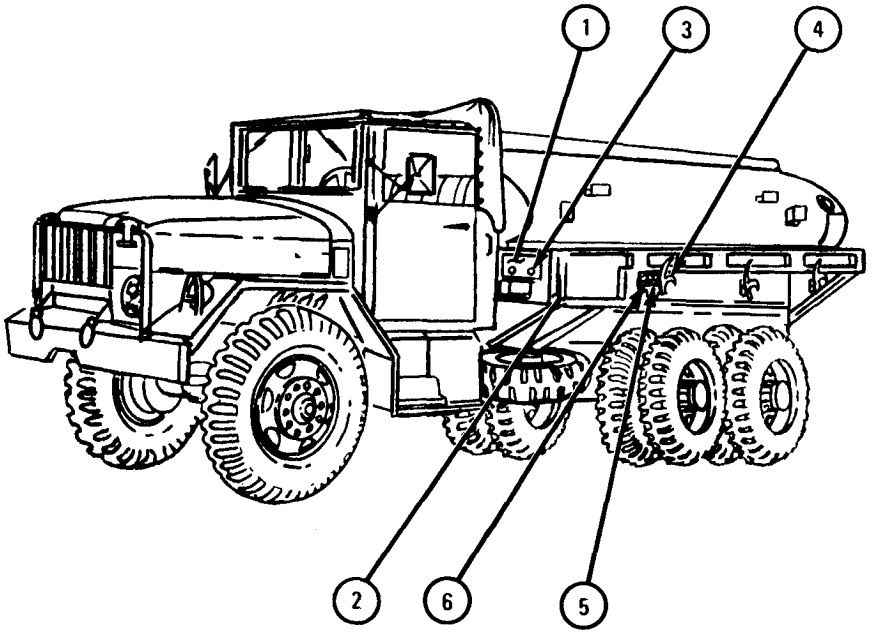

TA 105642

FRAME 5

Soldier A 1.	Aline screw holes of reflector (1) with screw holes in tank body (2) and put in two screws (3). Hold two screws.
Soldier B 2.	Put on two nuts (4).
Soldiers A and B 3.	Do steps 1 and 2 again for five other reflectors (1).
Soldier A 4.	Aline holes in hinge of hose compartment door (5) with holes in hinge on tank body (2) and put in hinge pin (6).
Soldier B 5.	Stake hinge pin (6) at both ends.
Soldiers A and B 6.	Do steps 4 and 5 again for other hose compartment door (5).
7.	Put bracket (7) in place and put in two screws (8).
8.	Put in fire extinguisher (9).

GO TO FRAME 6

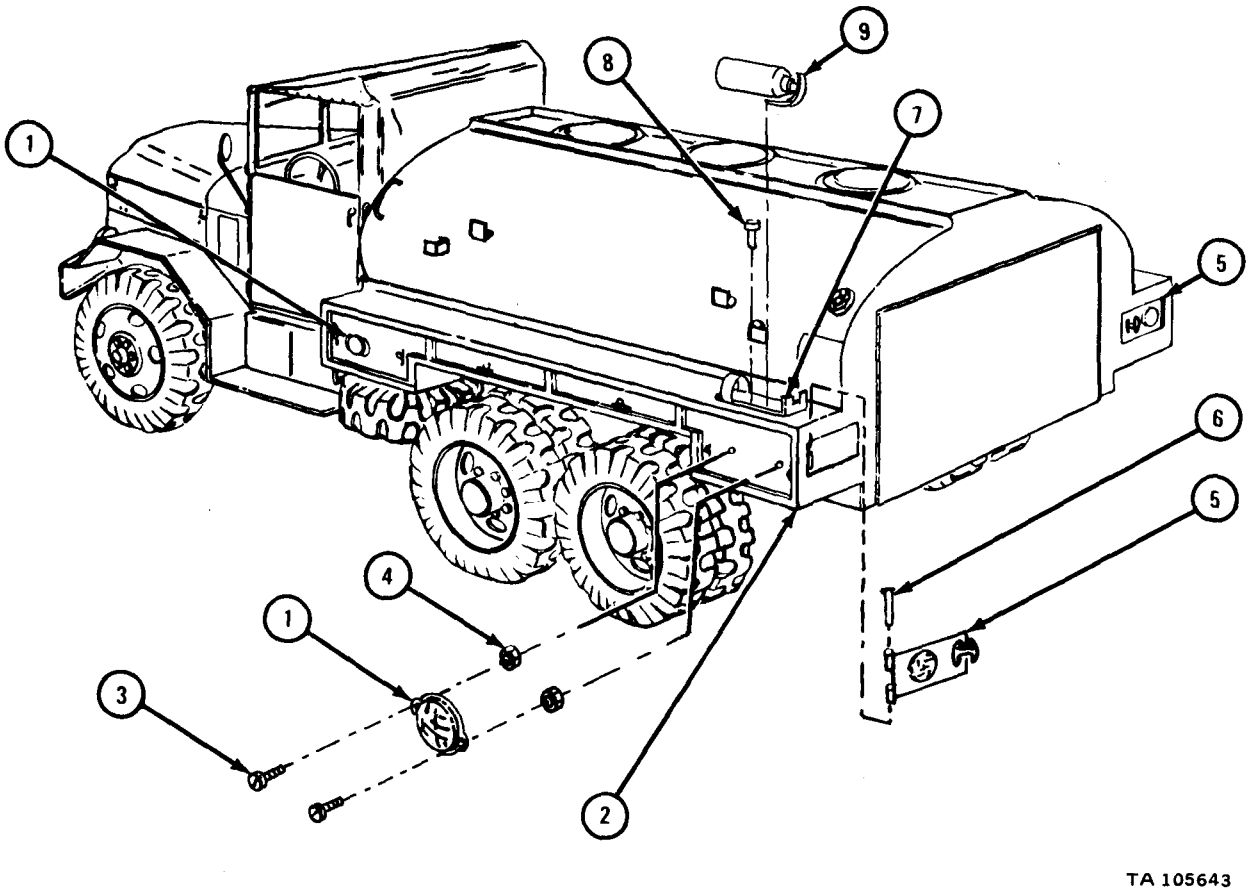

FRAME 6

Soldier A 1. Aline screw holes in outside meter outlet tube (1) with screw holes in tank body (2) and put in four screws (3). Hold four screws.

Soldier B 2. Put inside meter outlet tube (4) over four screws (3) and put on four nuts (5).

GO TO FRAME 7

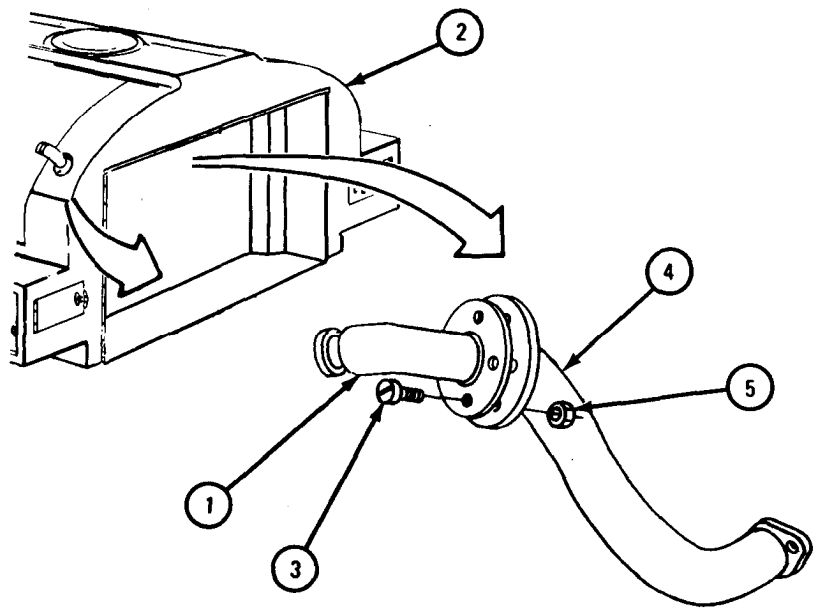

TA 105644

FRAME 7

Soldier A 1. Aline screw holes in nozzle bracket (1) with screw holes in tank body (2) and put in two screws (3). Hold two screws.

Soldier B 2. Put on two nuts (4).

Soldier A 3. Aline hose (5) to tube (6).

Soldier B 4. Screw on coupling nut (7).

Soldier A 5. Put nozzle (8) into nozzle bracket (1).

GO TO FRAME 8

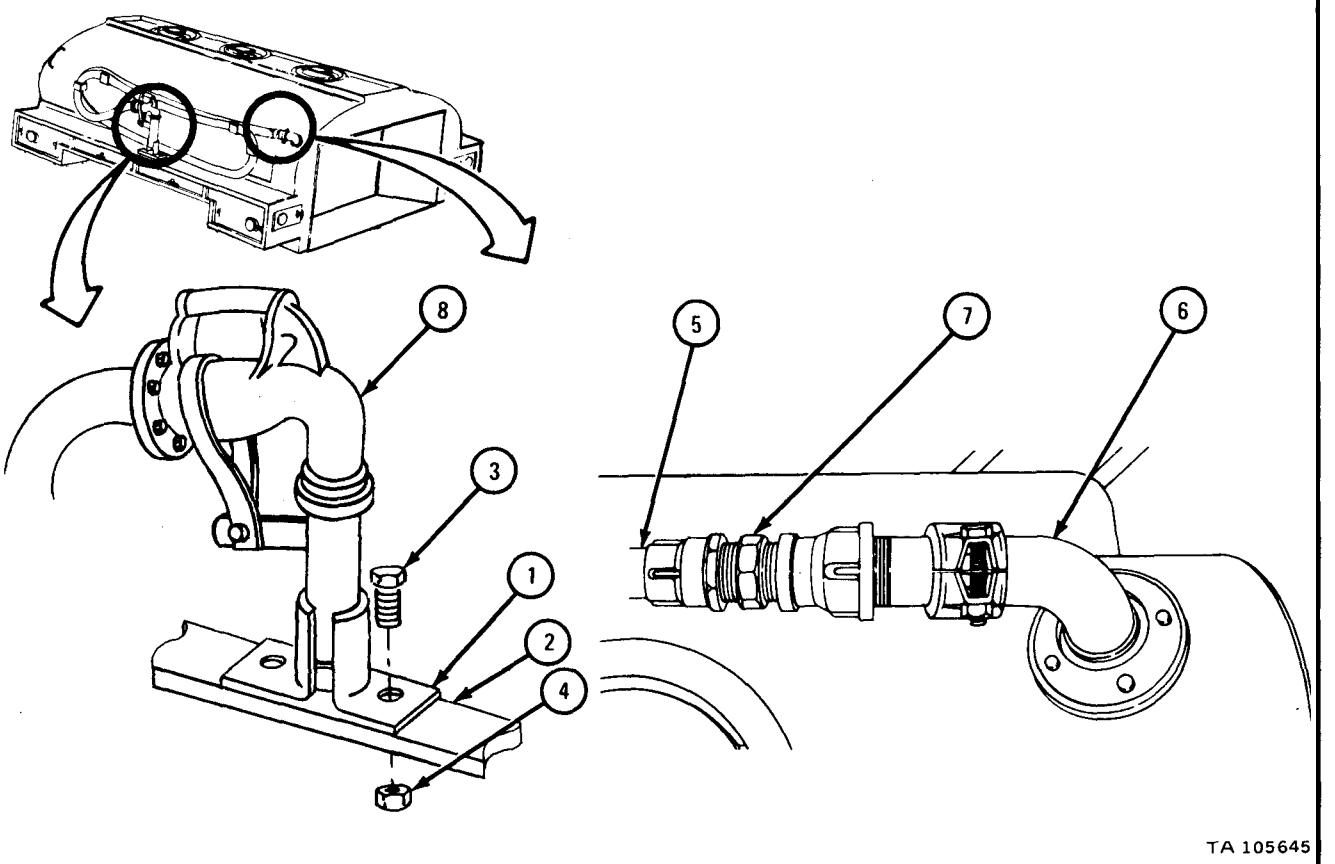

FRAME 8

Soldiers A and B 1. Put discharge tube (1) in place.

Soldier A 2. Hold discharge tube (1) in place.

Soldier B 3. Put in U-bolt (2) and put on two nuts (3).

4. Do step 3 again for three other U-bolts (2).

Soldiers A and B 5. Do steps 1 through 4 again for two other discharge tubes (1).

GO TO FRAME 9

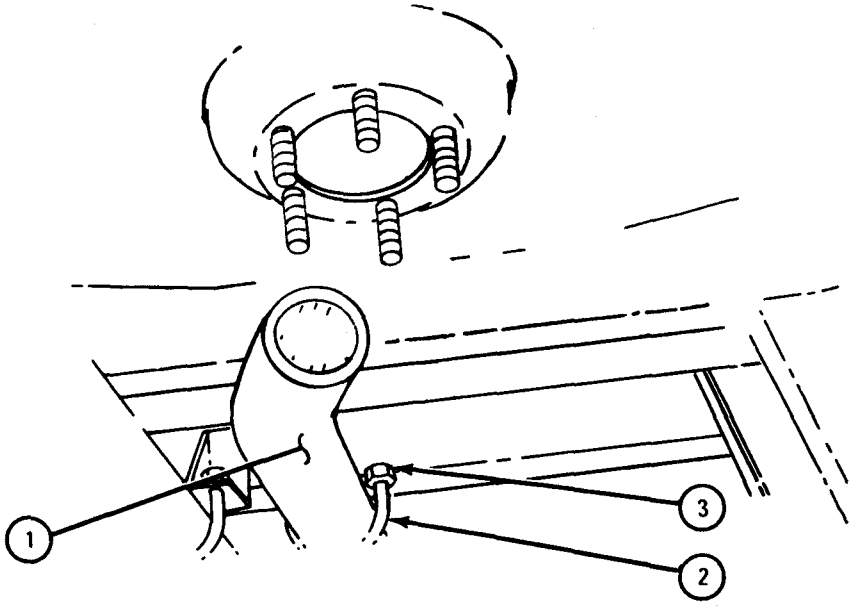

TA 105646

FRAME 9

Soldier A 1. Put in segregator stand (1).

Soldier B 2. put in four screws (2). Hold screws.

Soldier A 3. Put on four nuts (3).

Soldier B 4. Put in two screws (4). Hold screws.

Soldier A 5. Put on two nuts (5).

GO TO FRAME 10

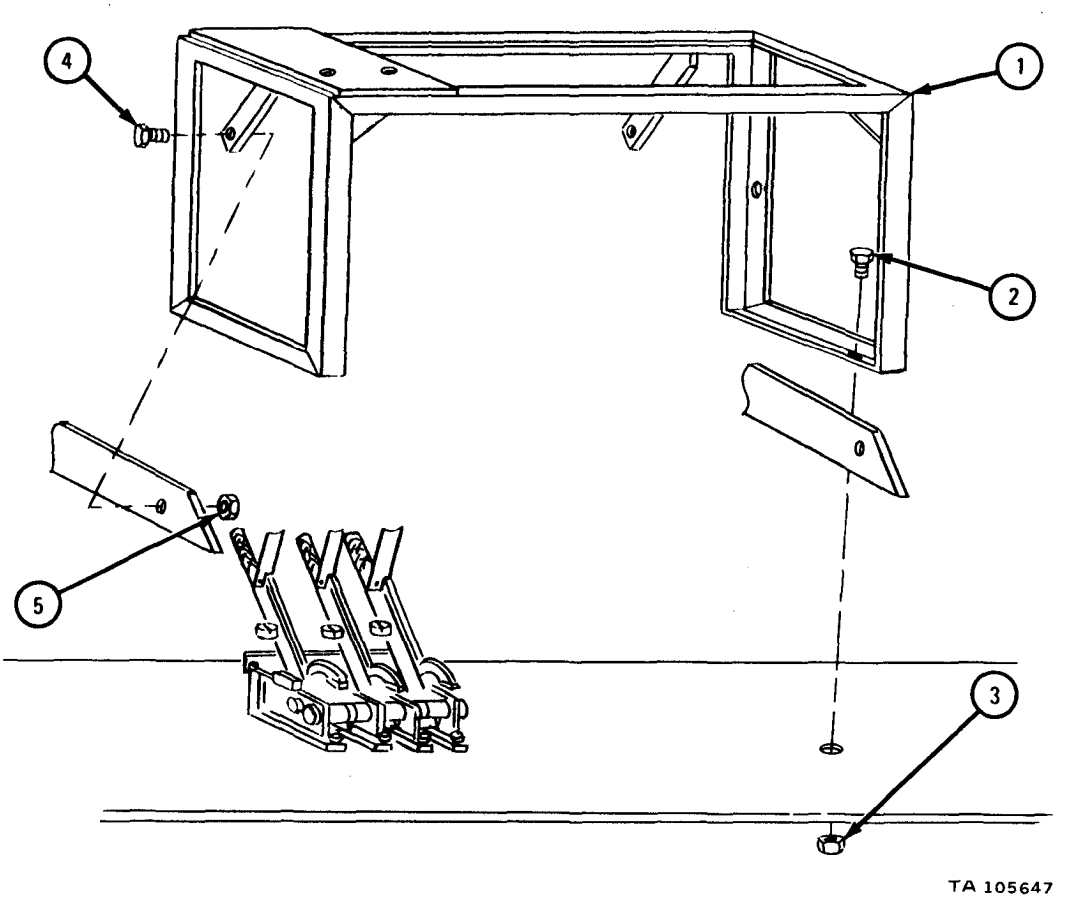

FRAME 10

Soldiers A and B 1. Put sump assembly (1) in place.

Soldier B 2. Put in two screws (2) and nuts (3).

Soldier A 3. Put in screw (4) with nut (5).

4. Put on pipe (6), gasket (7), and two halves of clamp (8).

5. Put in two screws (9) with nuts (10).

GO TO FRAME 11

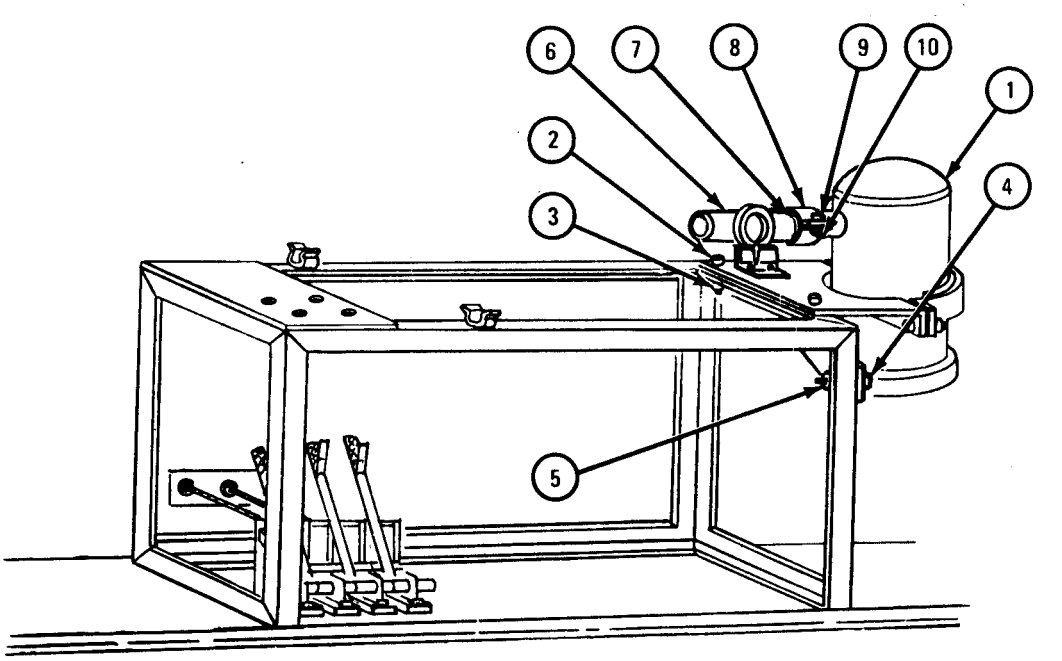

TA 105648

FRAME 11

1. Put in two pipes (1).
2. Put in two valves (2).
3. Put in two pipes (3).

GO TO FRAME 12

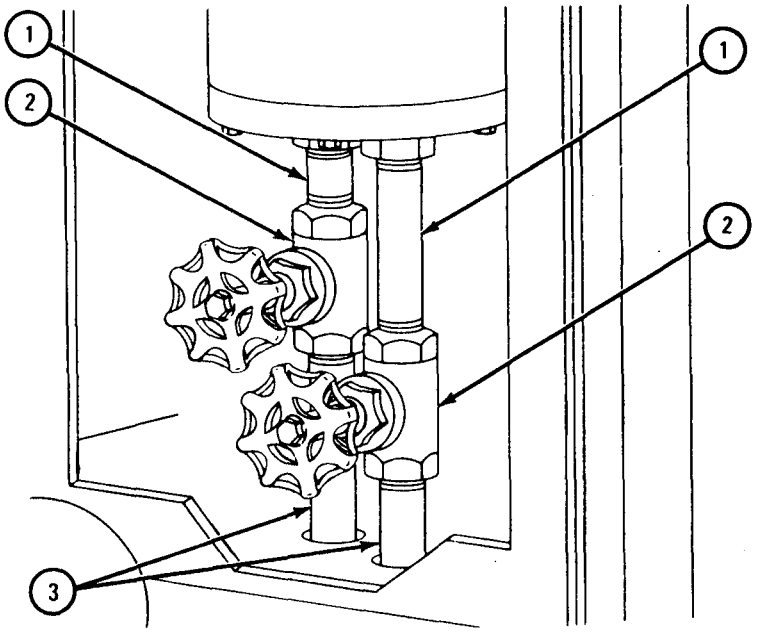

TA 105649

FRAME 12

Soldier A 1. Put static reel (1) in place with two screws (2).

Soldier B 2. Put on two nuts (3).

GO TO FRAME 13

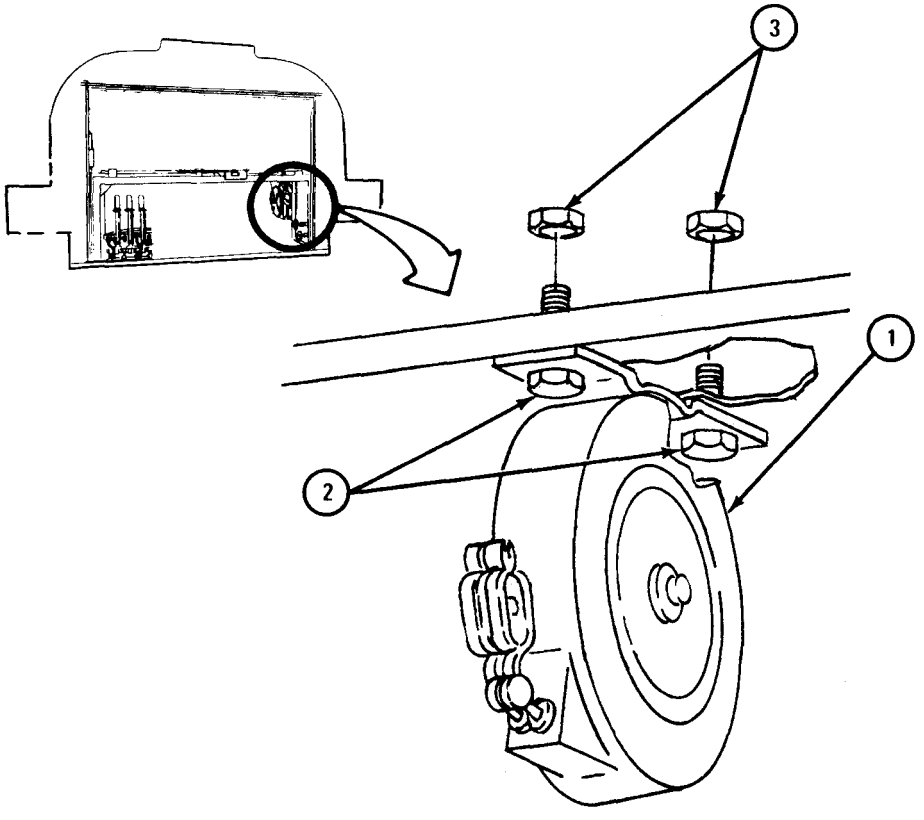

TA 105650

FRAME 13

Soldiers A and B 1. Put pump compartment door (1) in place.

Soldier B 2. Hold door (1).

Soldier A 3. Put in 10 screws (2) and nuts (3).

4. Put in two screws (4) and nuts (5).

Soldiers A ahd B 5. Do steps 1 through 4 again for other pump compartment door (1).

GO TO FRAME 14

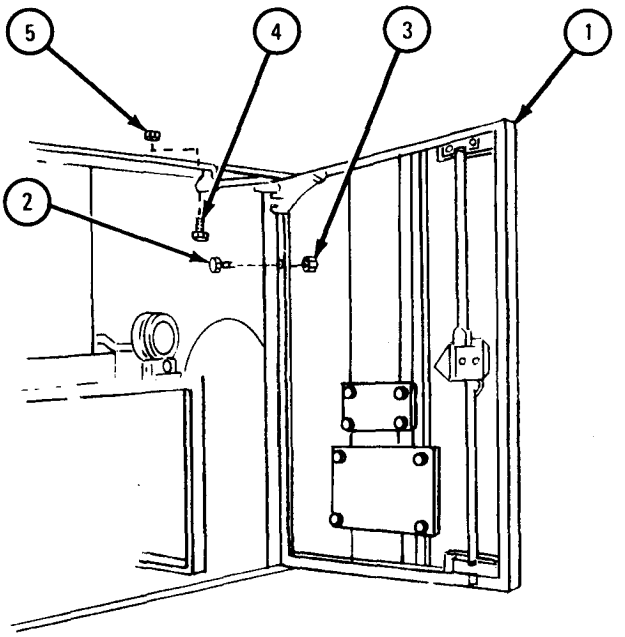

FRAME 14

NOTE

Follow-on Maintenance Action Required:

1. Replace water segregator tank. Refer to TM 9-2320-209-20.
2. Replace fuel delivery pump. Refer to TM 9-2320-209-20.
3. Replace gallon indicating meter. Refer to TM 9-2320-209-20.
4. Replace fuel drain manifold. Refer to TM 9-2320-209-20.
5. Replace gate valves. Refer to TM 9-2320-209-20.
6. Replace discharge valve assembly. Refer to TM 9-2320-209-20.
7. Replace discharge valve operating levers. Refer to TM 9-2320-209-20.
8. Replace discharge valve cables. Refer to TM 9-2320-209-20.
9. Replace emergency release cable. Refer to TM 9-2320-209-20.
10. Replace pioneer tool bracket. Refer to para 17-59.
11. Replace splash shields. Refer to para 17-69.
12. Replace front propeller shaft. Refer to Propeller Shaft and Universal Joint Removal and Replacement, TM 9-2320-209-20.
13. Replace intermediate propeller shaft. Refer to Propeller Shaft and Universal Joint Removal and Replacement, TM 9-2320-209-20.
14. Replace rear propeller shaft. Refer to Propeller Shaft and Universal Joint Removal and Replacement, TM 9-2320-209-20.
15. Reconnect chassis wiring harness. Refer to Part 1, para 7-6.
16. Fill fuel holding compartments. Refer to TM 9-2320-209-10.

END OF TASK

17-28. FUEL TANK BODY REMOVAL, REPAIR AND REPLACEMENT (TRUCK M49A2C).

TOOLS: No special tools required

SUPPLIES: Manhole cover gasket (2)
Discharge valve gasket (2)
Discharge valve coupling gasket (2)
Segregator cover gasket

PERSONNEL: Two

EQUIPMENT CONDITION: Truck parked, engine off, handbrake set.

WARNING

Smoking, sparks or open flame are not allowed within 50 feet of fuel truck during this task. The fuel tank truck will be statically grounded prior to and during all operations.

a. Preliminary Procedures.

(1) Drain all fuel from holding compartments. Refer to TM 9-2320-209-10.

(2) Clean fuel tank truck exterior. Refer to TM 9-247.

(3) Remove pioneer tool bracket. Refer to para 17-59.

(4) Remove splash shields. Refer to para 17-69.

(5) Remove front propeller shaft. Refer to Propeller Shaft and Universal Joint Removal and Replacement, TM 9-2320-209-20.

(6) Remove intermediate propeller shaft. Refer to Propeller Shaft and Universal Joint Removal and Replacement, TM 9-2320-209-20.

(7) Remove rear propeller shaft. Refer to Propeller Shaft and Universal Joint Removal and Replacement, TM 9-2320-208-20.

b. Removal.

FRAME 1

Soldier A 1. Hold screw (1).

Soldier B 2. Take off nut (2) and washer (3).

Soldier A 3. Take off screw (1).

Soldier B 4. Take off clamp ring (4).

Soldier A 5. Take off manhole cover (5).

Soldier B 6. Take off and throw away gasket (6).

Soldiers A and B 7. Do steps 1 through 6 again for other manhole cover (5).

Soldier A 8. Take off chain (7) and fusible safety cap (8).

9. Do step 8 again for other fusible safety cap (8).

GO TO FRAME 2

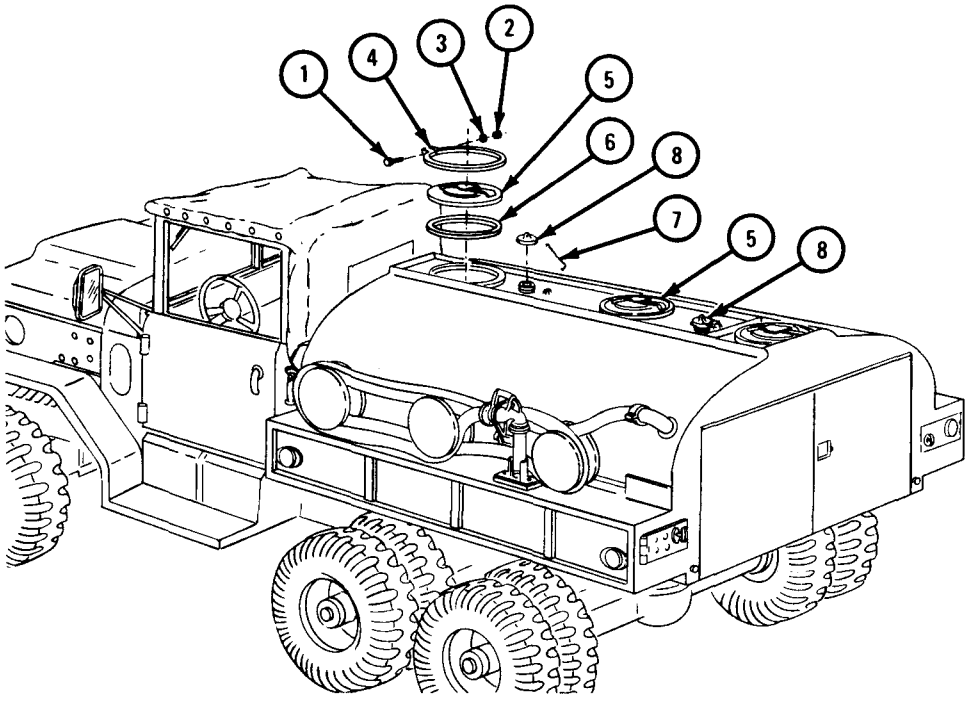

TA 101089

FRAME 2

Soldier A 1. Hold screw (1).
Soldier B 2. Take off nut (2) and flat washer (3).
Soldier A 3. Take out screw (1).
Soldier B 4. Take off retaining ring (4).
5. Take off segregator cover (5).
Soldier A 6. Take off and throw away gasket (6).
7. Take off fire extinguisher (7).
8. Take off two capscrews (8) and bracket (9).

GO TO FRAME 3

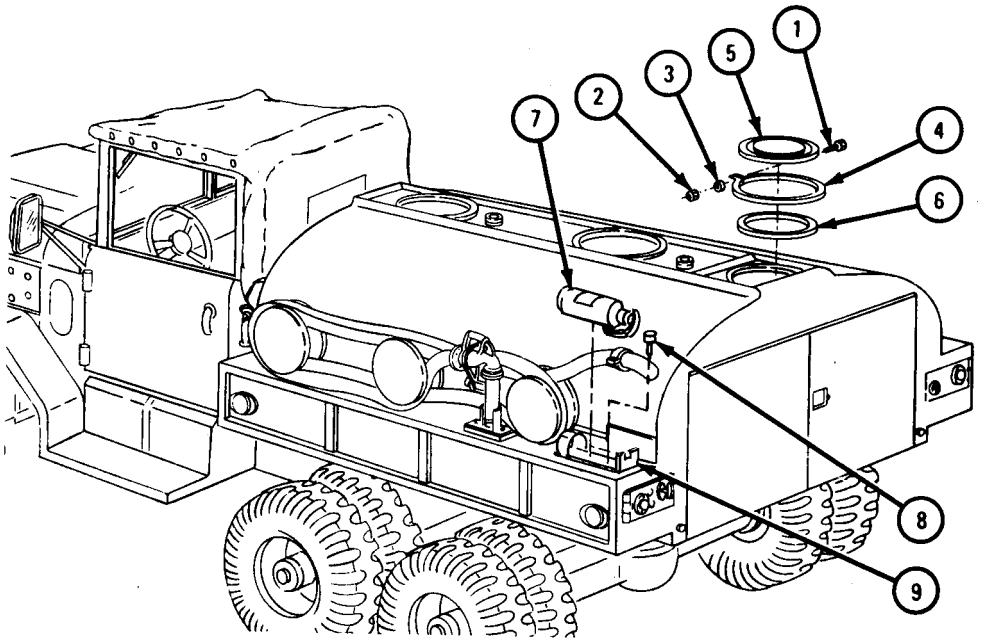

TA 101090

FRAME 3

Soldier A 1. Hold nut (1).

Soldier B 2. Unscrew coupling nut (2).

Soldier A 3. Take out nozzle (3).

Soldiers A and B 4. Take off discharge hose (4).

Soldier A 5. Hold two nuts (5).

Soldier B 6. Take out two screws (6).

7. Take off nozzle bracket (7).

GO TO FRAME 4

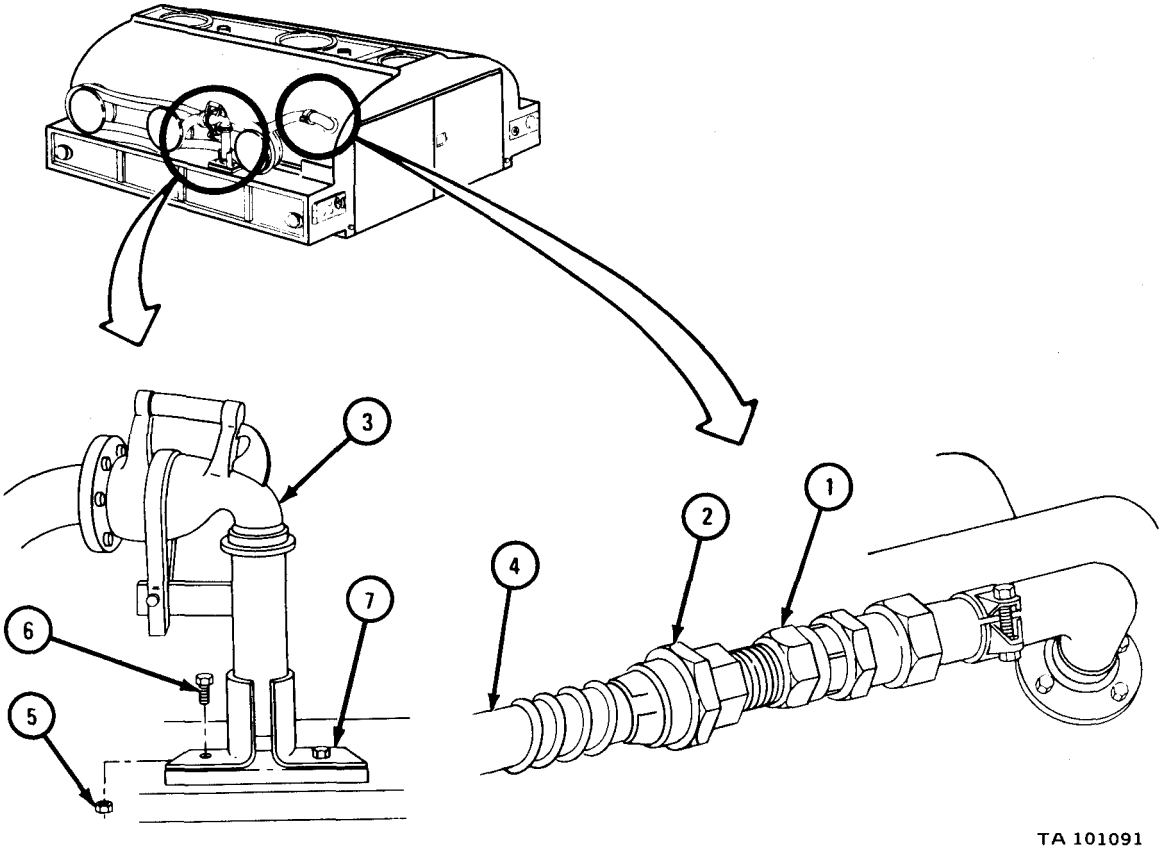

FRAME 4

Soldier A	1.	File off staking on hinge pin (1) at points (2).
	2.	Drive out hinge pin (1).
Soldier B	3.	Take off hose compartment door (3).
Soldiers A and B	4.	Do steps 1, 2, and 3 again for other hose compartment door (3).
Soldier A	5.	Hold two nuts (4).
Soldier B	6.	Take out two screws (5).
	7.	Take off reflector (6).
Soldiers A and B	8.	Do steps 5, 6, and 7 again for five other reflectors (6).

GO TO FRAME 5

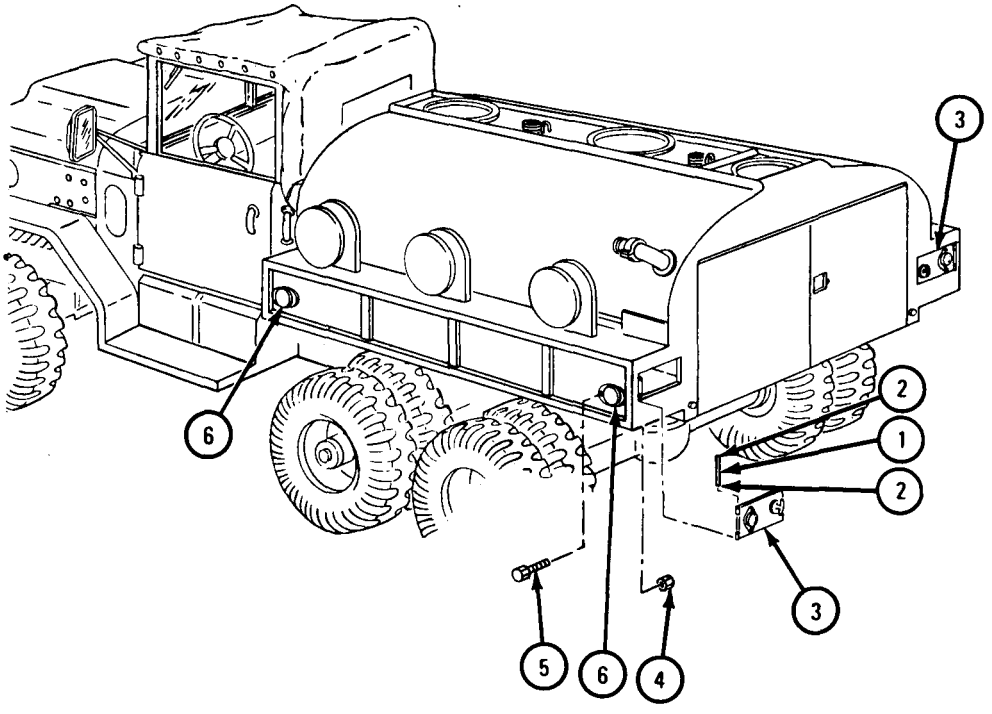

TA 101092

FRAME 5

Soldier A 1. Take off two clean out plugs (1).
2. Loosen screw (2).
Soldier B 3. Take off tube (3).
Soldier A 4. Take off tube clamp (4).
5. Take off two nuts (5).
Soldier B 6. Take out U-bolt (6).
GO TO FRAME 6

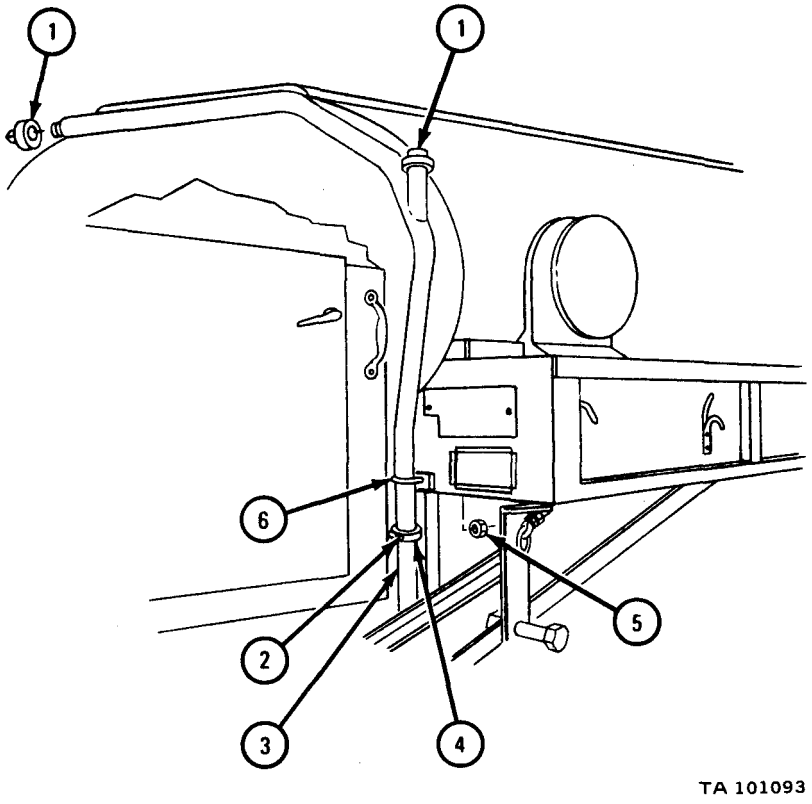

FRAME 6

Soldier A 1. Take out two screws (1).

Soldier B 2. Take off hose compartment front cover plate (2).

Soldiers A and B 3. Do steps 1 and 2 again for other hose compartment front cover plate.

Soldier A 4. Hold two nuts (3).

Soldier B 5. Take out two screws (4).

6. Take off lashing hook (5).

Soldiers A and B 7. Do steps 4, 5, and 6 again for 11 other lashing hooks (5).

GO TO FRAME 7

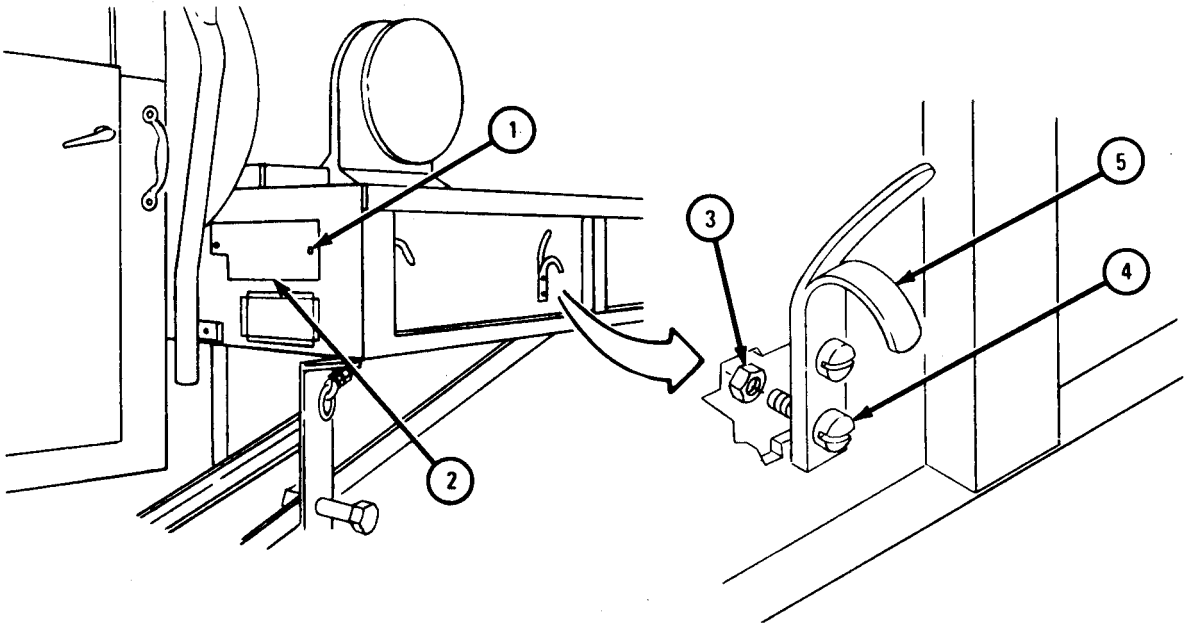

TA 101094

FRAME 7

Soldier A 1. Hold two nuts (1).

Soldier B 2. Take out two screws (2).

Soldier A 3. Hold 10 nuts (3).

Soldier B 4. Take out 10 screws (4).

Soldiers A and B 5. Take off pump compartment door (5).

6. Do steps 1 through 5 again for other pump compartment door.

GO TO FRAME 8

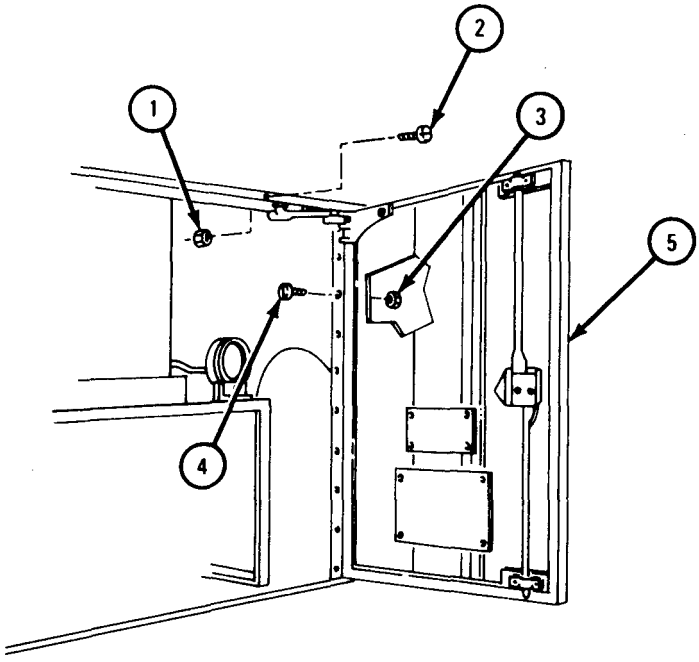

TA 101095

FRAME 8

Soldier A 1. Hold two nuts (1).

Soldier B 2. Take out two screws (2).

3. Take out static reel (3).

GO TO FRAME 9

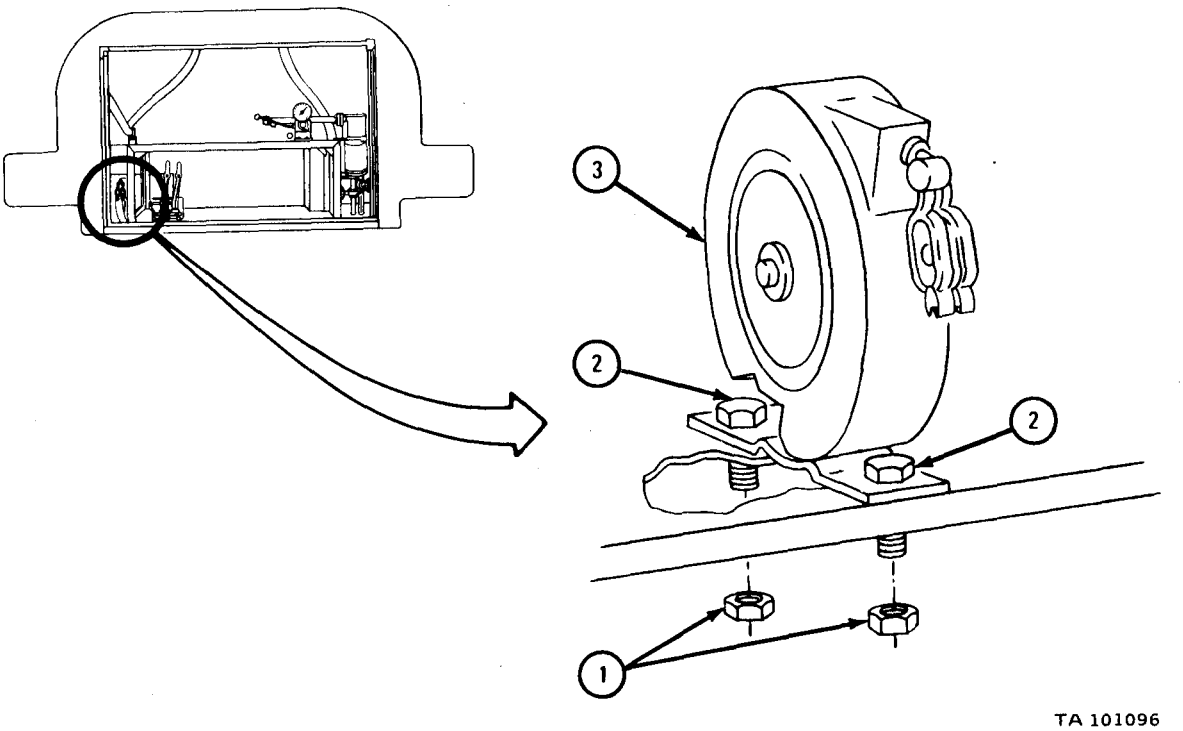

FRAME 9

Soldier A 1. Unscrew three line nuts (1).
Soldier B 2. Take off three lines (2).
Soldier A 3. Hold two nuts (3).
Soldier B 4. Take out two screws (4).
5. Take off gage assembly (5).

GO TO FRAME 10

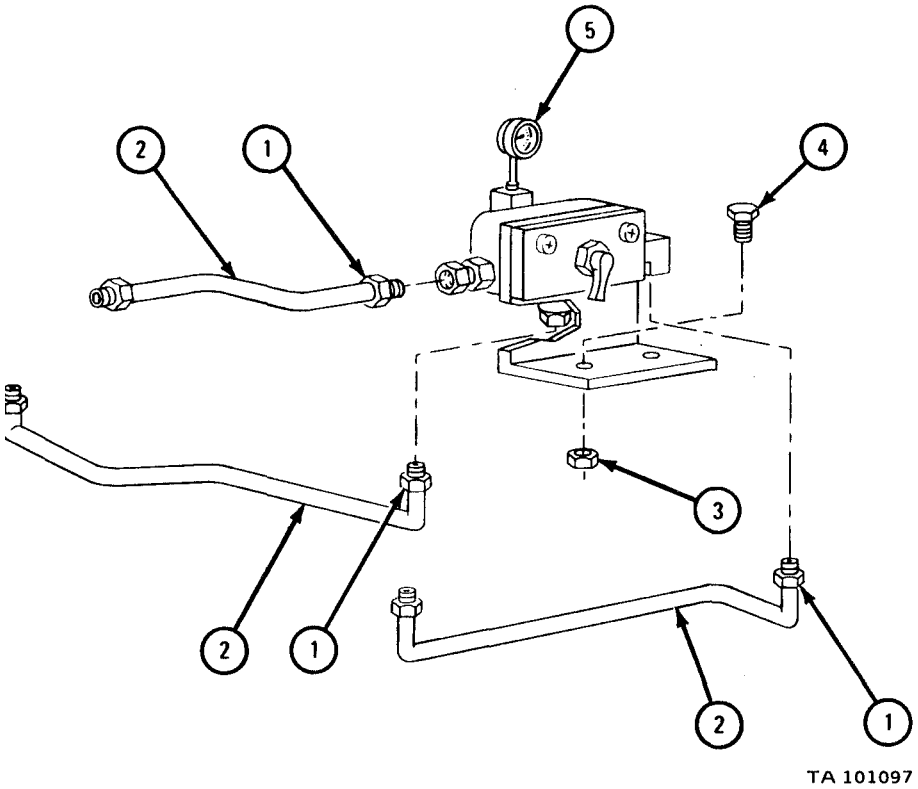

FRAME 10

1. Take out two pipes (1).
2. Take off two valves (2).
3. Take out two pipes (3).

GO TO FRAME 11

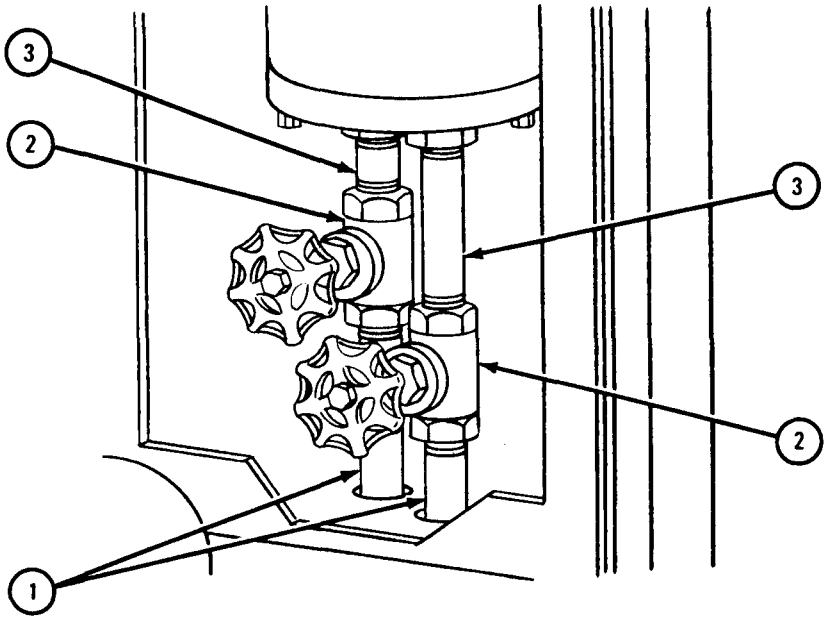

TA 101098

FRAME 11

Soldier A 1. Hold two nuts (1).

Soldier B 2. Take out two screws (2).

3. Take off two halves of clamp (3), gasket (4), and pipe (5).

Soldier A 4. Hold nut (6).

Soldier B 5. Take out screw (7).

GO TO FRAME 12

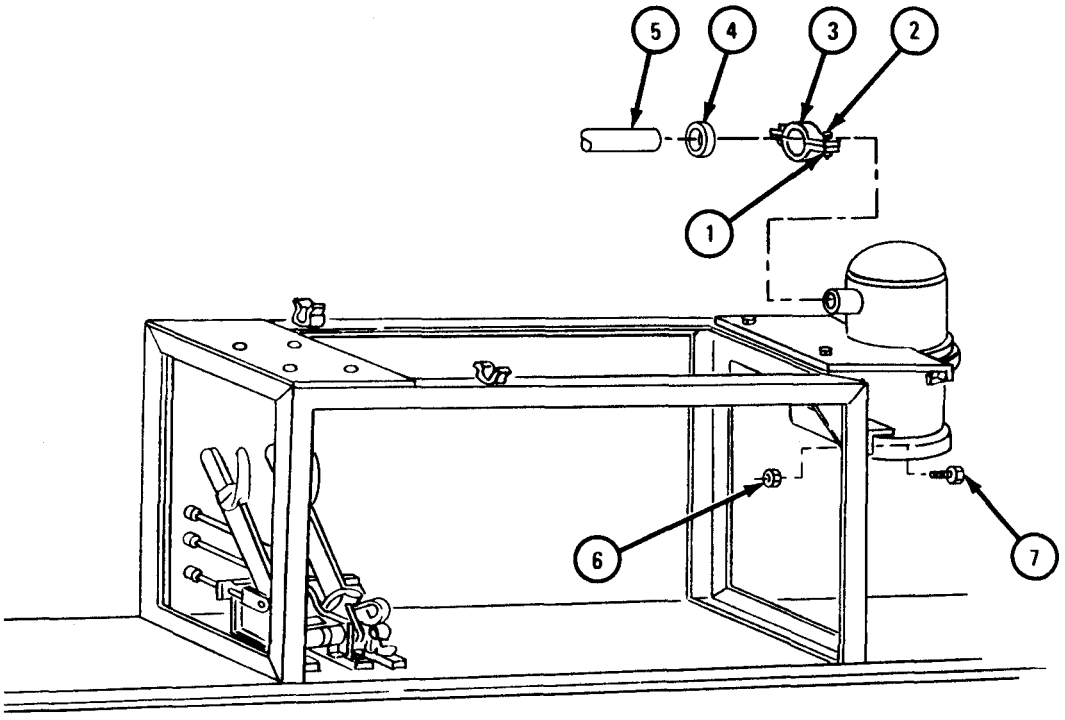

TA 101099

FRAME 12

Soldier A 1. Hold sump assembly (1).

Soldier B 2. Take off two nuts (2).

3. Take out two screws (3).

Soldiers A and B 4. Take out sump assembly (1).

GO TO FRAME 13

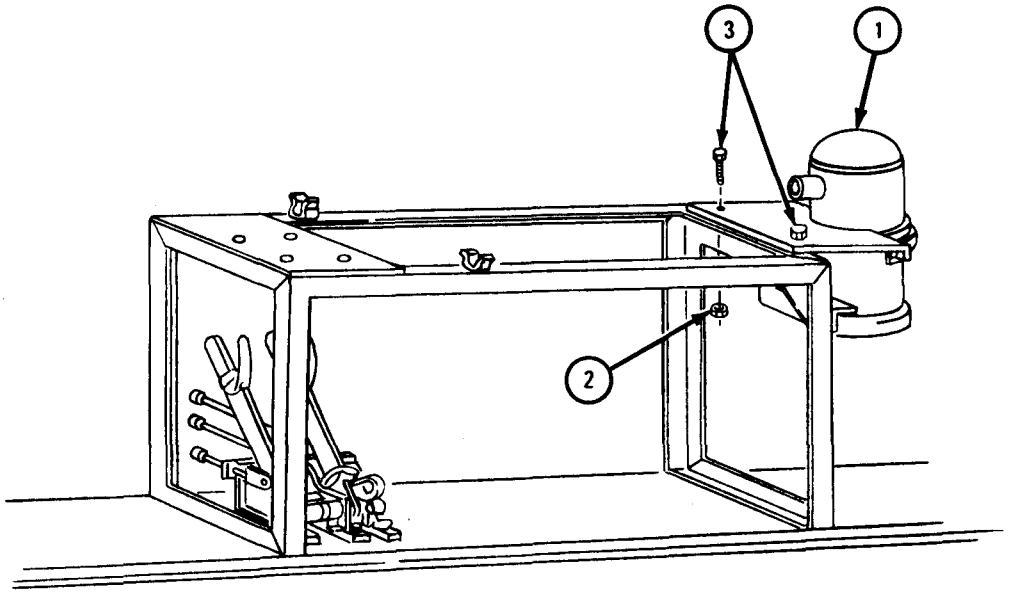

TA 101100

FRAME 13

Soldier A 1. Hold two nuts (1).

Soldier B 2. Take out two screws (2).

Soldier A 3. Hold four nuts (3).

Soldier B 4. Take out four screws (4).

Soldiers A and B 5. Take out segregator stand (5).

GO TO FRAME 14

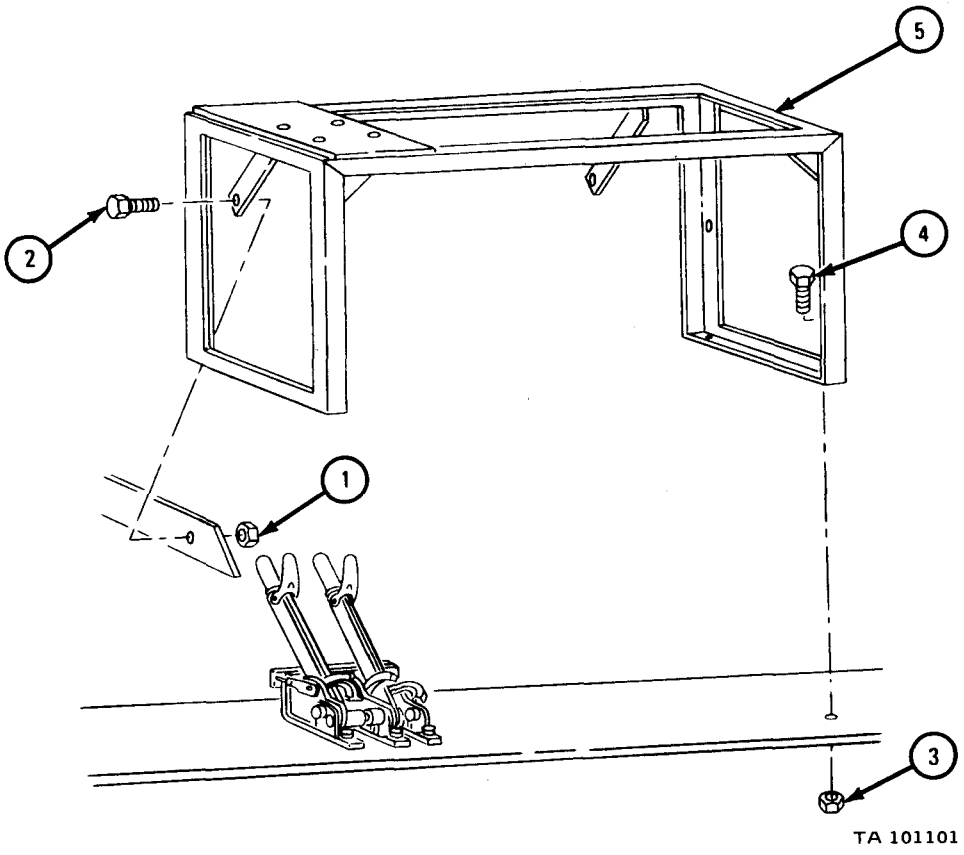

FRAME 14

Soldier A 1. Hold four nuts (1).

Soldier B 2. Take out four screws (2).

3. Take off outside meter outlet tube (3).

Soldier A 4. Take off inside meter outlet tube (4).

GO TO FRAME 15

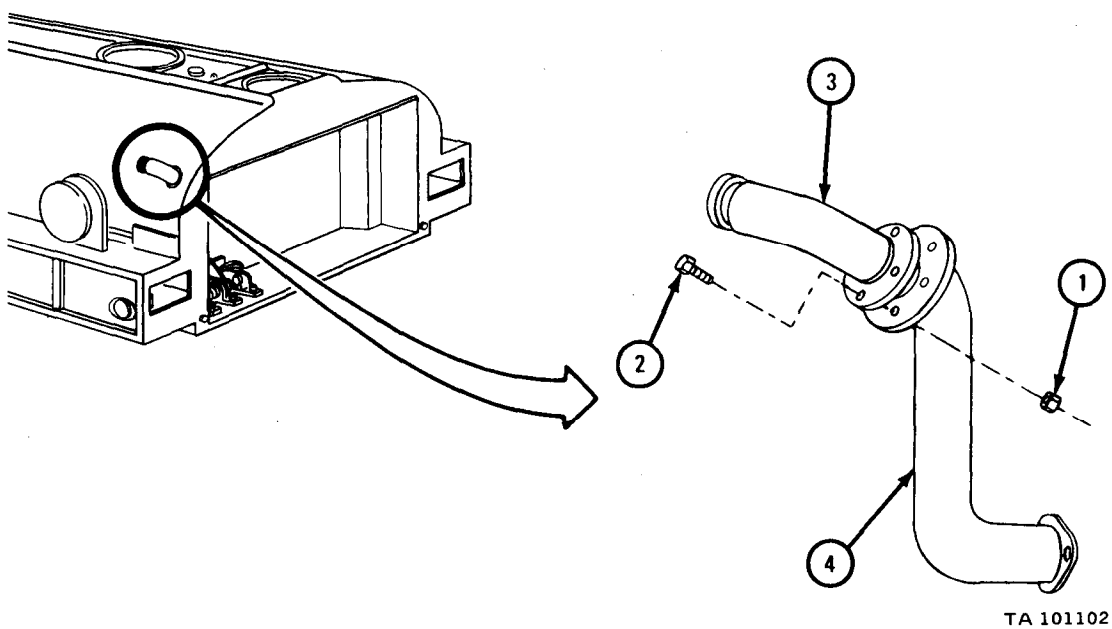

FRAME 15

WARNING

Always wear protective gloves when handling cable. Do not let cable slip through hands. Rusty or broken wires can cause injury.

Soldier A
1. Loosen nut (1).
2. Take out rear discharge valve cable (2).

Soldier B
3. Loosen two nuts (3).
4. Take out rear discharge cable (2). Pull rear discharge cable out of truck.

Soldiers A and B
5. Do steps 1 through 4 again for other discharge cable.

GO TO FRAME 16

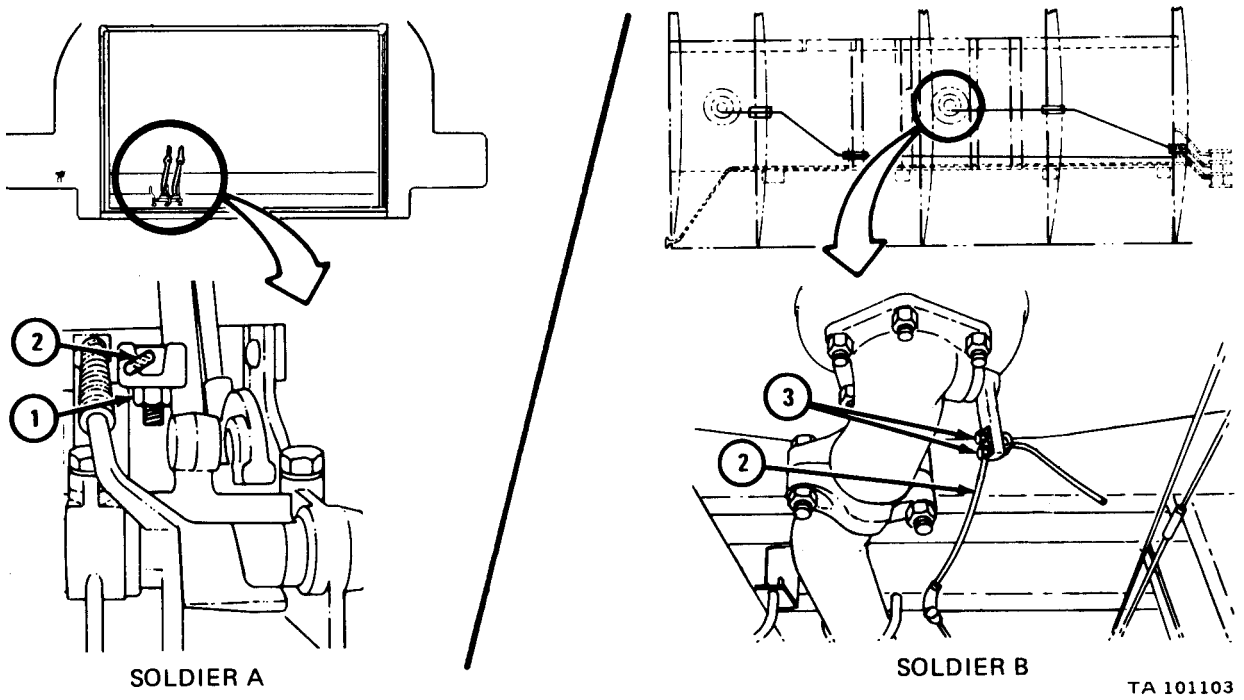

FRAME 16

Soldier A 1. Loosen nut (1).
2. Take out emergency release cable (2).
Soldier B 3. Pull emergency release cable (2) out of truck.
GO TO FRAME 17

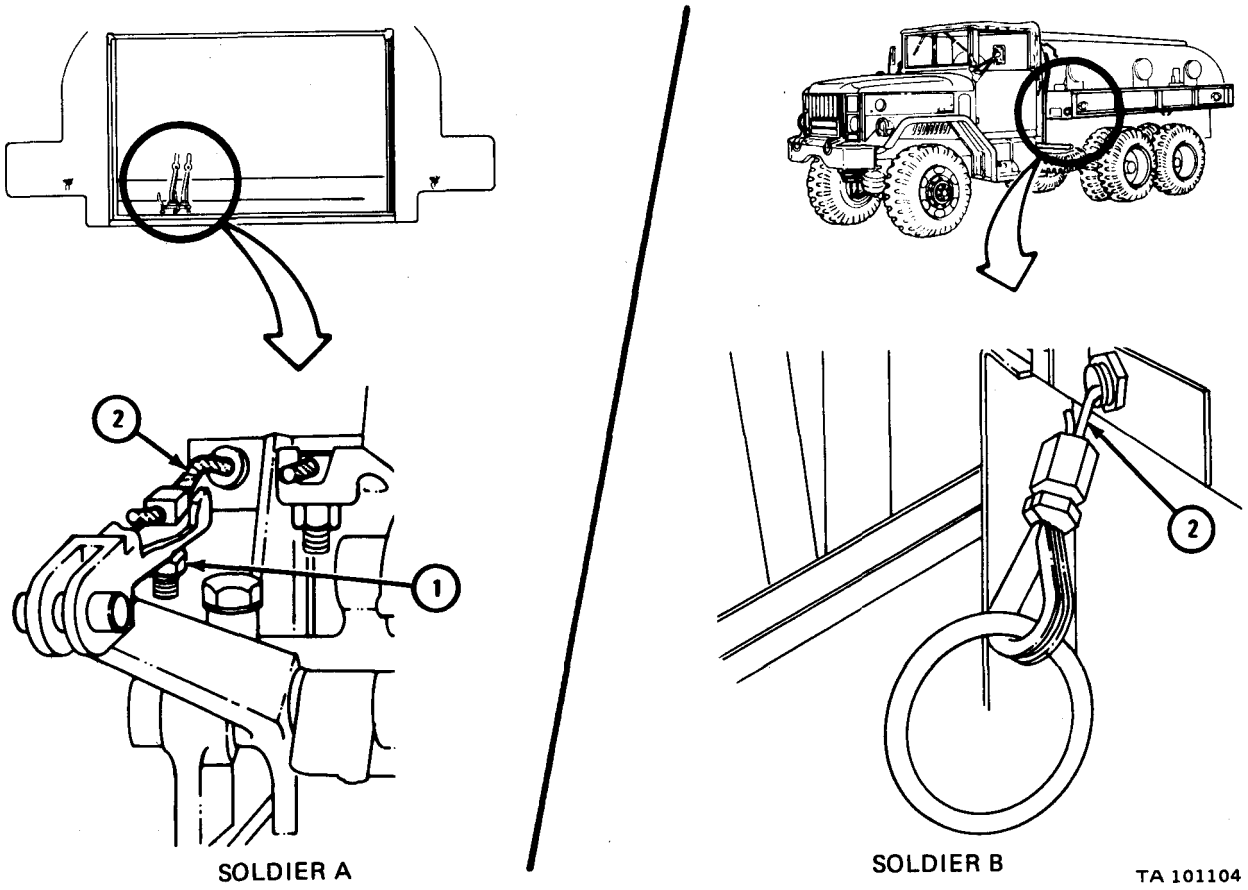

FRAME 17

Soldier A 1. Unscrew three nuts (1).
Soldier B 2. Hold three nuts (2).
Soldier A 3. Take out three screws (3).
Soldier B 4. Hold three nuts (4).
Soldier A 5. Take out three screws (5).
6. Take out discharge valve controls (6).

GO TO FRAME 18

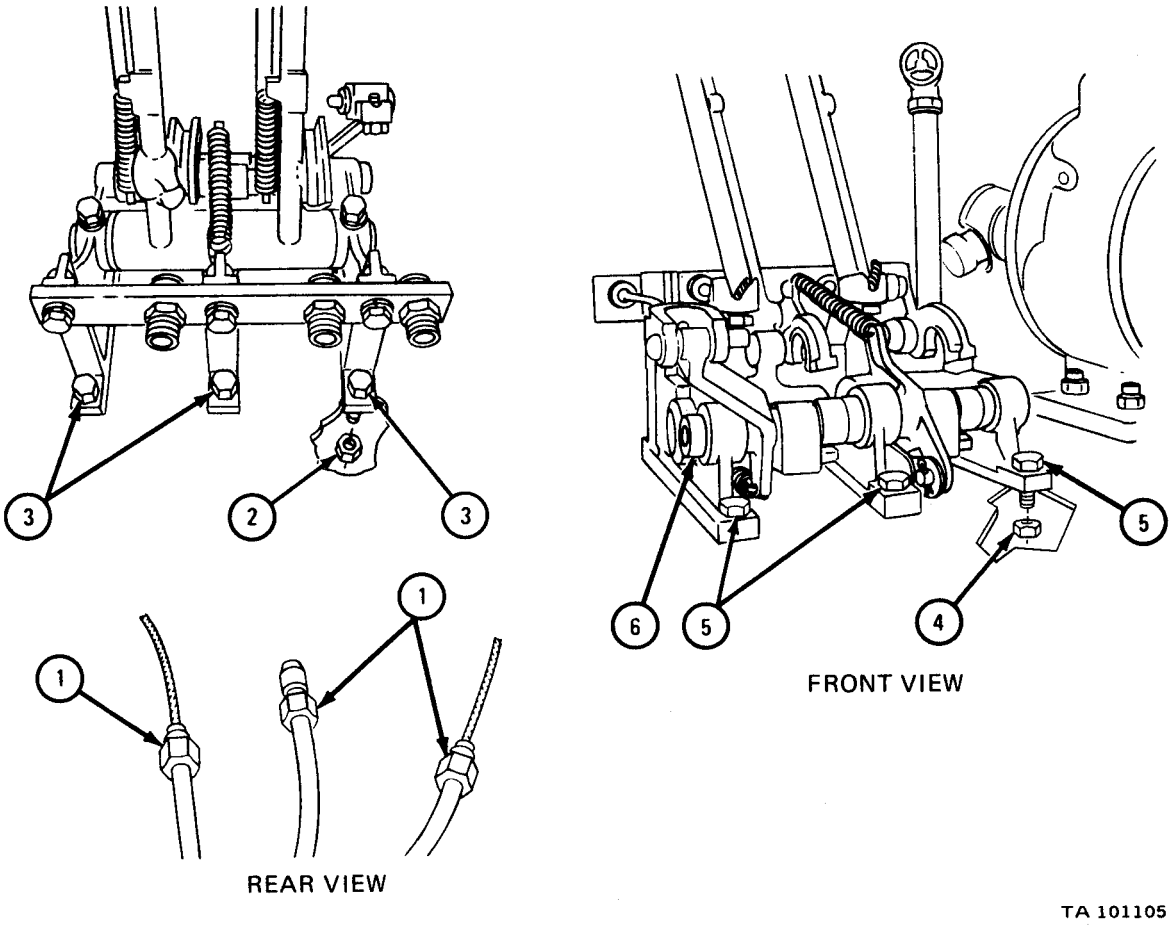

FRAME 18

Soldier A 1. Hold two screws (1).

Soldier B 2. Take off two nuts (2) and lower coupling part (3).

Soldier A 3. Take off two screws (1) and upper coupling part (4).

4. Take off and throw away gasket (5).

Soldiers A and B 5. Do steps 1 through 4 again for other discharge valve (6).

GO TO FRAME 19

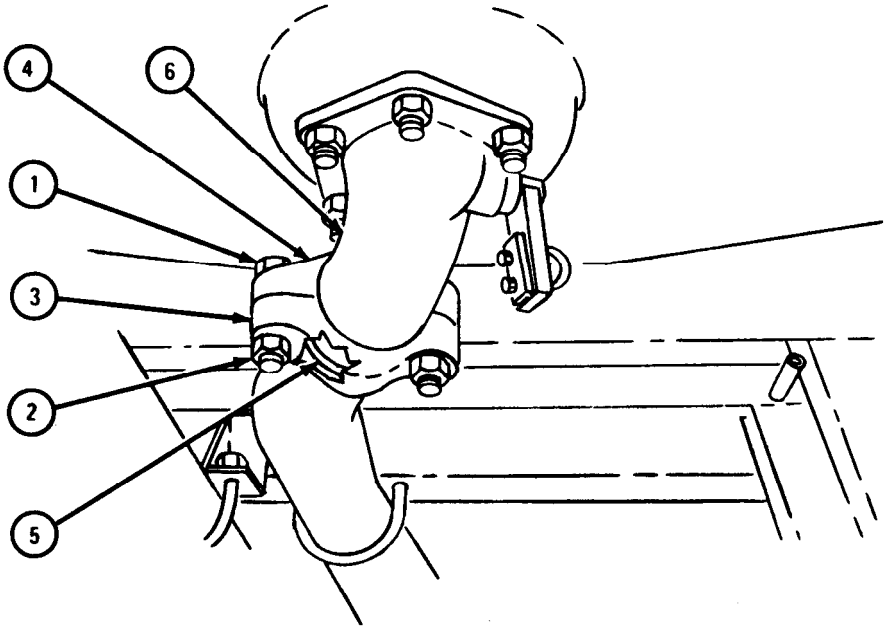

TA 101106

FRAME 19

Soldier A	1.	Take off six nuts (1).
Soldier B	2.	Take off discharge valve (2) and gasket (3).
Soldiers A and B	3.	Do steps 1 and 2 again for other discharge valve (2).
Soldier A	4.	Take off two nuts (4).
	5.	Take out U-bolt (5).
	6.	Do steps 4 and 5 again for three other U-bolts (5).
Soldiers A and B	7.	Take out discharge tube (6).
	8.	Do steps 4 through 7 again for other discharge tube (6).

GO TO FRAME 20

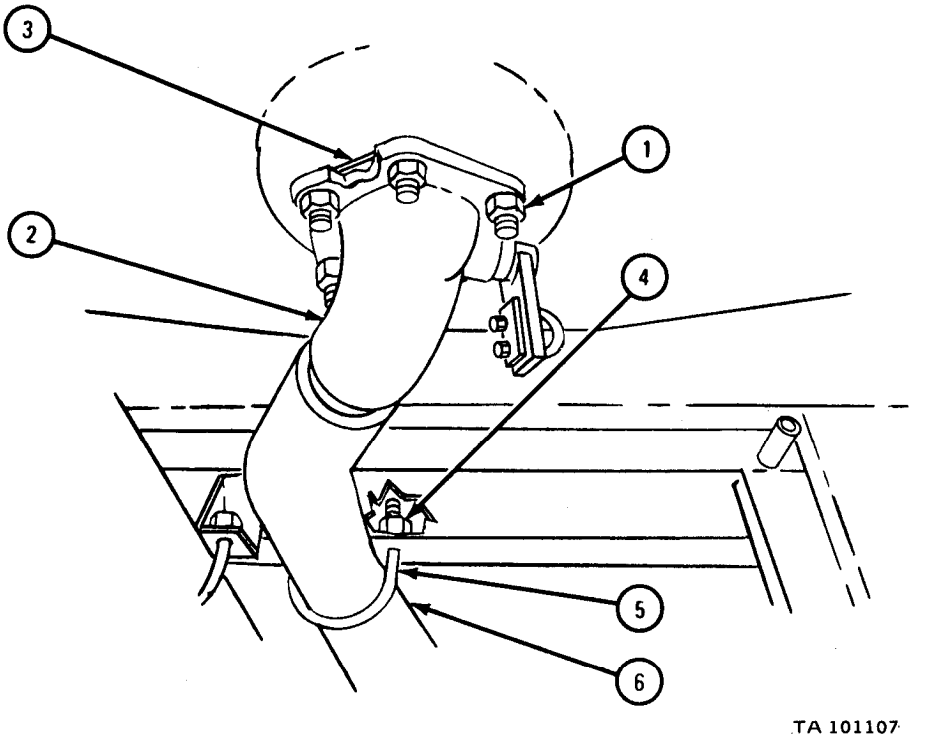

FRAME 20

1. Take off two nuts (1) and washers (2).
2. Take off two inner springs (3) and outer springs (4).
3. Take out two screws (5) and washers (6).
4. Take off nut (7).
5. Take out screw (8).
6. Do steps 4 and 5 again for two other side mounts (9).
7. Do steps 1 through 6 again for right side of truck.

GO TO FRAME 21

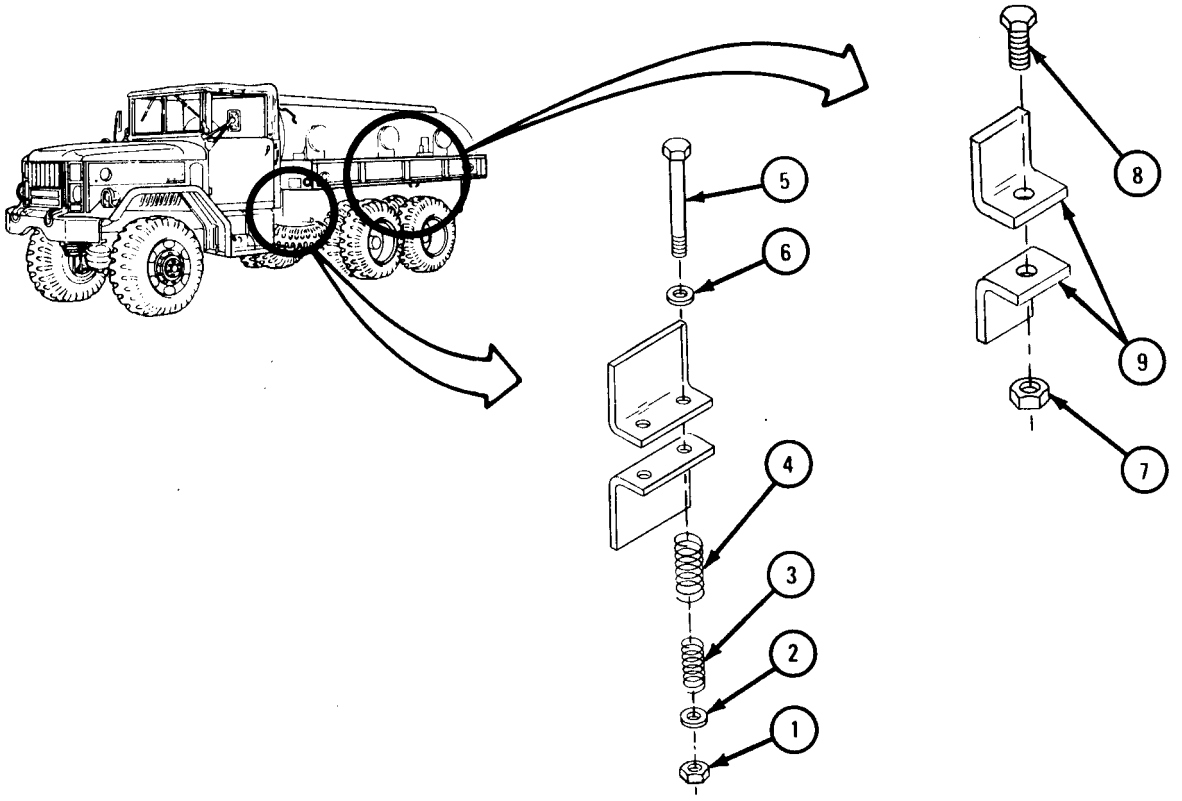

TA 101108

FRAME 21

Soldiers A and B 1. Put chain sling (1) around tank body (2) and hook chain sling on hoist.

NOTE

Wood blocks must be high and sturdy to allow for working under tank body.

Soldier A 2. Guide tank body (2) off truck and onto wood blocks as soldier B lifts body.

Soldier B 3. Using hoist, lift tank body (2) off truck and onto wood blocks.

Soldiers A and B 4. Unhook chain sling (1) from tank body (2).

END OF TASK

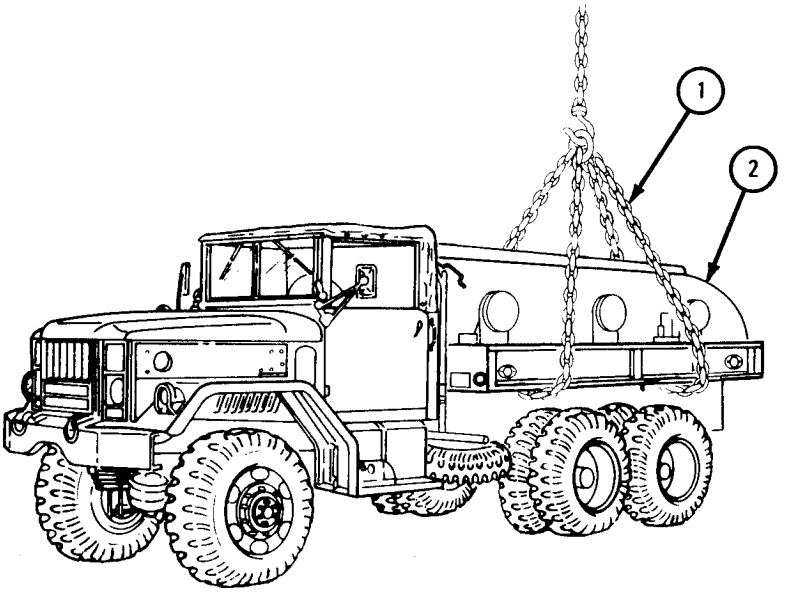

TA 101109

c. Cleaning. Refer to TB 43-0212 and TM 9-247.

d. Inspection and Repair. Refer to FM 43-2.

e. Replacement.

FRAME 1

Soldiers A and B	1. Put chain sling (1) around tank body (2) and hook chain sling on hoist.
Soldier A	2. Guide tank body (2) onto truck as soldier B lifts body.
Soldier B	3. Using hoisting equipment, lift tank body (2) onto truck as soldier A directs.
Soldiers A and B	4. Unhook chain sling (1) from tank body (2).

GO TO FRAME 2

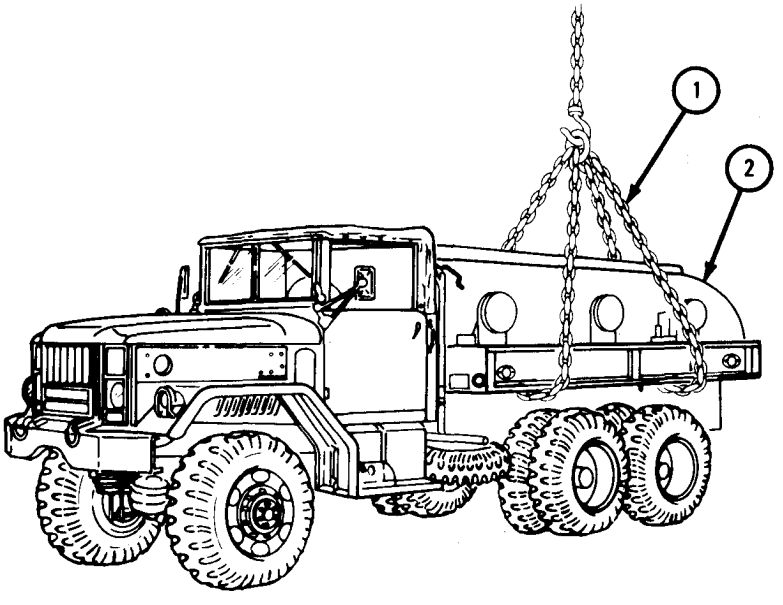

TA 101109

FRAME 2

1. Put in screw (1) with washer (2).
2. Put on two springs (3).
3. Put on washer (4) and nut (5).
4. Put in screw (6).
5. Put on nut (7).
6. Do steps 4 and 5 again for two other side mounts (8).
7. Do steps 1 through 6 again for right side of truck.

GO TO FRAME 3

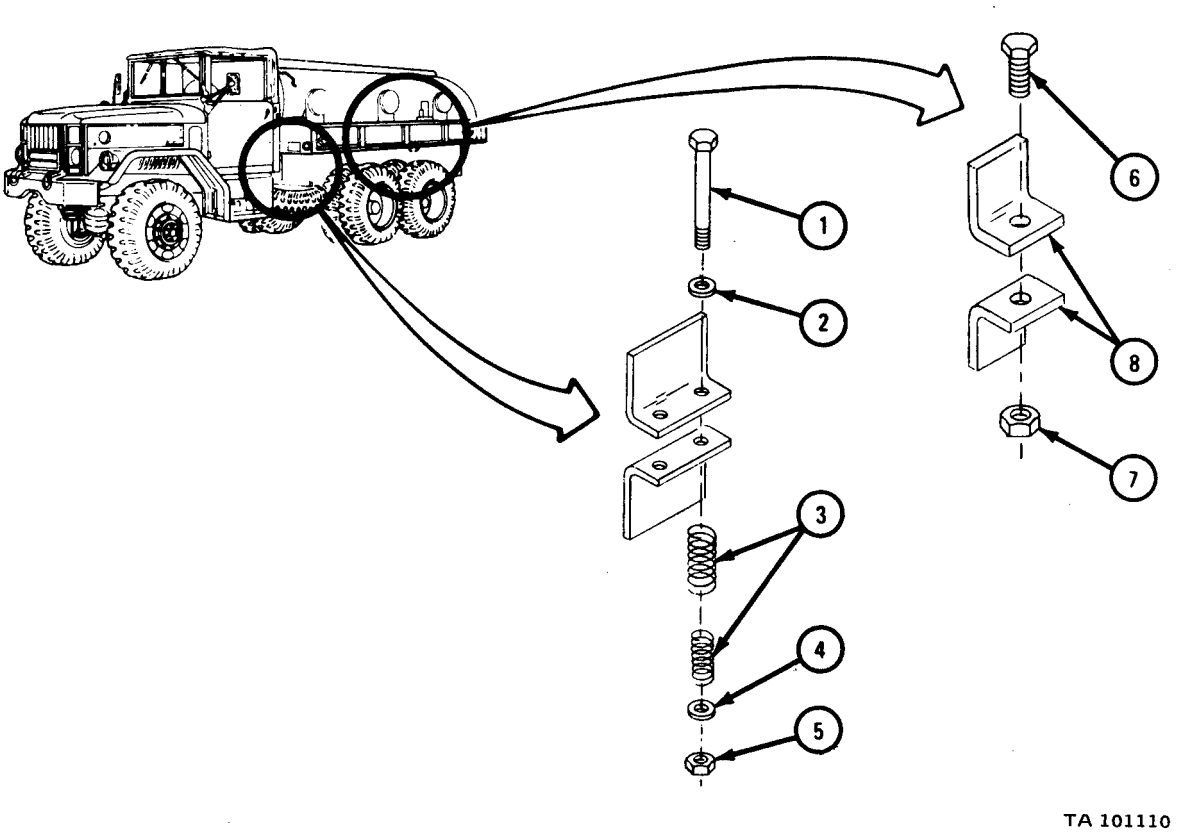

FRAME 3

Soldier A	1.	Put on gasket (1).
Soldier B	2.	Put on manhole cover (2).
Soldier A	3.	Put on clamp ring (3).
	4.	Put in screw (4) and hold screw.
Soldier B	5.	Put on washer (5) and nut (6).
Soldiers A and B	6.	Do steps 1 through 5 again for other manhole cover (2).
	7.	Put on fusible safety cap (7) and chain (8).
	8.	Do step 7 again for other safety cap (7).

GO TO FRAME 4

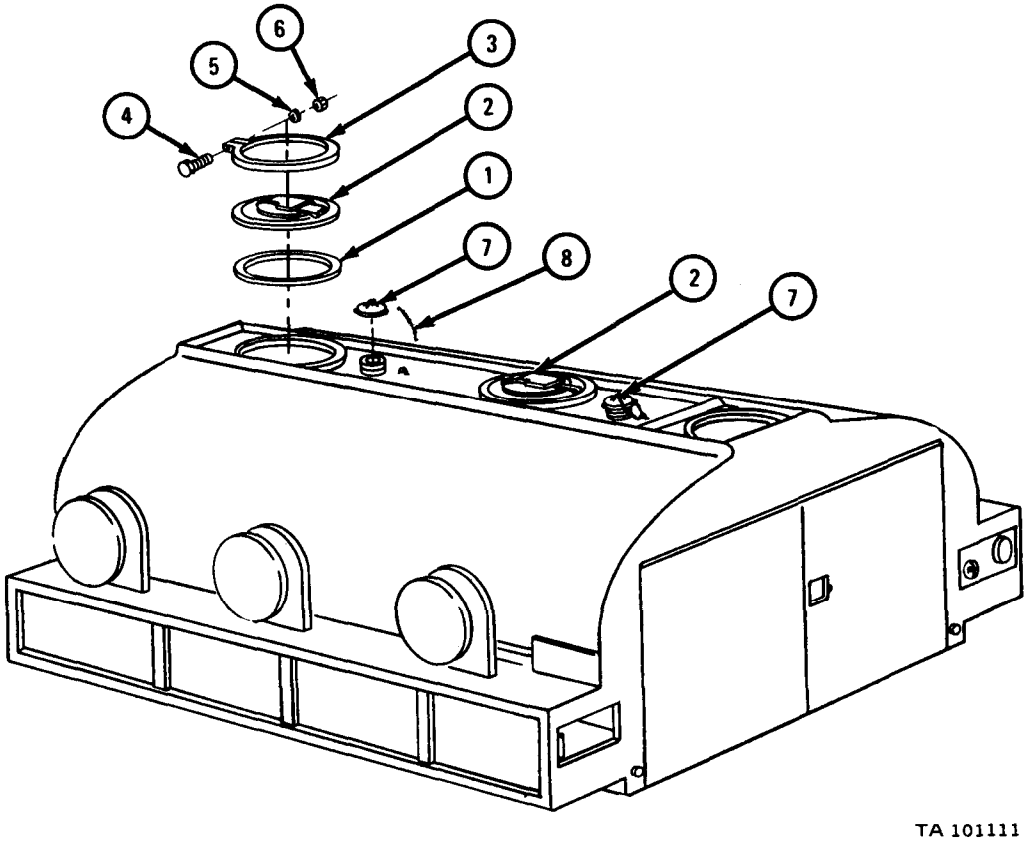

FRAME 4

Soldier A 1. Puton gasket (1).
Soldier B 2. Put on segregator cover (2).
Soldier A 3. Put on retaining ring (3).
Soldier B 4. Put in screw (4) and hold screw.
Soldier A 5. Put on washer (5) and nut (6).
6. Put bracket (7) in place. Put in two capscrews (8).
7. Putin fire extinguisher (9).

GO TO FRAME 5

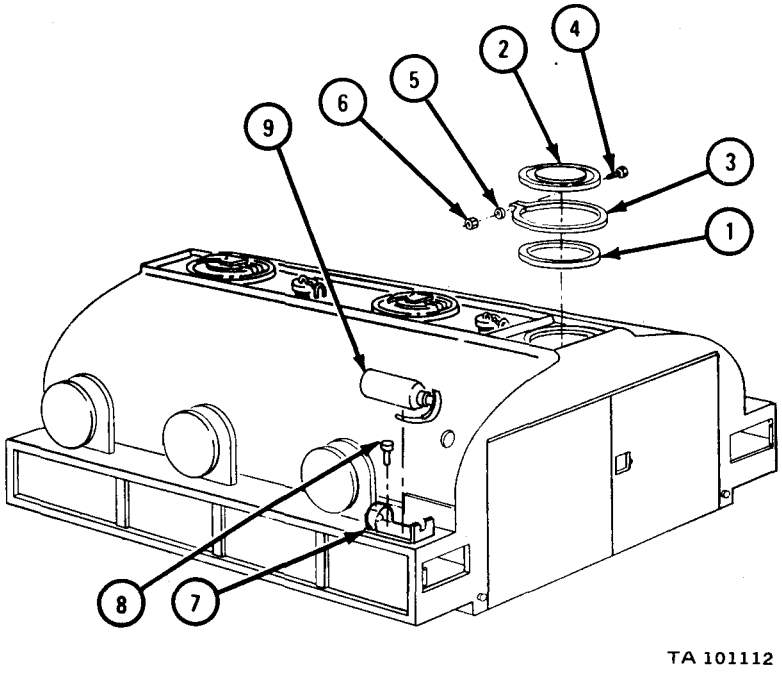

FRAME 5

Soldier A	1.	Aline screw holes of hose compartment front cover plate (1) to tank body (2).
Soldier B	2.	Put in two screws (3).
Soldiers A and B	3.	Do steps 1 and 2 again for other hose compartment front cover plate.
Soldier A	4.	Aline screw holes of lashing hook (4) with screw holes in tank body (2) and put in two screws (5). Hold two screws.
Soldier B	5.	Put on two nuts (6).
Soldiers A and B	6.	Do steps 4 and 5 again for other 11 lashing hooks (4).

GO TO FRAME 6

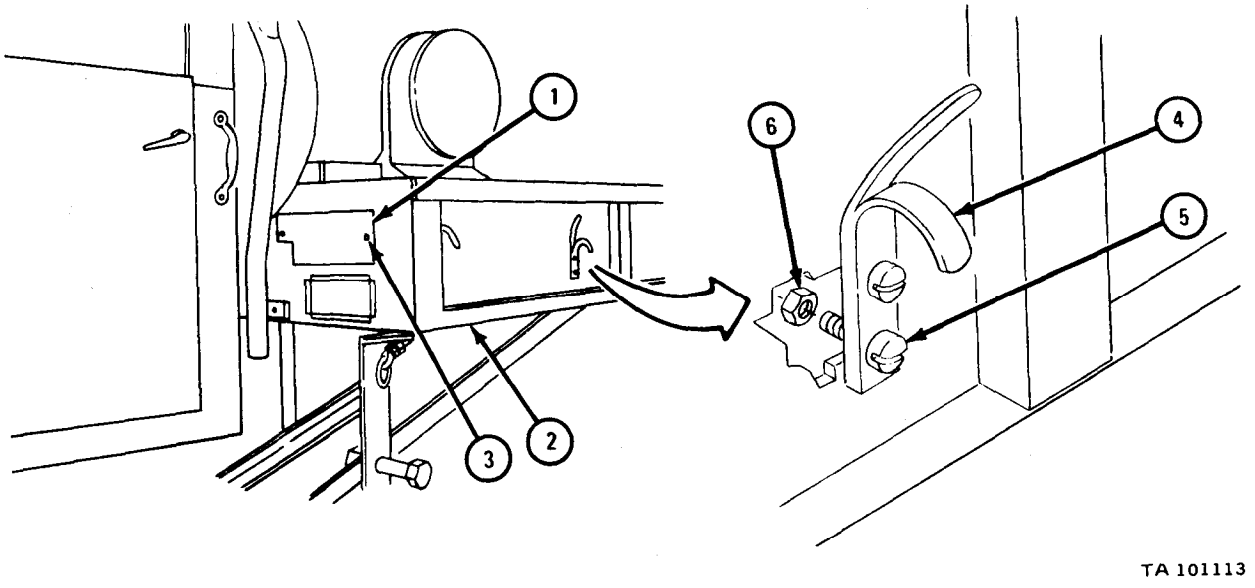

FRAME 6

Soldier A 1.	Aline screw holes of reflector (1) with screw holes in tank body (2) and put in two screws (3). Hold two screws.
Soldier B 2.	Put on two nuts (4).
Soldiers A and B 3.	Do steps 1 and 2 again for other five reflectors.
Soldier A 4.	Aline holes in hinge of hose compartment door (5) with holes in hinge on tank body (2) and put in hinge pin (6).
Soldier B 5.	Stake hinge pin (6) at both ends.
Soldiers A and B 6.	Do steps 4 and 5 again for other hose compartment door.

GO TO FRAME 7

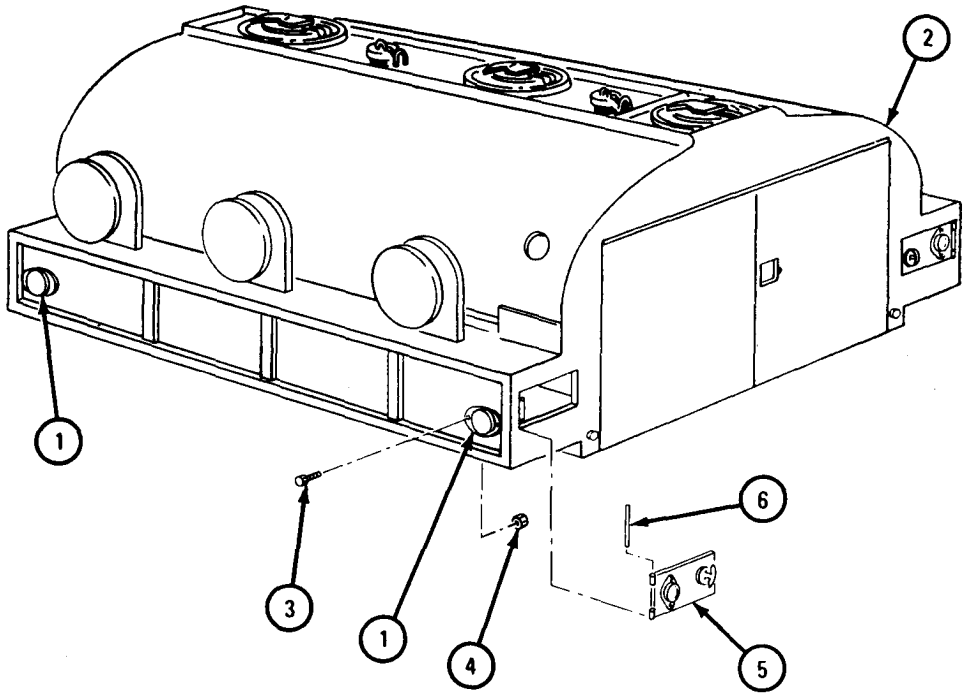

TA 101114

FRAME 7

Soldier A 1. Put on tube (1) and tube clamp (2).
Soldier B 2. Tighten tube clamp screw (3).
Soldier A 3. Put in U-bolt (4).
Soldier B 4. Put on two nuts (5).
Soldier A 5. Put on two clean out plugs (6).

GO TO FRAME 8

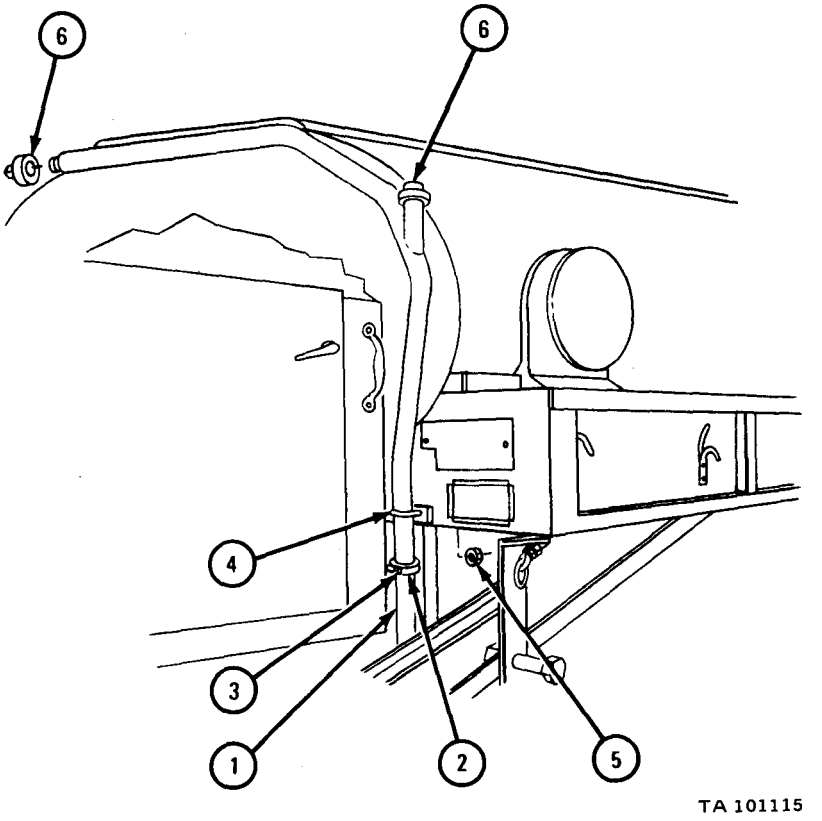

FRAME 8

Soldier A 1. Aline screw holes in outside meter outlet tube (1) with screw holes in tank body (2) and put in four screws (3). Hold four screws.

Soldier B 2. Put inside meter outlet tube (4) over four screws (3) and put on four nuts (5).

GO TO FRAME 9

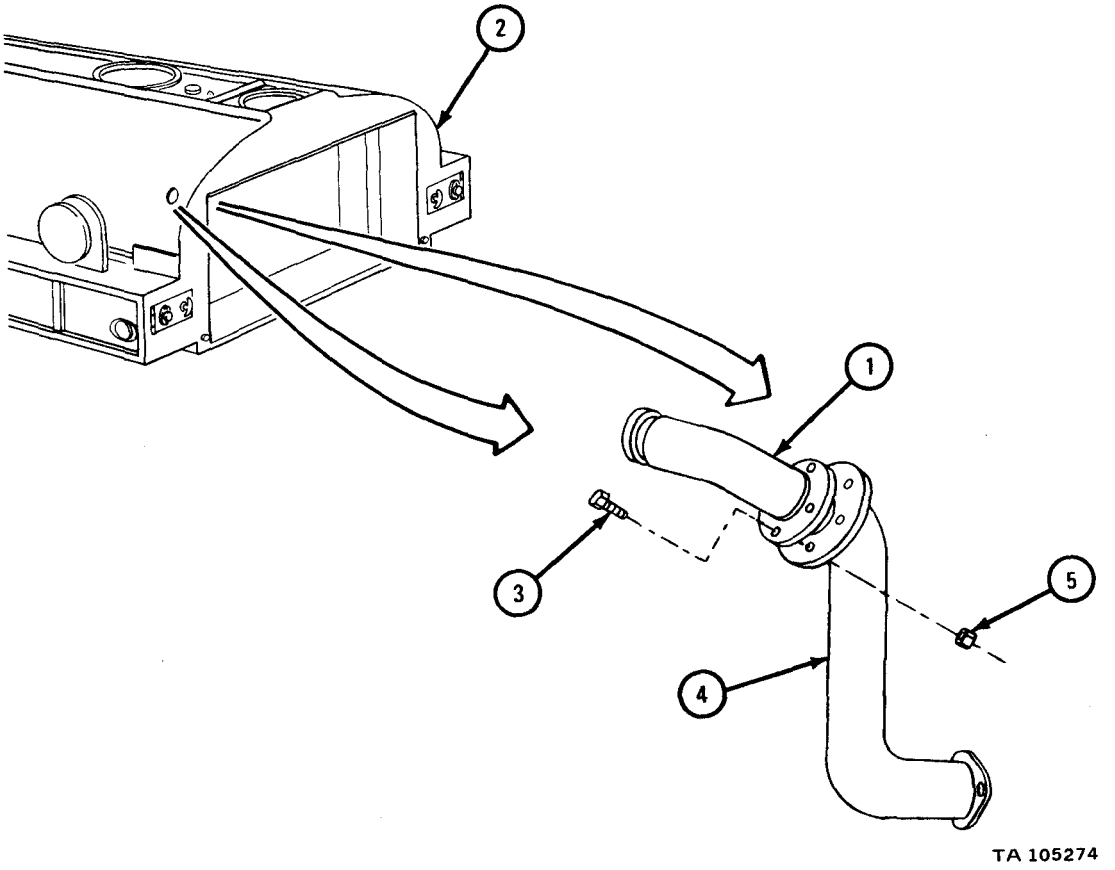

FRAME 9

Soldier A 1. Aline screw holes in nozzle bracket (1) with screw holes in tank body (2) and put in two screws (3). Hold two screws.

Soldier B 2. Put on two nuts (4).

Soldier A 3. Aline hose (5) to tube (6).

Soldier B 4. Screw on coupling nut (7).

Soldier A 5. Put nozzle (8) into nozzle bracket (1).

GO TO FRAME 10

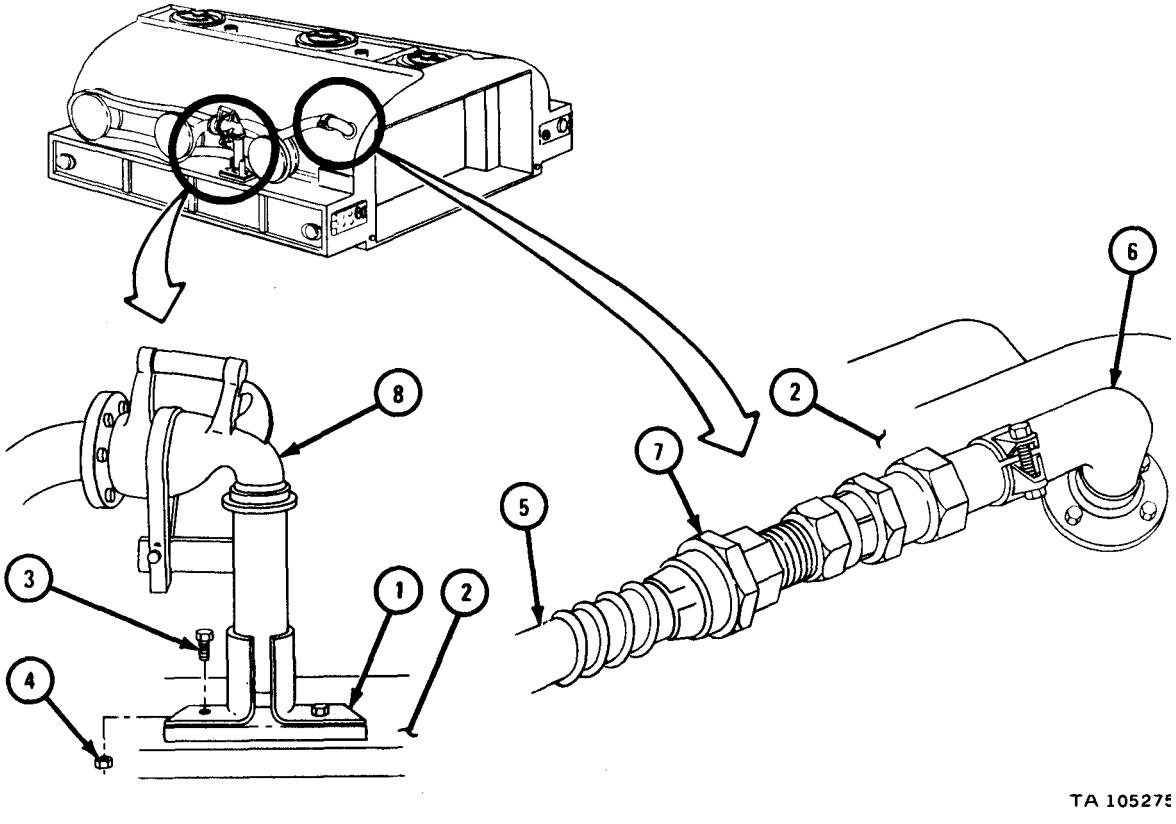

FRAME 10

Soldiers A and B 1. Put discharge tube (1) in place.

Soldier A 2. Hold discharge tube (1) in place.

Soldier B 3. Put in U-bolt (2) and put on two nuts (3).

4. Do step 3 again for three other U-bolts.

Soldiers A and B 5. Do steps 1 through 4 again for other discharge tube.

GO TO FRAME 11

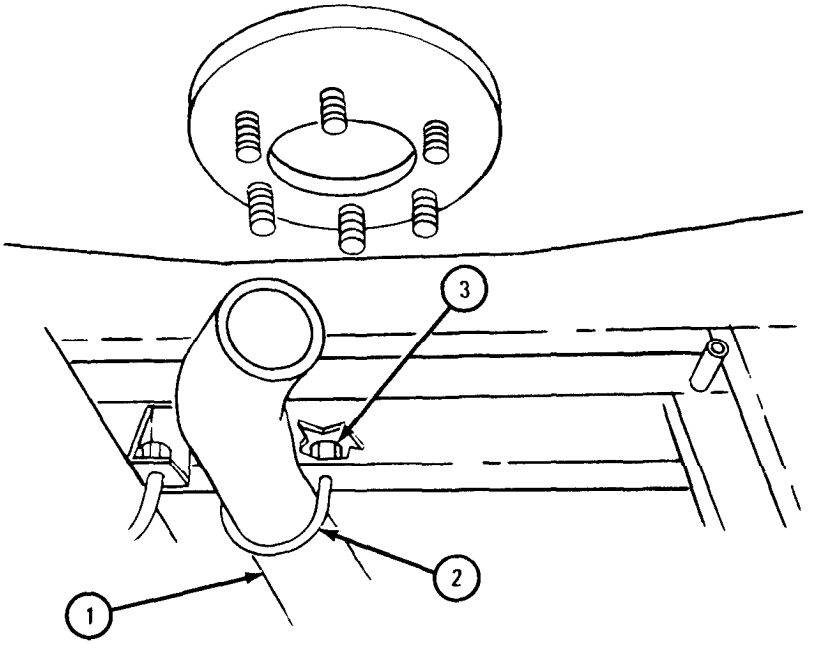

TA 105276

FRAME 11

Soldier A	1.	Aline screw holes in static reel (1) with screw holes in tank body (2) and put in two screws (3). Hold two screws.
Soldier B	2.	Put on two nuts (4).
Soldiers A and B	3.	Put in segregator stand (5).
Soldier A	4.	Put in four screws (6). Hold four screws.
Soldier B	5.	Put on four nuts (7).
Soldier A	6.	Put in two screws (8). Hold two screws.
Soldier B	7.	Put on two nuts (9).

GO TO FRAME 12

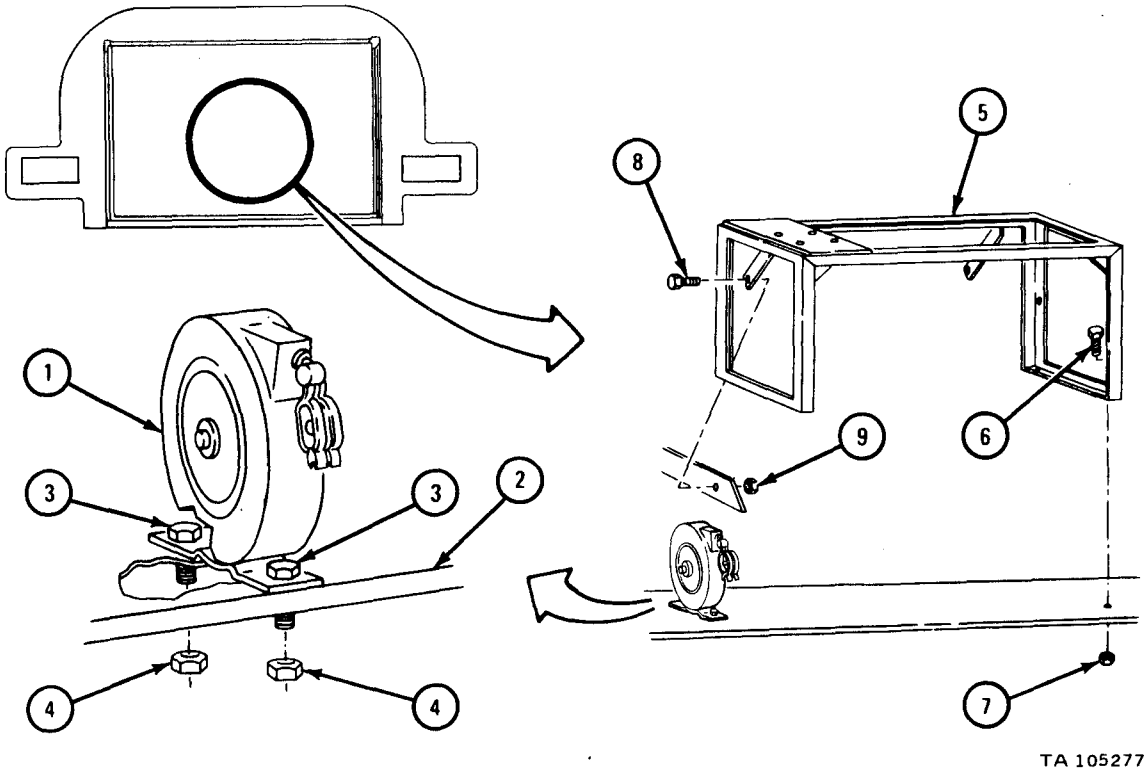

FRAME 12

Soldiers A and B 1. Put in sump assembly (1).

Soldier A 2. Hold sump assembly (1) in place.

Soldier B 3. Put in three screws (2) and put on three nuts (3).

4. Put in two pipes (4).

5. Put on two valves (5).

6. Put in two pipes (6).

GO TO FRAME 13

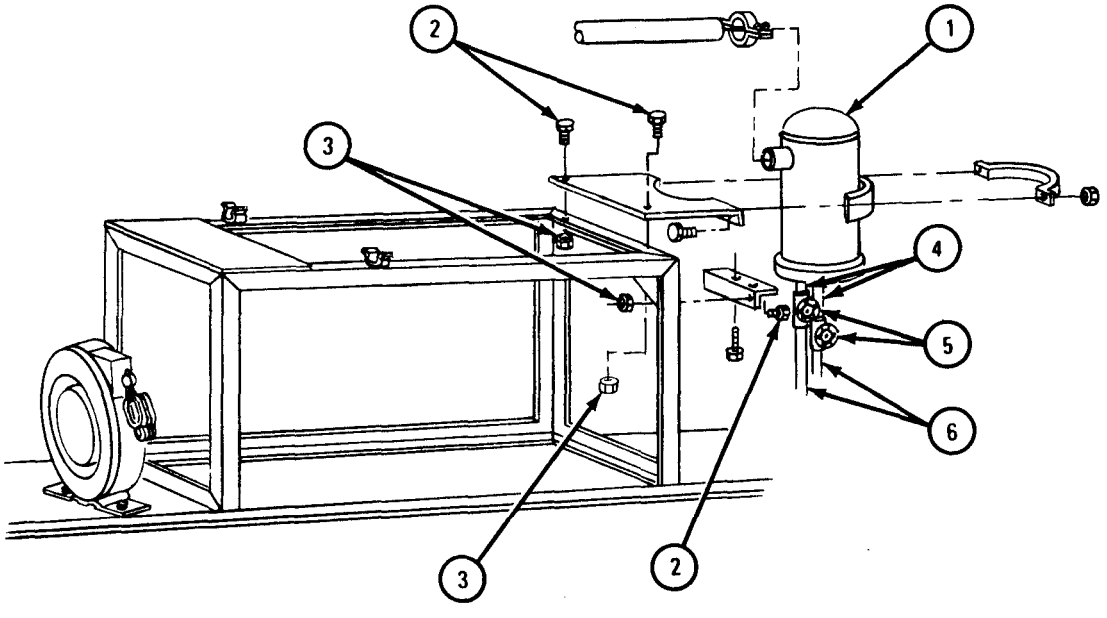

TA 105278

FRAME 13

Soldier A 1. Aline screw holes in gage assembly (1) with segregator stand (2) and put in two screws (3). Hold two screws.

Soldier B 2. Put on two nuts (4).

3. Put on three lines (5) and tighten three line nuts (6).

GO TO FRAME 14

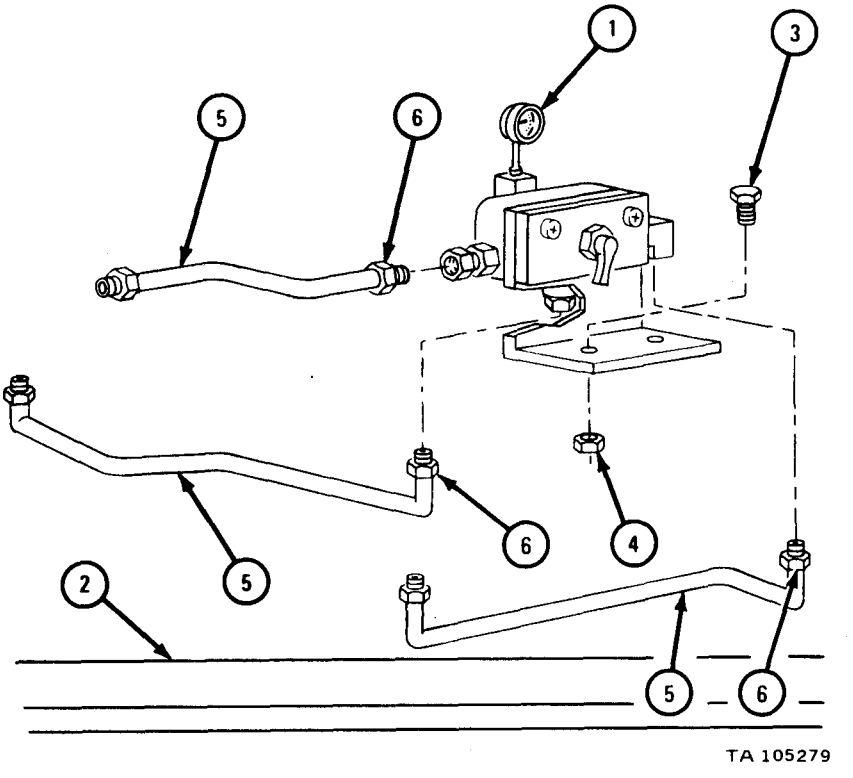

FRAME 14

Soldiers A and B 1. Put pump compartment door (1) in place.

Soldier A 2. Hold pump compartment door (1) in place.

Soldier B 3. Put in 10 screws (2) and put on 10 nuts (3).

4. Aline screw holes in door stop (4) with screw holes in tank body (5) and put in two screws (6). Hold two screws.

5. Put on two nuts (7).

Soldiers A and B 6. Do steps 1 through 5 again for other pump compartment door.

GO TO FRAME 15

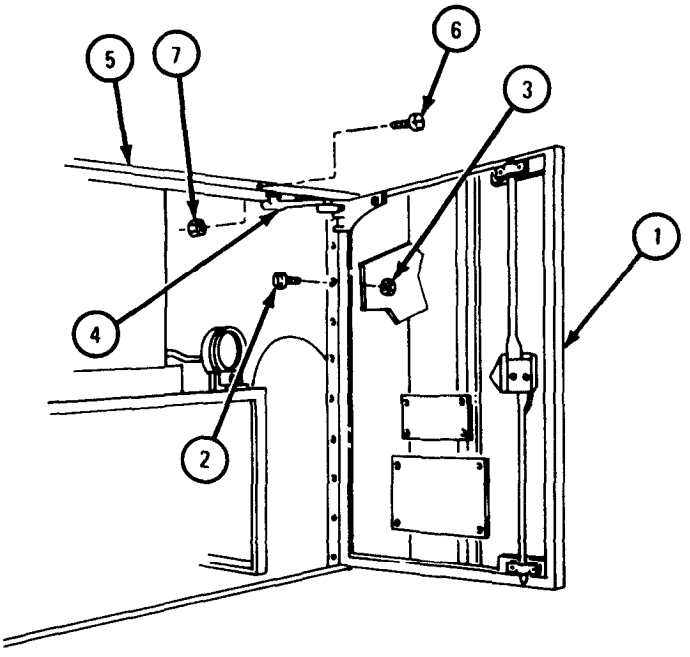

TA 105280

FRAME 15

NOTE

Follow-on Maintenance Action Required:

1. Put on water segregator tank. Refer to TM 9-2320-209-20.
2. Put on fuel delivery pump. Refer to TM 9-2320-209-20.
3. Put on gallon indicating meter. Refer to TM 9-2320-209-20.
4. Put on fuel drain manifold. Refer to TM 9-2320-209-20.
5. Put on gate valves. Refer to TM 9-2320-209-20.
6. Put on discharge valves. Refer to TM 9-2320-209-20.
7. Put on discharge valve operating lever. Refer to TM 9-2320-209-20.
8. Put on discharge valve cables. Refer to TM 9-2320-209-20.
9. Put on emergency valve release cable. Refer to TM 9-2320-209-20.
10. Put on pioneer tool bracket. Refer to para 17-59.
11. Put on splash shields. Refer to para 17-69.
12. Put on front propeller shaft. Refer to Propeller Shaft and Universal Joint Removal and Replacement, TM 9-2320-209-20.
13. Put on intermediate propeller shaft. Refer to Propeller Shaft and Universal Joint Removal and Replacement, TM 9-2320-209-20.
14. Put on rear propeller shaft. Refer to Propeller Shaft and Universal Joint Removal and Replacement, TM 9-2320-209-20.
15. Refill fueling holding compartments. Refer to TM 9-2320-209-20.

END OF TASK

17-29. GRAVITY DELIVERY LINE GATE VALVE REMOVAL, REPAIR, AND REPLACEMENT.

TOOLS: No special tools required

SUPPLIES: Gravity delivery line gate valve gasket
Manifold and gate valve gasket
Gland
Preformed packing (2)
Solvent, dry cleaning, type II (SD-2), Fed. Spec P-D-680

PERSONNEL: One

EQUIPMENT CONDITION: Truck parked, engine off, handbrake set.

a. Preliminary Procedure. Drain any liquid in tank. Refer to TM 9-2320-209-10.

b. Removal.

FRAME 1

NOTE

If working on fuel trucks M49A1C or M49A2C, go to frame 2.

1. Loosen gat valve (1) three turns.
2. Take off four self-locking nuts (2) and bolts (3).
3. Take gravity delivery line gate valve assembly (4) and gasket (5) off tube (6). Throw away gasket.

GO TO FRAME 2

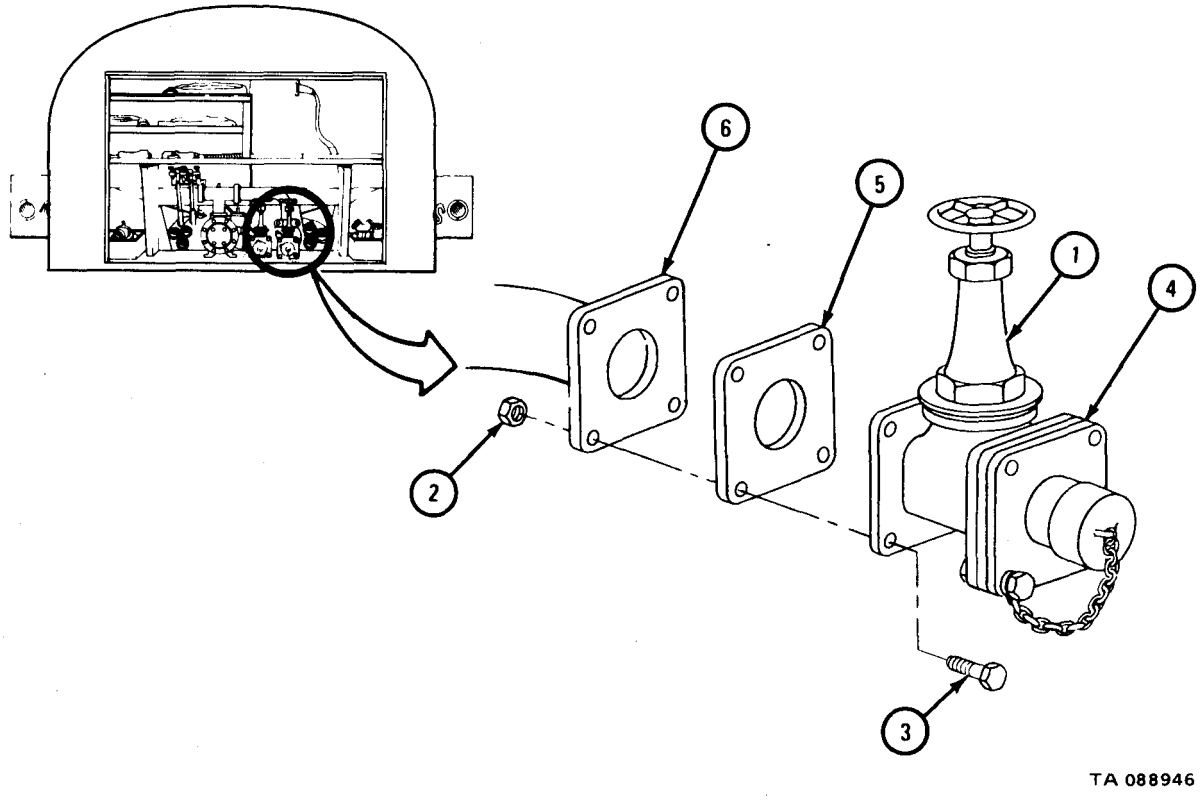

FRAME 2

WARNING

Smoking, sparks or open flame are not allowed within 50 feet of work area. Do not do this task inside a building. Fumes or fuel can explode, causing injury to personnel and damage to equipment.

1. Take off four self-locking nuts (1) and bolts (2).
2. Take gravity delivery line gate valve (3) and gasket (4) off tube (5). Throw away gasket.

END OF TASK

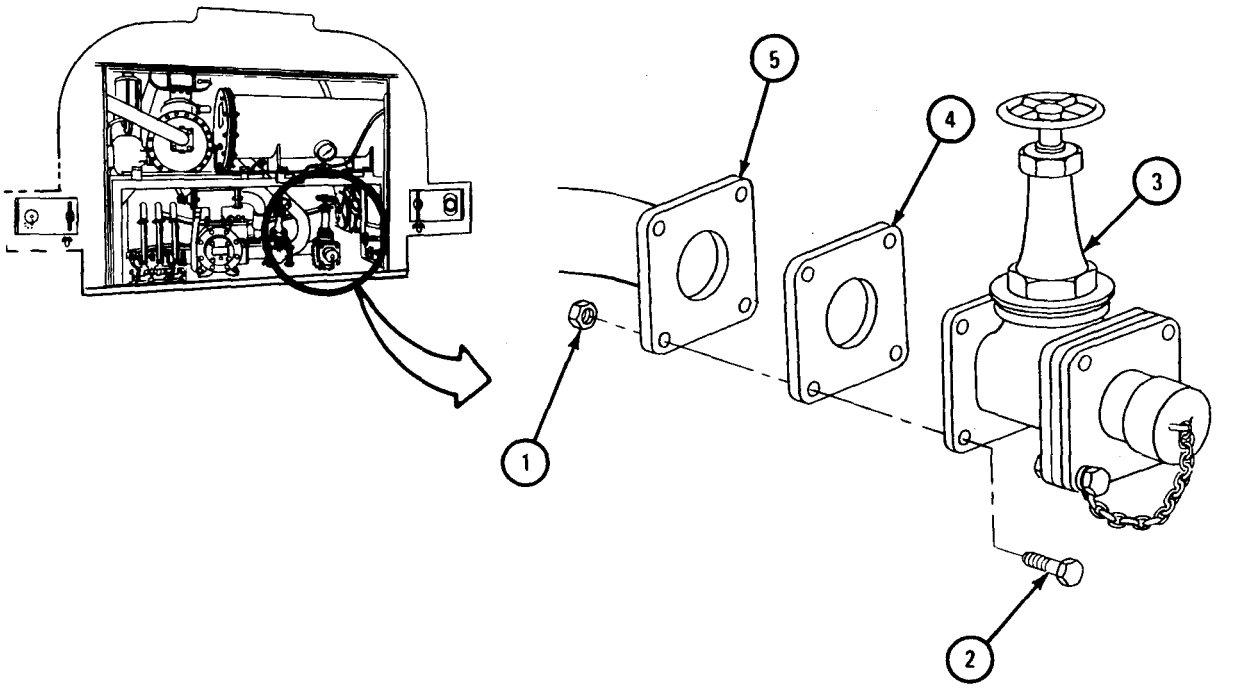

c. Disassembly.

FRAME 1

1. Put valve assembly (1) in vise. Take off four self-locking nuts (2) and bolts (3).
2. Take off cap assembly (4), flange (5), and gasket (6). Throw away gasket.

GO TO FRAME 2

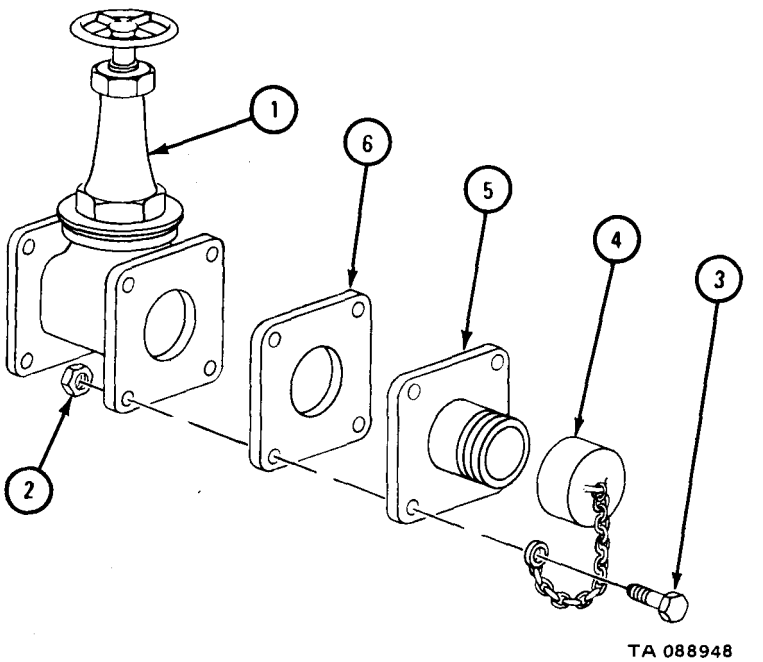

FRAME 2

1. Take off nut (1), hand wheel (2), and nut (3).
2. Take bonnet (4) off body (5).
3. Take gland (6) out of bonnet (4) and throw away gland.
4. Take out and throw away two preformed packings (7) from bonnet (4).

GO TO FRAME 3

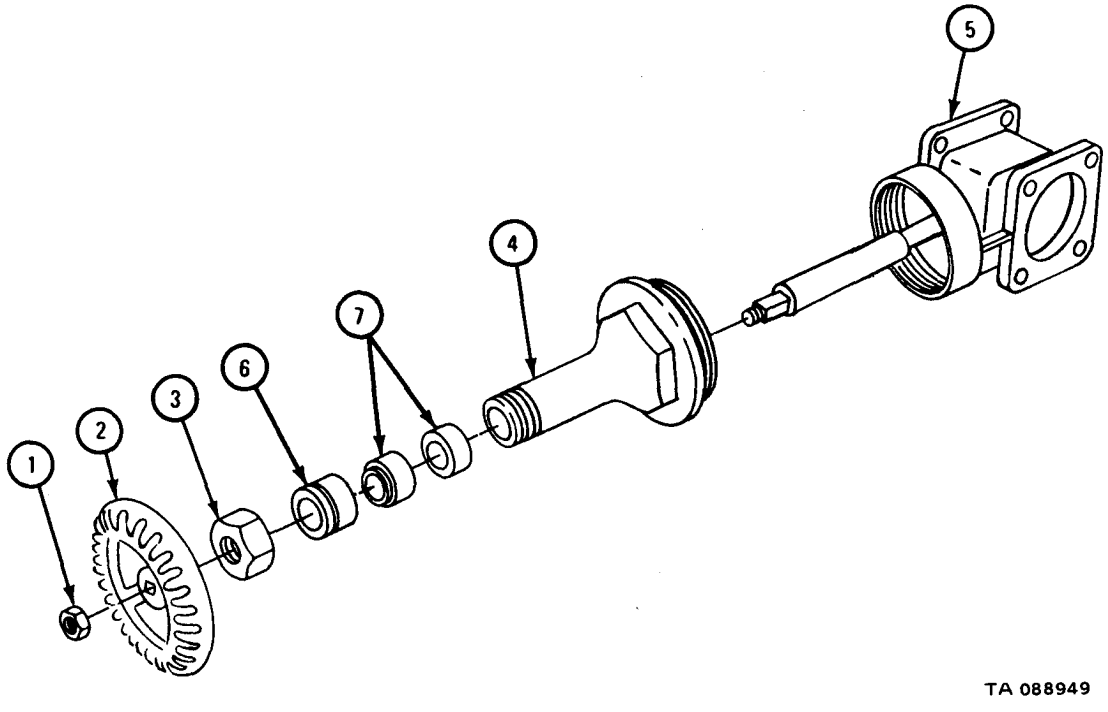

FRAME 3

1. Take stem (1) out of body (2).
2. Take two disks (3) off stem (1).

END OF TASK

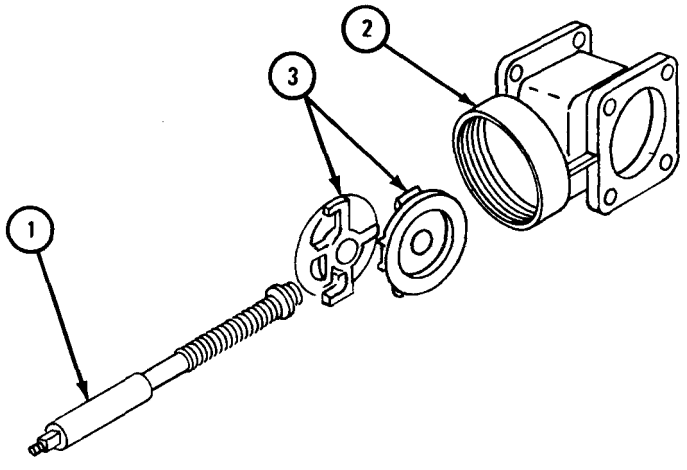

TA 088950

d. Cleaning. There are no special cleaning procedures needed. Refer to cleaning procedures given in Part 1, para 1-3.

NOTE

Clean all parts before inspection and before assembly.

e. Inspection and Repair.

FRAME 1

1. Check that bonnet (1), body (2), and two disks (3) have no cracks, damaged threads or other damage. Repair cracks by welding. Refer to TM 9-237. Rethread any damaged threads.
2. Check that two nuts (4), hand wheel (5), and stem (6) have no damaged threads or other damage. Rethread any damaged threads.
3. If parts need more repair, get new ones in their place.

END OF TASK

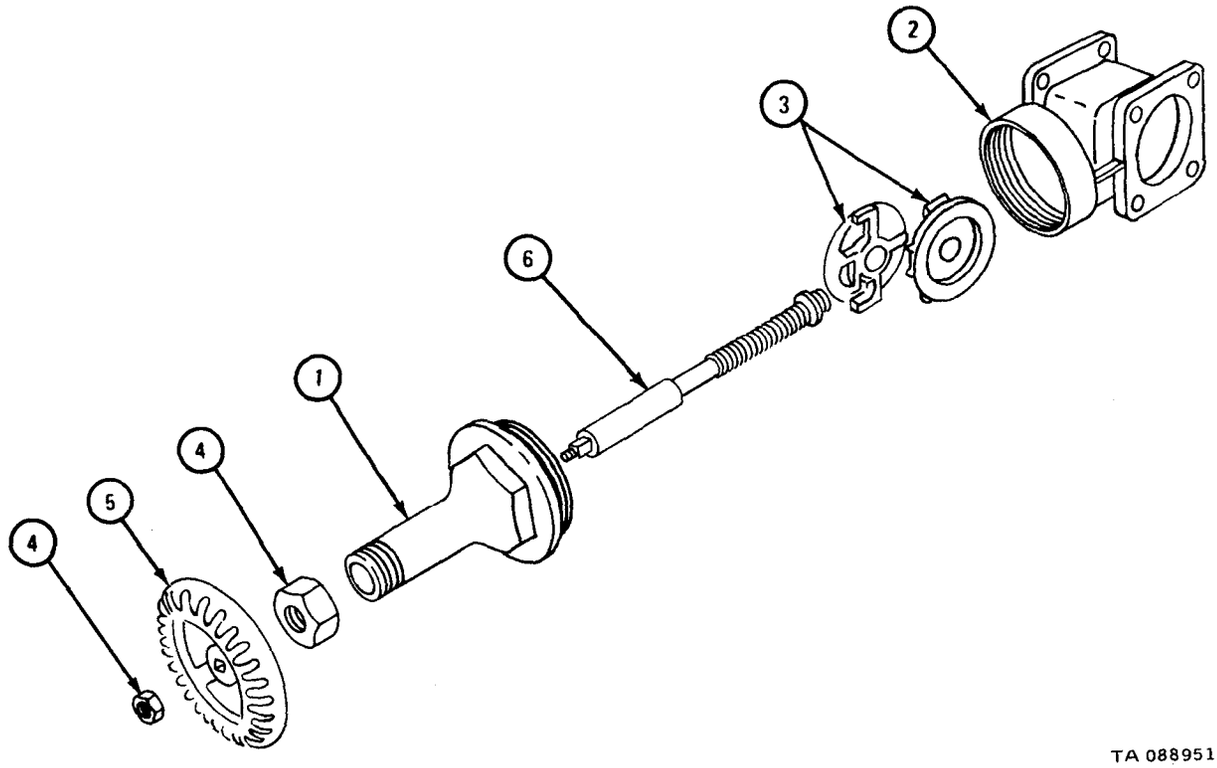

f. Assembly.

FRAME 1

1. Put two disks (1) on stem (2) and put stem in body (3).

GO TO FRAME 2

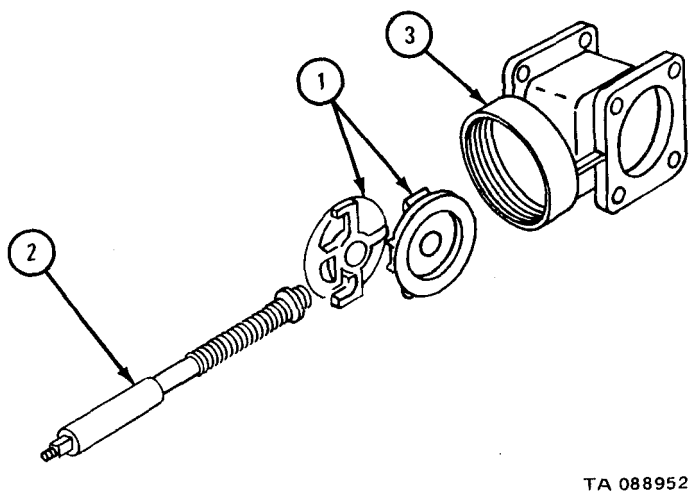

FRAME 2

1. Put body (1) in vise.
2. Screw bonnet (2) on stem (3) and into body (1).
3. Put two preformed packings (4) on stem (3).
4. Put gland (5) into bonnet (2).
5. Put nut (6) on bonnet (2) over stem (3).
6. Put hand wheel (7) and nut (8) on stem (3).

GO TO FRAME 3

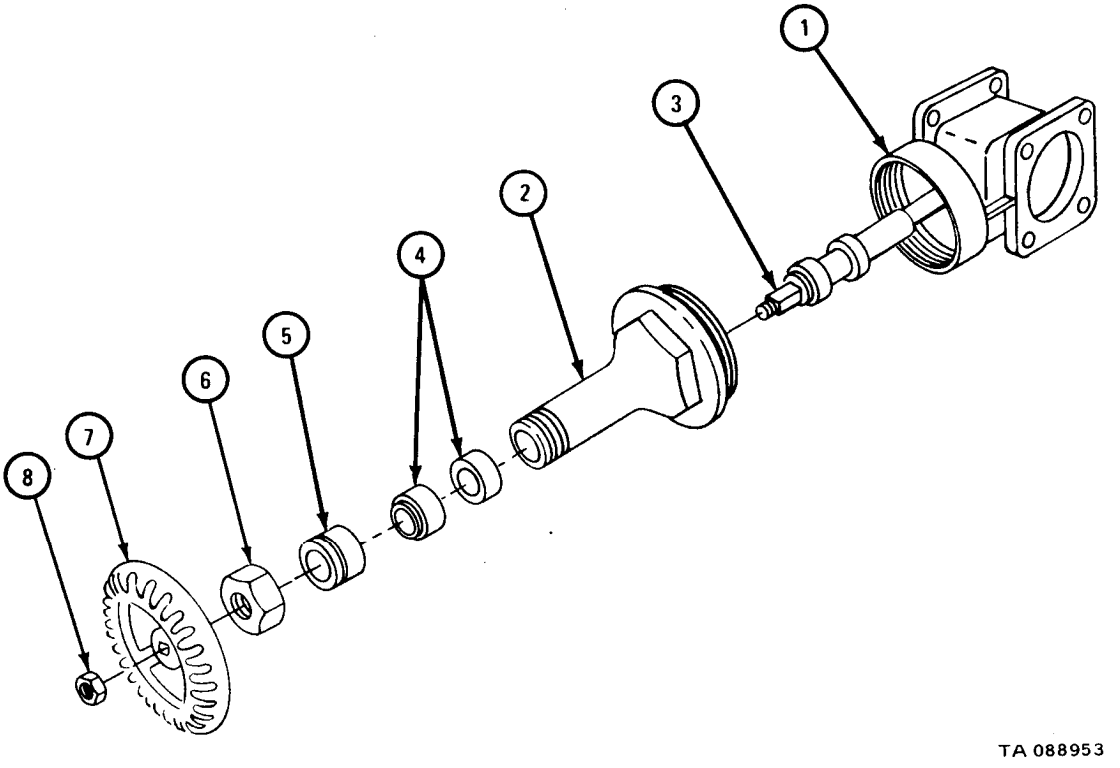

FRAME 3

1. Put gasket (1) between body (2) and flange (3) and put in three of four screws (4).
2. Put three of four self-locking nuts (5) on screws (4).
3. Put cap (6) on flange (3).
4. Put last screw (4) through end of chain (7), flange (3), and body (2).
5. Put last self-locking nut (5) on screw (4).

END OF TASK

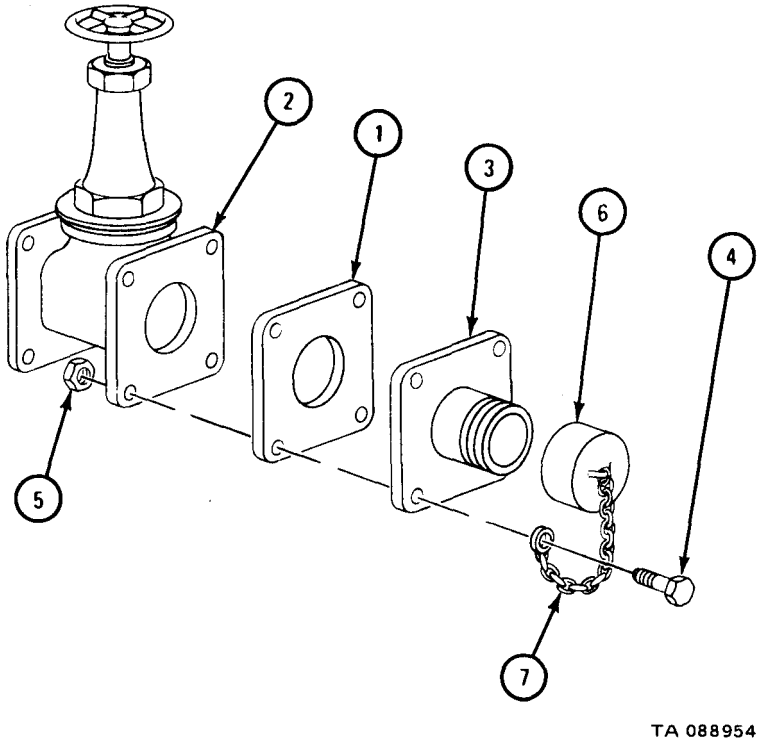

g. Replacement.

FRAME 1

WARNING

Smoking, sparks or open flame are not allowed within 50 feet of work area. Do not do this task inside a building. Fumes or fuel can explode, causing injury to personnel and damage to equipment.

NOTE

If working on fuel trucks M49A1C or M49A2C, go to frame 2.

1. Put gasket (1) between hose (2) and gravity delivery line gate valve (3) and put in four bolts (4).
2. Put four self-locking nuts (5) on bolts (4).

GO TO FRAME 2

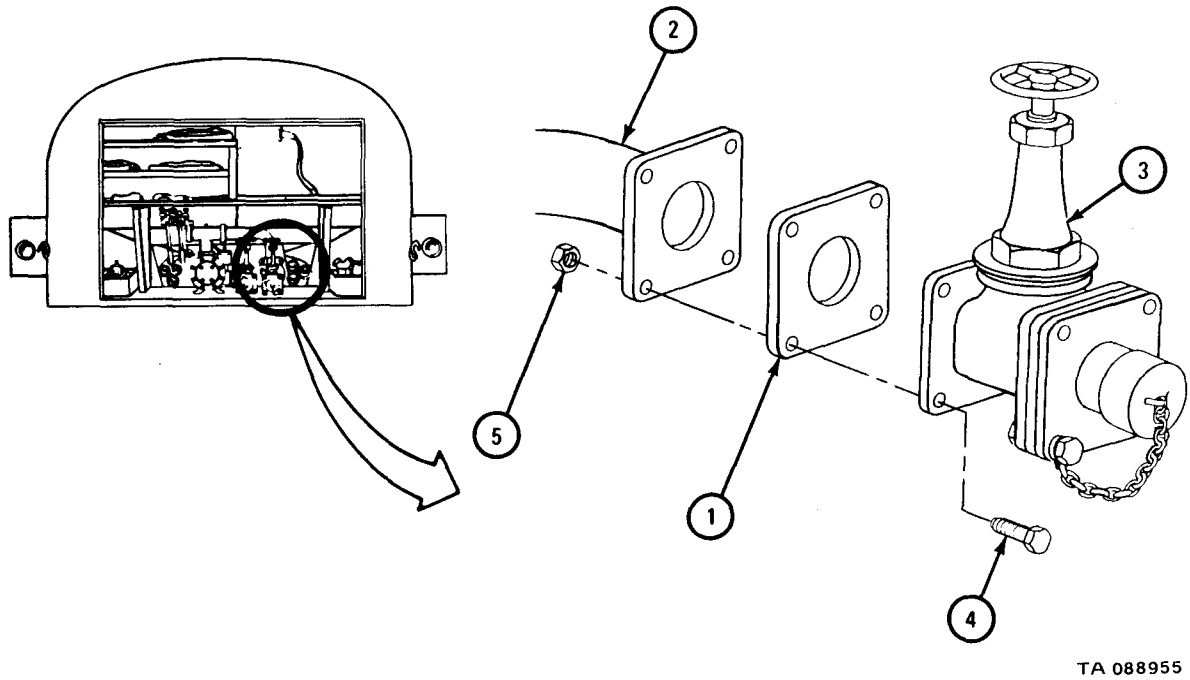

FRAME 2

WARNING

Smoking, sparks or open flame are not allowed within 50 feet of work area. Do not do this task inside a building. Fumes or fuel can explode, causing injury to personnel and damage to equipment.

1. Put gasket (1) between hose (2) and gravity delivery line gate valve (3) and put in four bolts (4).
2. Put four self-locking nuts (5) on bolts (4).

NOTE

Follow-on Maintenance Action Required:

If needed, fill tank. Refer to TM 9-2320-209-10.

END OF TASK

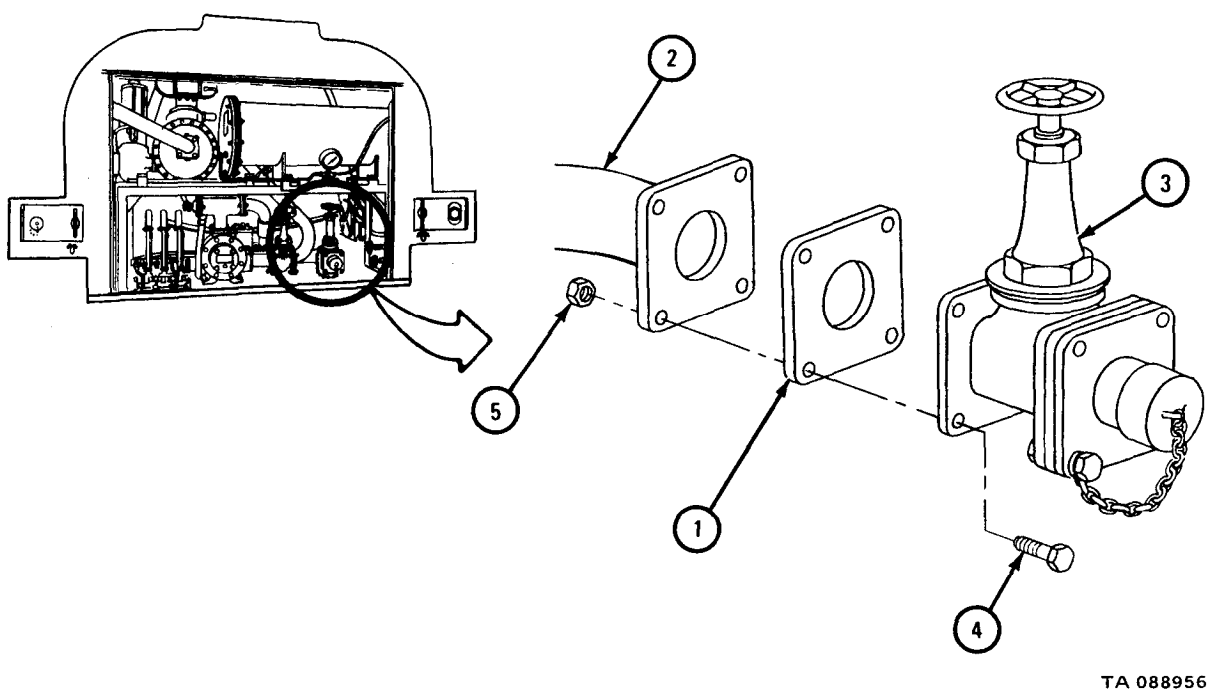

17-30. WATER TANK BODIES REMOVAL, REPAIR, AND REPLACEMENT (TRUCKS M50A1, M50A2, AND M50A3).

TOOLS : No special tools required

SUPPLIES : Gate valve gasket (4)
Clean rags
Manhold cover gasket (2)
Coating kit

PERSONNEL : Two

EQUIPMENT CONDITION: Truck parked, engine off, handbrake set.

a. Preliminary Procedures.

(1) Drain all water from holding compartments. Refer to TM 9-2320-209-10.

(2) Remove splash shields. Refer to para 17-69.

(3) Remove delivery pump and drive shaft with universal joint. Refer to TM 9-2320-209-20.

(4) Remove exhuast bypass fording valve. Refer to Part 1, para 5-3.

(5) Take water discharge hose, water dispenser nozzle, water suction hose, Y coupling, and water suction strainer out of water tank body. Refer to TM 9-2320-209-10.

(6) Remove pioneer tool rack. Refer to para 17-59.

b. Removal.

FRAME 1

1. Take off two nuts (1) and washers (2).
2. Take out two bolts (3) , washers (4) , and four springs (5) from front hold down mount (6).
3. Take off two nuts (7) and take out two bolts (8) from middle and rear hold down mounts (9) .
4. Do steps 1, 2, and 3 again on right side of truck.

GO TO FRAME 2

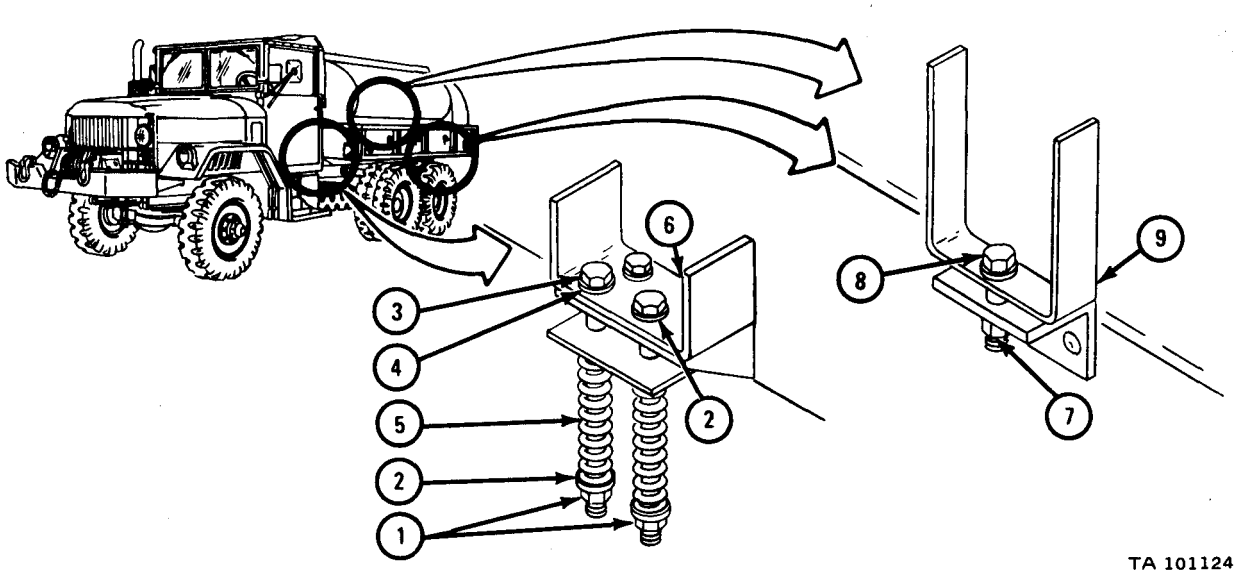

FRAME 2

WARNING

Water tank body (1) is heavy and bulky. Make sure that there is enough clearance around and over truck before lifting unit. This will stop damage to equipment and injury to personnel.

Soldier A 1. Set up wood blocks to hold water tank body (1) when it is taken off truck.

2. Guide water tank body (1) off truck and onto wood blocks when soldier B lifts it.

Soldier B 3. Using hoist, 9,000 pound minimum capacity, lift water tank body (1) off truck and move it onto wood blocks.

END OF TASK

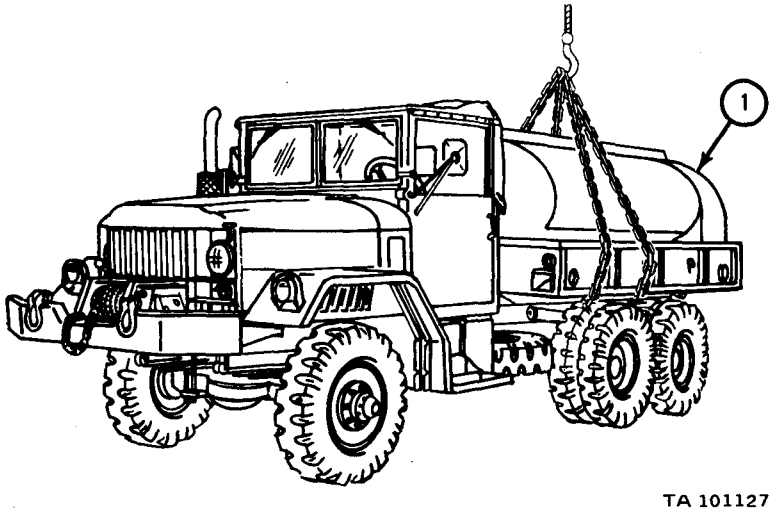

c. Disassembly.

NOTE

If working on trucks M50A1 or M50A2, start with Frame 1.
If working on truck M50A3, go to Frame 4.

FRAME 1

1. Take off padlock (1).
2. Unlatch handle (2) and pull up yoke (3).
3. Take out and throw away cotter pin (4).
4. Slide out pin (5) and move yoke (3) out of the way.
5. Take off manhole cover (6).
6. Take off and throw away gasket (7).
7. Do steps 1 through 6 again for other manhole cover (6).

GO TO FRAME 2

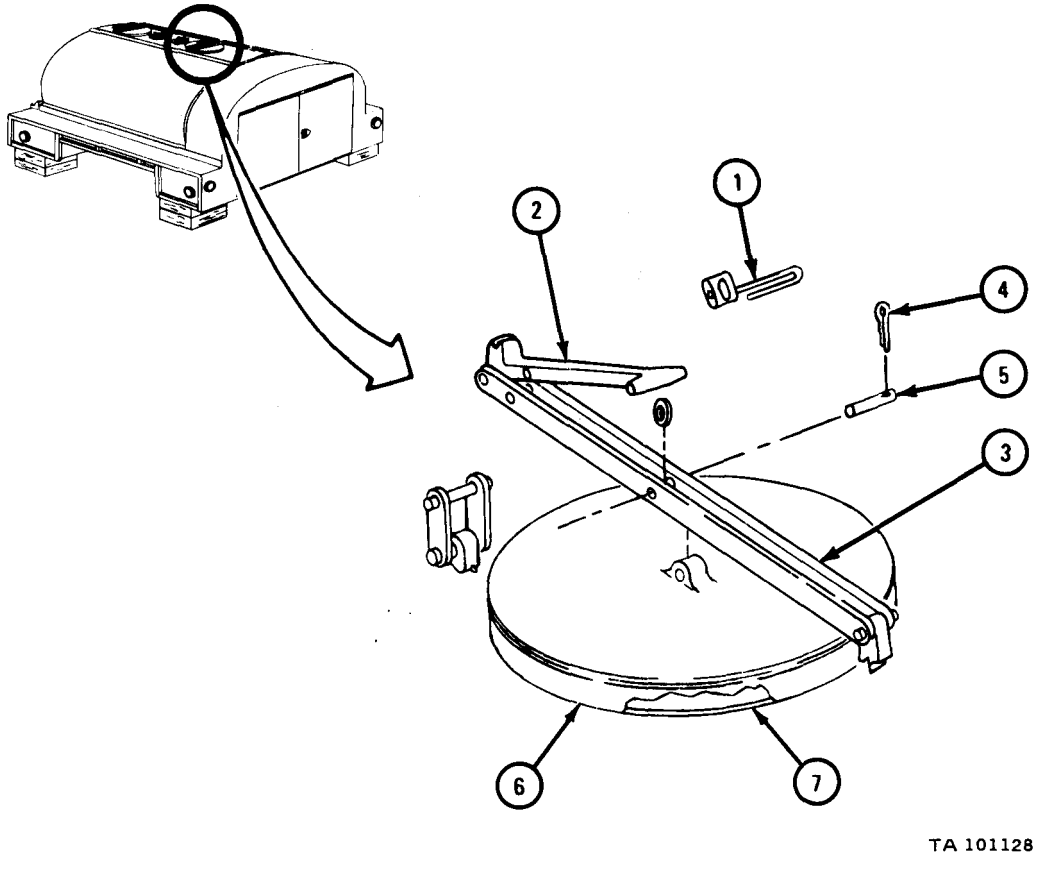

FRAME 2

1. Take out and throw away two cotter pins (1). Slide out pins (2).

NOTE

Inner manhole cover (3) may need to be turned left or right before pulling it all the way out.

2. Grab yoke (4) and pull out cover (3).
3. Pull out rubber seal (5).

GO TO FRAME 3

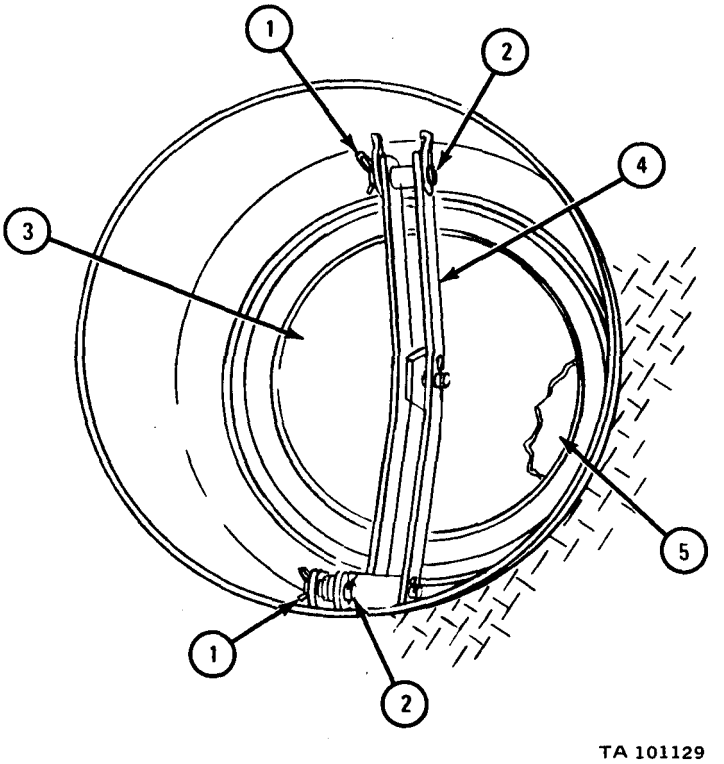

FRAME 3

1. Take out and throw away three cotter pins (1).
2. Take out three pins (2) and nut (3).
3. Take out and throw away cotter pin (4).
4. Take out pin (5) and five spacer washers (6).
5. Take off two parts of yoke (7).
6. Take off cover (8).
7. Take off and throw away gasket (9).
8. Do steps 1 through 6 again for other inner manhole cover (8).

GO TO FRAME 4

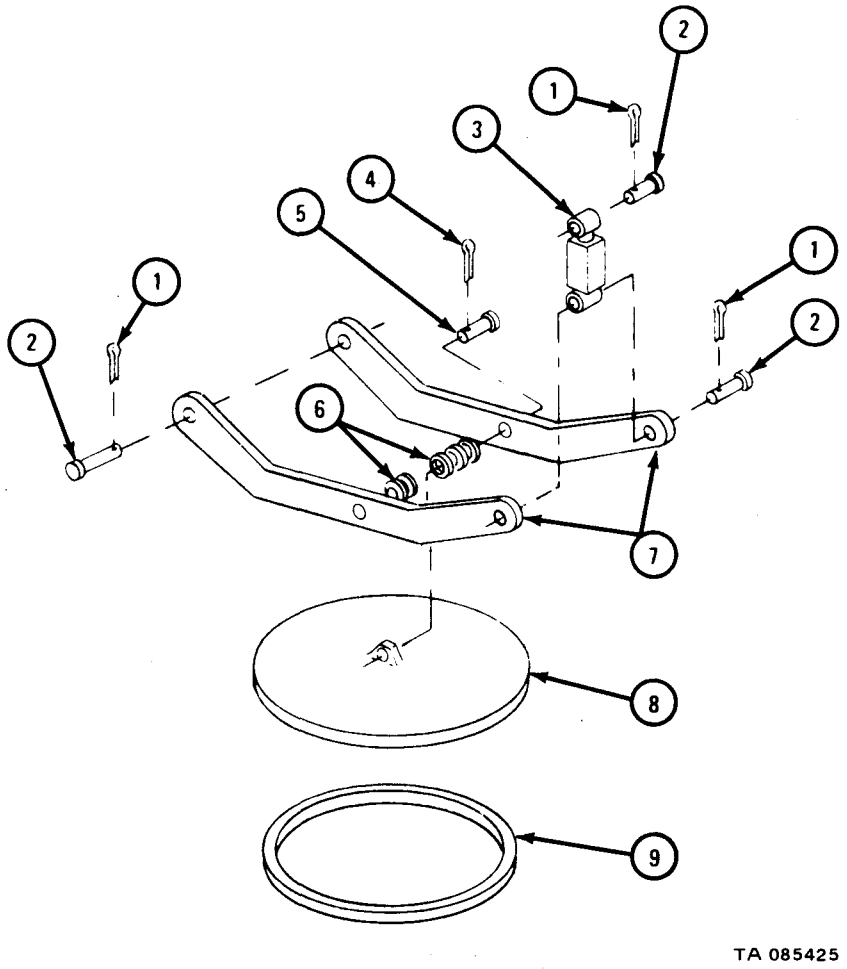

FRAME 4

1. Unlatch filler cover (1).
2. Take out cotter pin (2) and pin (3). Throw away cotter pin.
3. Take off cover (1).
4. Take out six screws (4) and washers (5).
5. Take off filter pipe (6) and filler pipe (7) with gasket (8).
6. Do steps 1 through 5 again for other filler cover (1).

GO TO FRAME 7

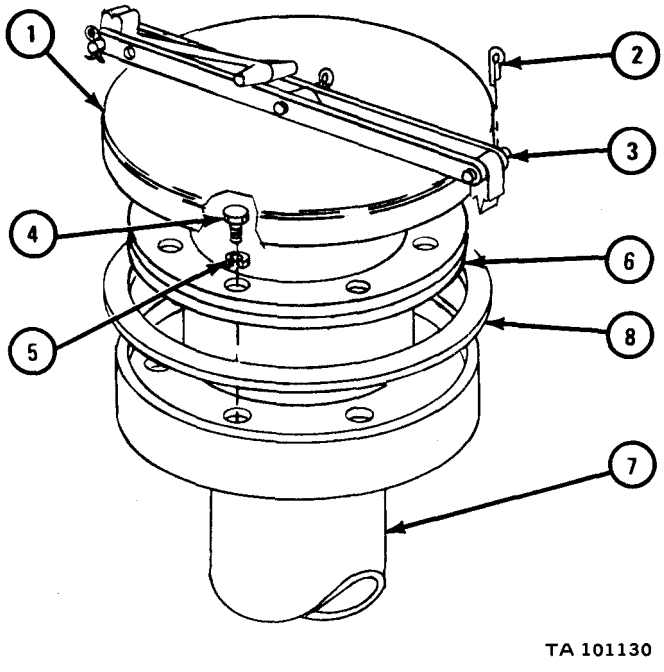

FRAME 5

1. Take off padlock (1).
2. Take off nut (2) and washer (3).
3. Take out bolt (4).
4. Spread and take off clamp ring (5).
5. Lift off manhole cover (6).
6. Do steps l through 5 again for other manhole cover (6).

GO TO FRAME 6

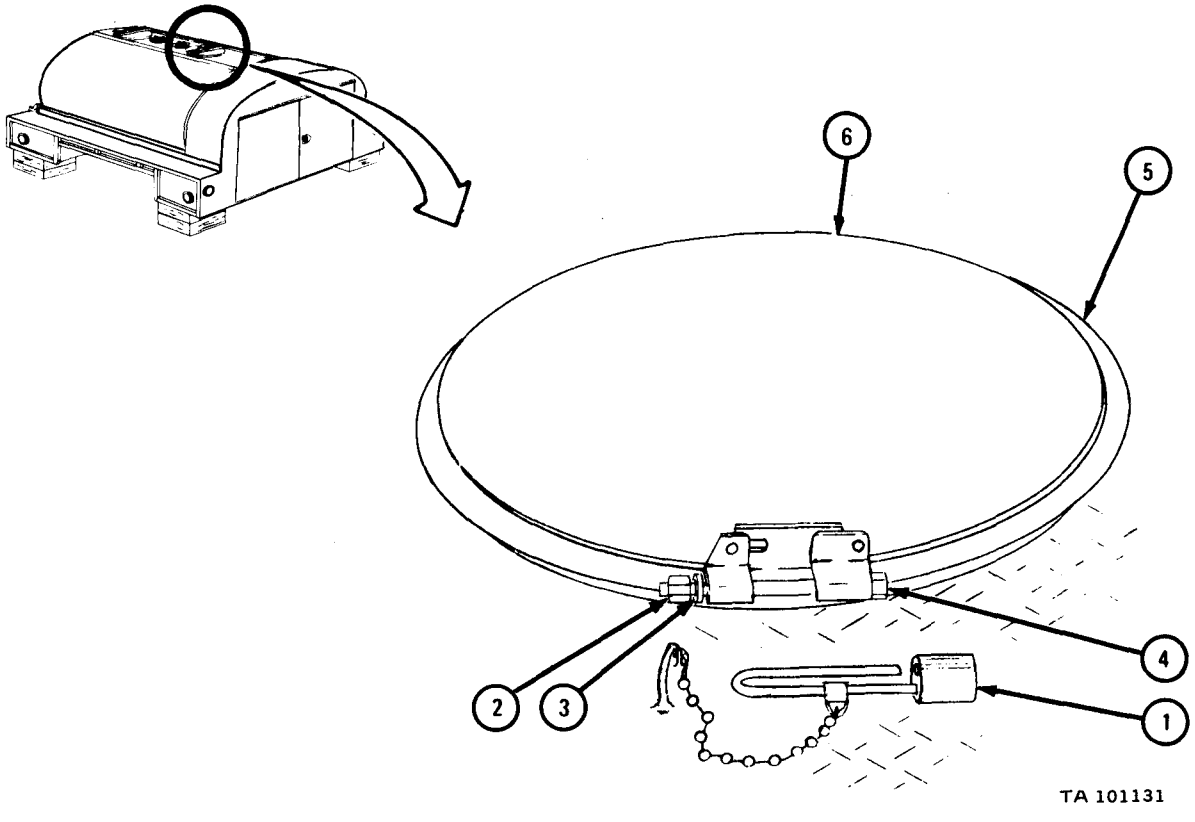

FRAME 6

1. Take off padlock (1).
2. Unlatch filler handle (2) and raise filler cover (3).
3. Lift out filter screen (4).
4. Take off four self-locking nuts (5) and lift out filter retainer (6).
5. Do steps 1 through 4 again for other filler cover.

GO TO FRAME 7

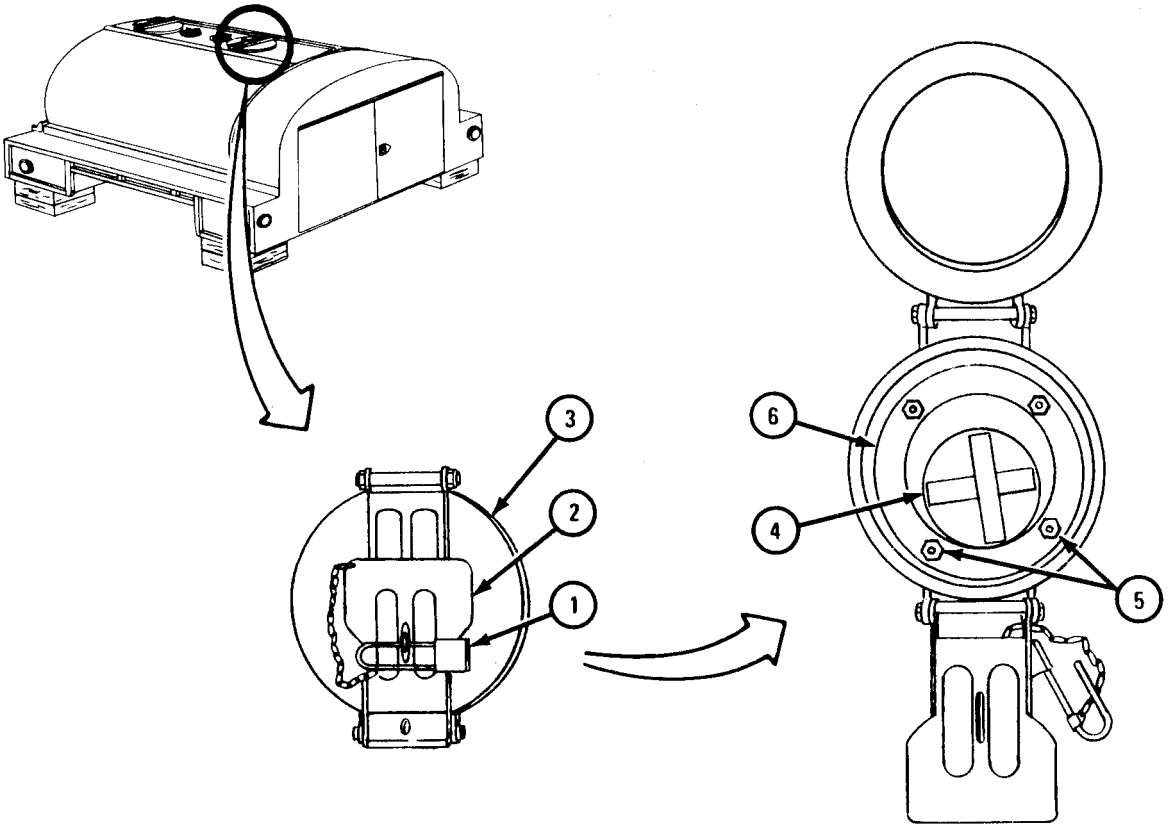

TA 105670

FRAME 7

1. Take out four screws (1) and nuts (2) from flange(3) on rear of line gate valve (4).
2. Take off gate valve (4) and gasket (5). Throw away gasket.
3. Do steps 1 and 2 again for other line gate valve (4).
4. Take off delivery pump assembly. Refer to TM 9-2320-209-20.

END OF TASK

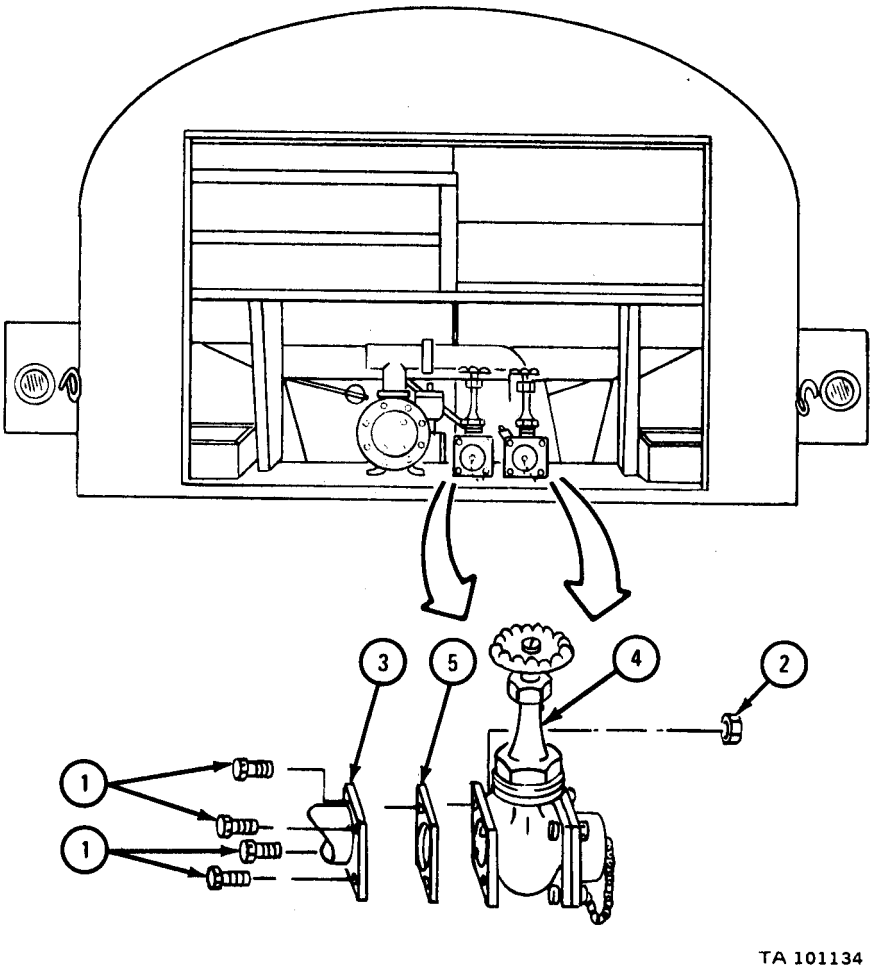

d. Cleaning.

(1) Steam clean water tank body. Refer to TM 9-247.

NOTE

Do not just drop the hose down a manhole. Steam must be guided to clean water tank body.

(2) Put steam nozzle in manhole and thoroughly clean each compartment. Blow steam through openings in baffles and check that all sections of each compartment are reached.

(3) Check that pump compartment has no fluid.

(4) By hand, clean out all sludge or scale in bottom of tank. Rinse inside of tank body with fresh water.

(5) Clean outside of tank body with soap and water. Use steam to take off heavy grease or dirt. Rinse water tank body with cold water.

e. Inspection and Repair.

FRAME 1

1. Seal all openings in water tank body holding compartment (1). Put air pressure of three pounds per square inch on inside of tank body.
2. Spread soapy water on outside of water tank body (2). Bubbles will show leak points. Mark leak points, if any, for repair.
3. Do steps 1 and 2 again for other water tank body holding compartment (3).

GO TO FRAME 2

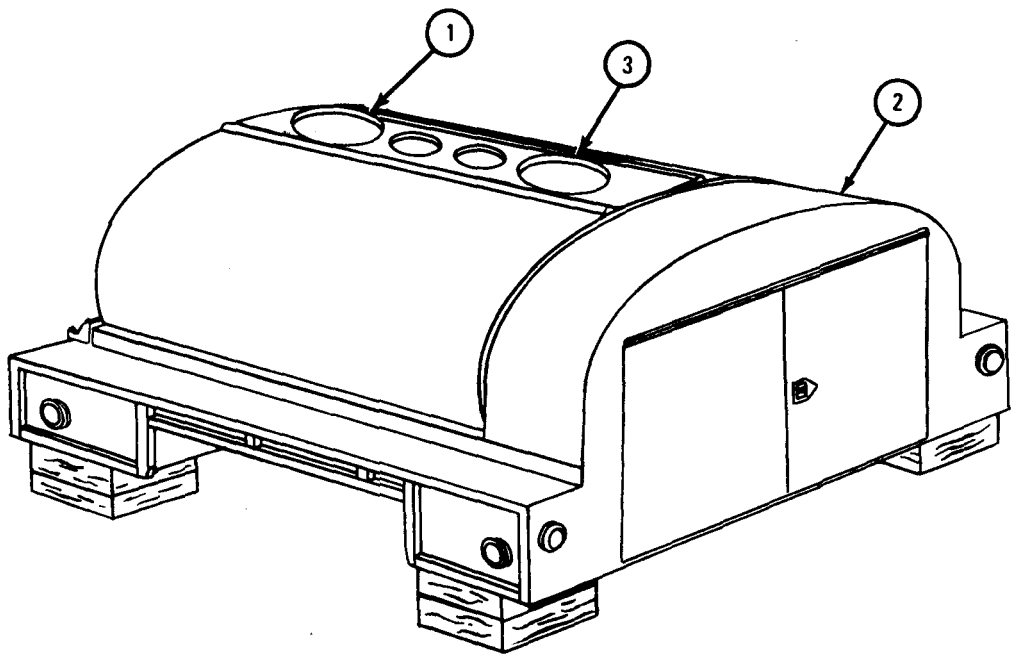

TA 101135

FRAME 2

1. Check that body (1) and bulkhead (2) have no corrosion, cracks, bends, breaks or tears. Straighten bent or buckled parts. Refer to TM 10-450. Weld parts that are corroded, cracked, broken, torn or marked for repair. Refer to TM 9-237.
2. Check that two filler covers (3) and two manhole covers (4) have no damage or wear. If part is damaged, get a new one.
3. Coat interior of water holding tanks. Refer to instructions in coating kit.

END OF TASK

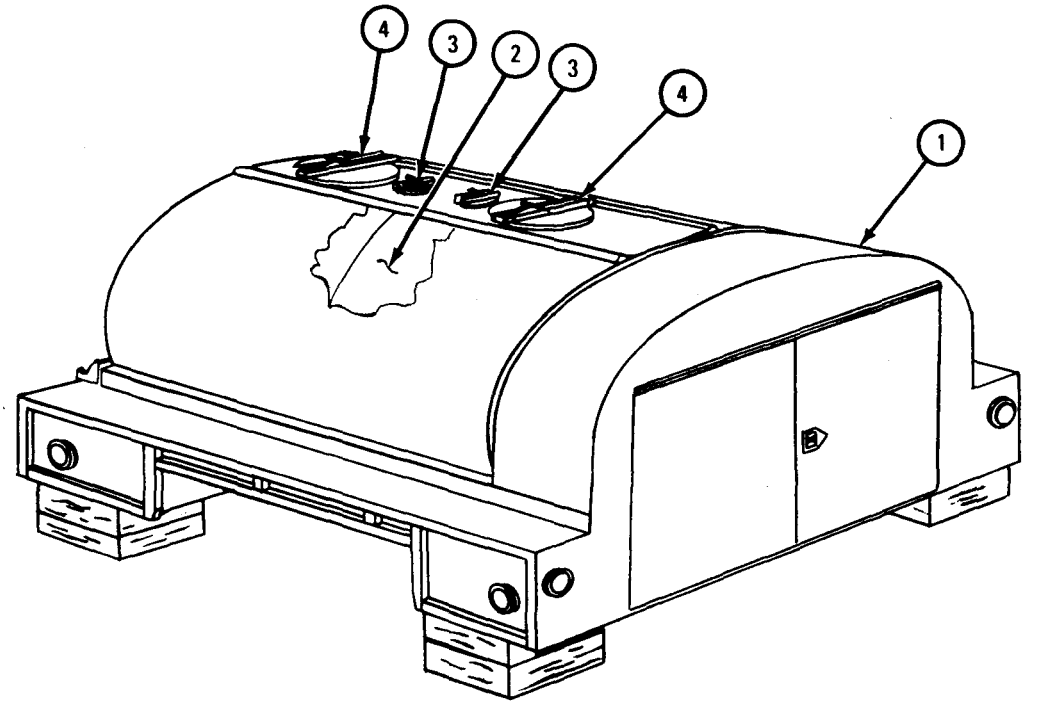

TA 101136

f. Assembly.

FRAME 1

1. Replace delivery pump assembly. Refer to TM 9-2320-209-20.
2. Put gasket (1) between flange (2) and line gate valve (3).
3. Put in four screws (4) and put on four nuts (5).
4. Do steps 2 and 3 again for other line gate valve (3).

GO TO FRAME 2

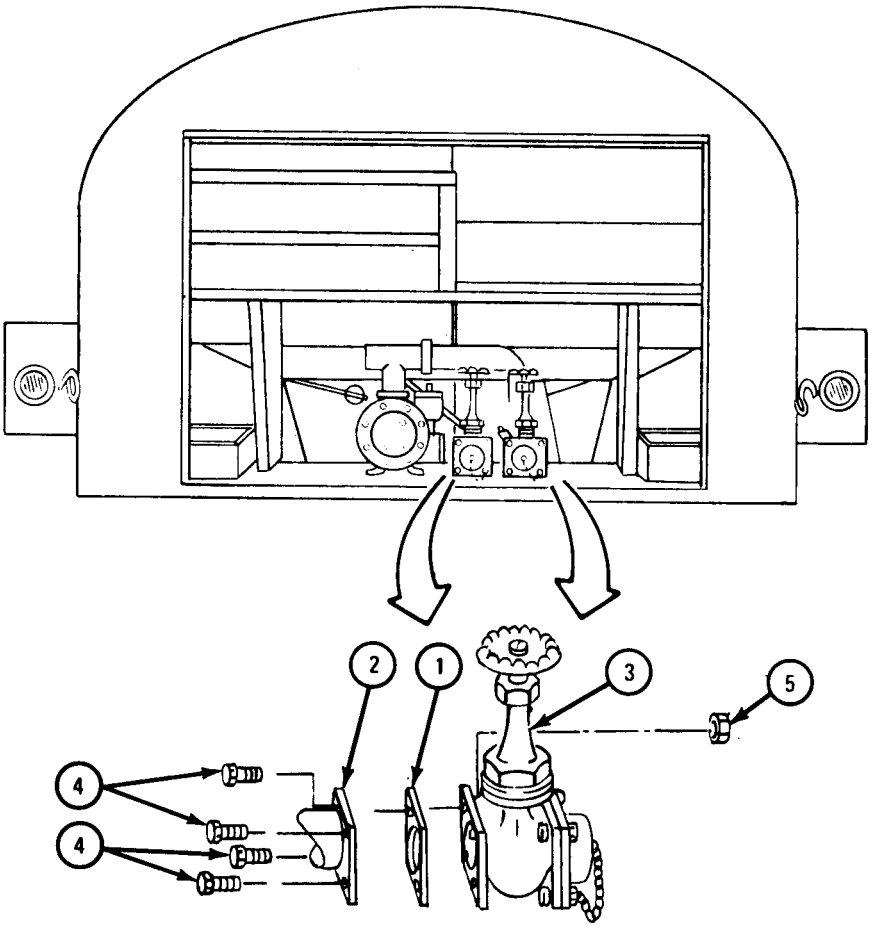

TA 101137

FRAME 2

NOTE

If working on trucks M50A1 or M50A2, do this frame. If working on truck M50A3, go to frame 5.

1. Put in filler pipe (1). Put gasket (2) inside filler pipe.
2. Put in filler pipe (3) and aline it with filler pipe (1).
3. Put in six screws (4) with washers (5).
4. Put on filler cover (6) and put in pin (7).
5. Put in cotter pin (8).
6. Do steps 1 through 5 again for other filler pipe (1).

GO TO FRAME 3

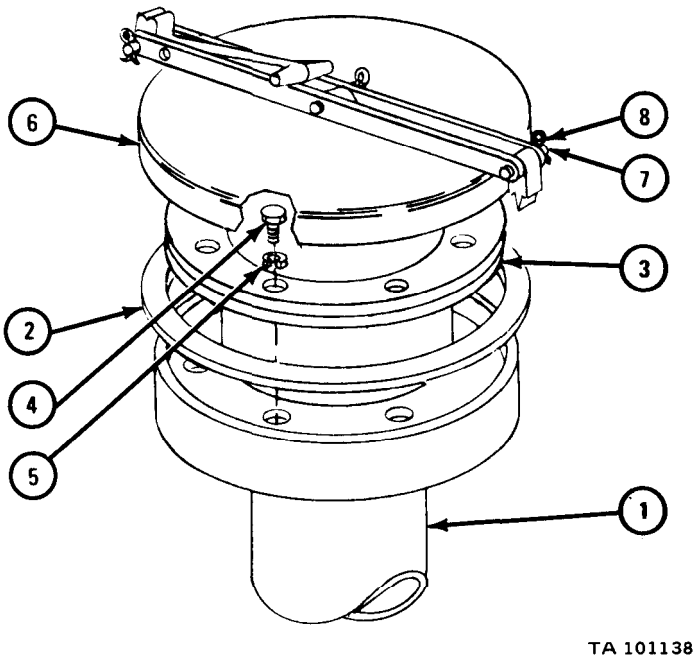

FRAME 3

1. Put pin (1) through center hole of one yoke half (2) and put three spacer washers (3) on pin.
2. Put pin (1) through hole in cover (4).
3. Put two spacer washers (3) on pin (1).
4. Put other yoke half (2) on pin (3) with pin through center hole of yoke half.
5. Put cotter pin (5) through pin (3).
6. Aline holes in eyebolts (6) with yoke halves (2) and truck.
7. Put two pins (7) through eyebolts (6).
8. Put pin (8) through yoke halves (2).
9. Put three cotter pins (9) through three pins (7 and 8).
10. Put gasket (10) in place and close inner manhole cover (4).
11. Do steps 1 through 10 for other manhole cover.

GO TO FRAME 4

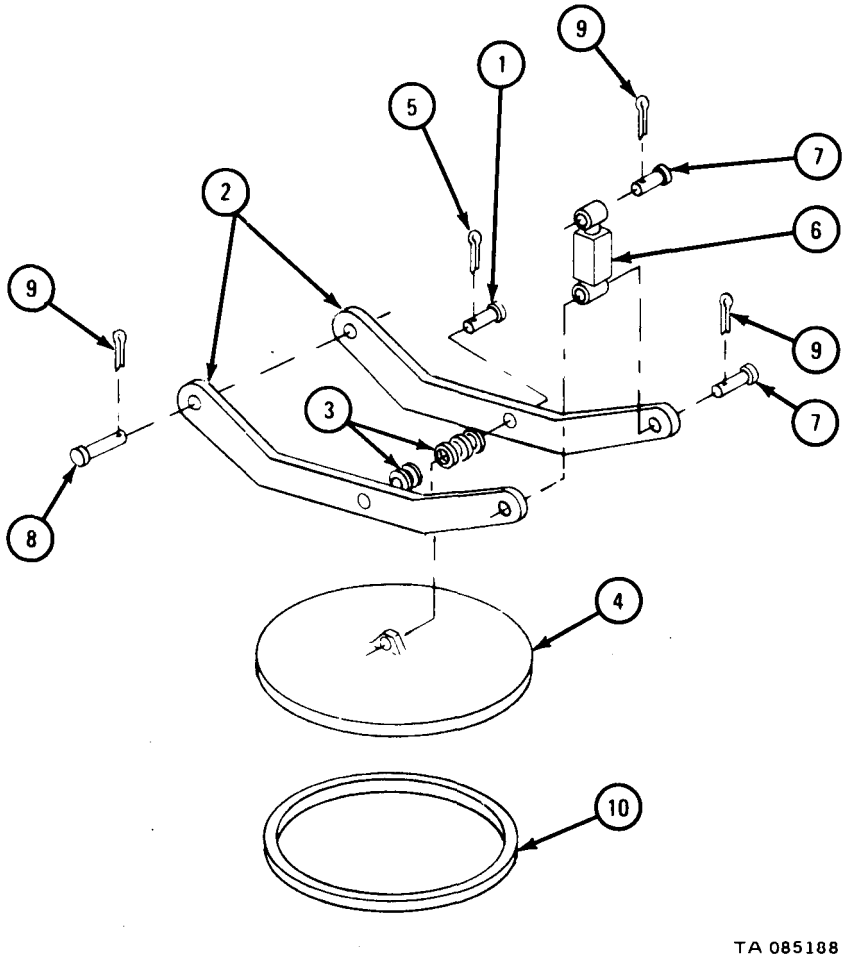

FRAME 4

NOTE

Be sure area around manhole opening is clean before putting on cover (1).

1. Place outer manhole cover (1) with gasket (2) over manhole opening.
2. Swing yoke (3) down over cover (1).
3. Aline center holes in yoke (3) with hole in top of cover (1).
4. Push in pin (4).
5. Put cotter pin (5).
6. Lock handle (6) in hinge (7).
7. Put padlock (8) through hole in handle (6) and yoke (3). Lock padlock.
8. Do steps 1 through 8 again for other manhole cover (1).

GO TO FRAME 5

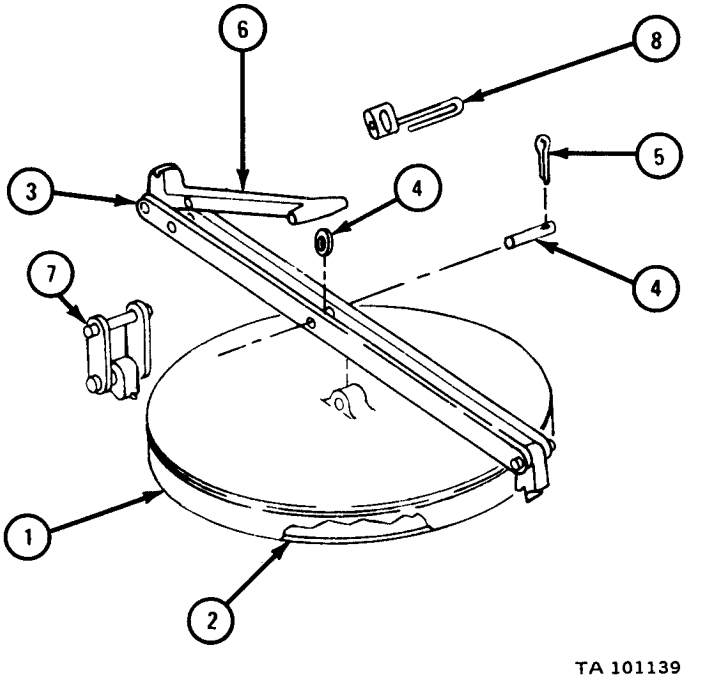

FRAME 5

1. Put in filter retainer (1) and put on four self-locking nuts (2).
2. Put in filter screen (3).
3. Close filler cover (4) and latch handle (5).
4. Put on padlock (6).
5. Do steps 1 through 4 again for other filler cover.

END OF TASK

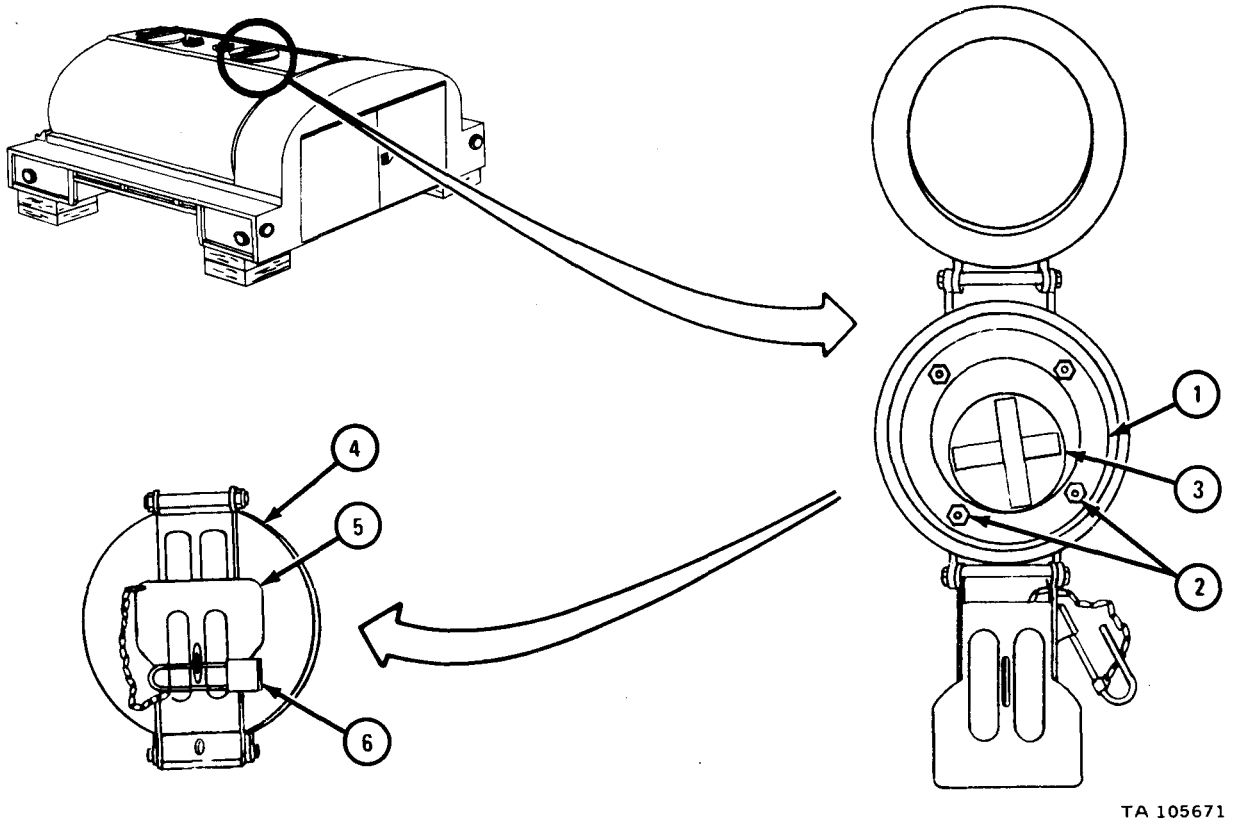

g. Replacement.

FRAME 1

WARNING

Water tank body (1) is heavy and bulky. Make sure that there is enough clearance around and over truck before lifting unit. This will stop damage to equipment and injury to personnel.

Soldier A 1. Guide water tank body (1) off wood blocks and onto truck when soldier B lifts it.

Soldier B 2. Using hoist, 9,000 minimum capacity, lift water tank body (1)

GO TO FRAME 2

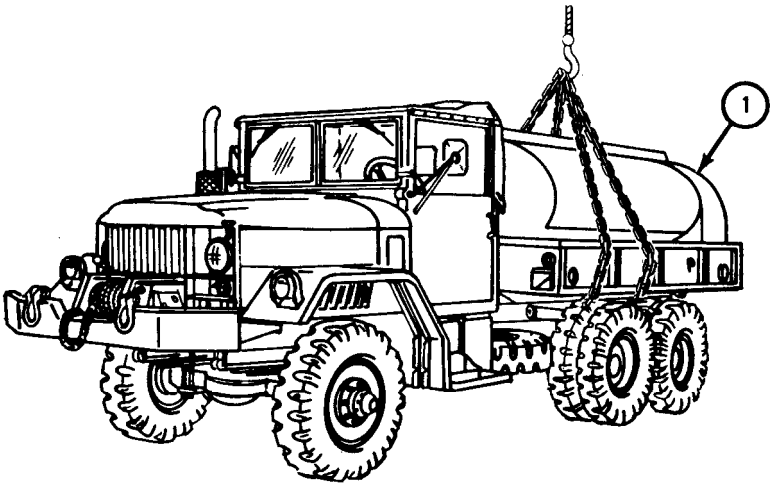

TA 101127

FRAME 2

1. Put two bolts (1) with washers (2) through front hold down mount (3).
2. Put on four springs (4), washers (5), and nuts (6).
3. Put two bolts (7) in middle and rear hold down mounts (8) and put on two nuts (9).
4. Do steps 1 through 3 again on right side of truck.

GO TO FRAME 3

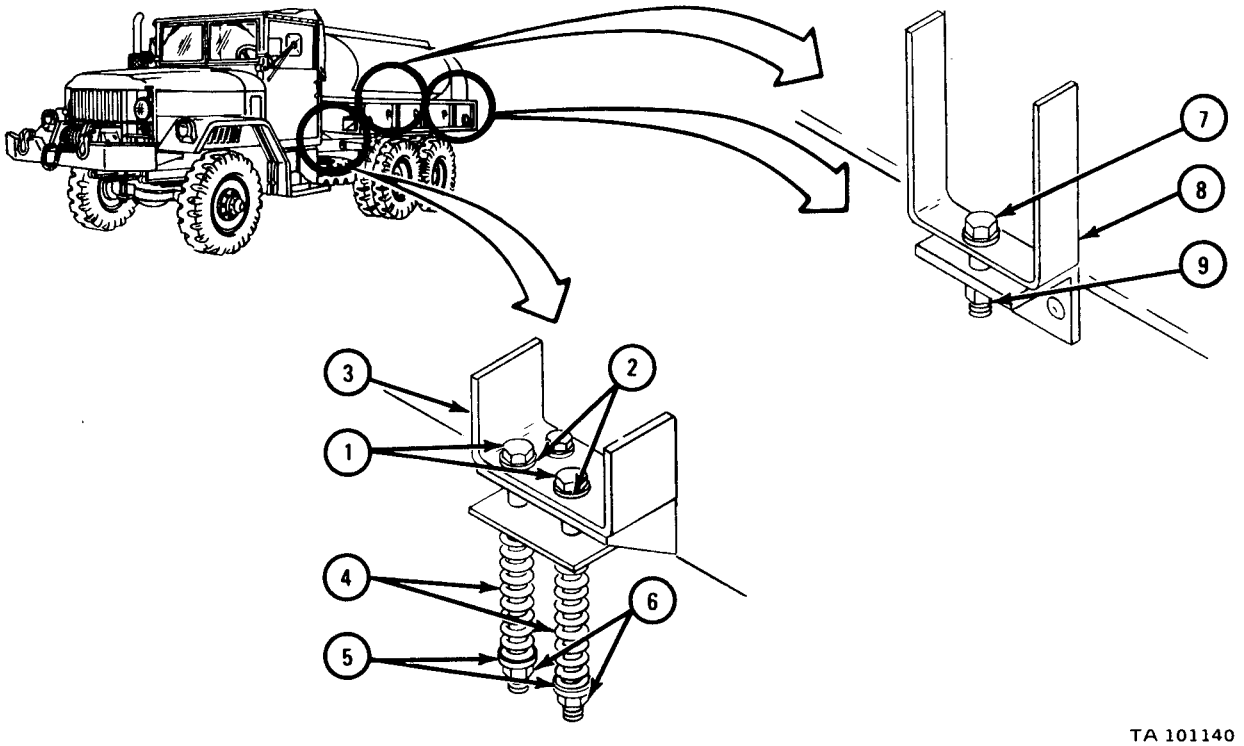

FRAME 3

NOTE

Follow-on Maintenance Action Required:

1. Replace exhaust bypass fording valve. Refer to Part 1, para 5-3.
2. Replace delivery pump and drive shaft with universal joint. Refer to TM 9-2320-209-20.
3. Replace splash shields. Refer to para 17-69.
4. Put water discharge hose, water dispenser nozzle, water suction hose, Y coupling, and water suction strainer into water tank body. Refer to TM 9-2320-209-10.
5. Replace pioneer tool rack. Refer to para 17-59.

END OF TASK

17-31. PUMP COMPARTMENT DOOR REMOVAL, REPAIR, AND REPLACEMENT (TRUCKS M50A1, M50A2, AND M50A3).

TOOLS: No special tools required

SUPPLIES: Rivet (4)

PERSONNEL: Two

EQUIPMENT CONDITION: Truck parked, engine off, handbrake set.

a. Removal.

FRAME 1

NOTE

This task is the same for left and right pump compartment doors. This task is shown for the left pump compartment door.

Soldier A	1.	Open pump compartment doors (1).
	2.	Take out three screws (2) and nuts (3).
Soldier B	3.	Hold pump compartment door (1) in place.
Soldier A	4.	Take out 10 screws (4) and nuts (5).
Soldiers A and B	5.	Take off pump compartment door (l).

END OF TASK

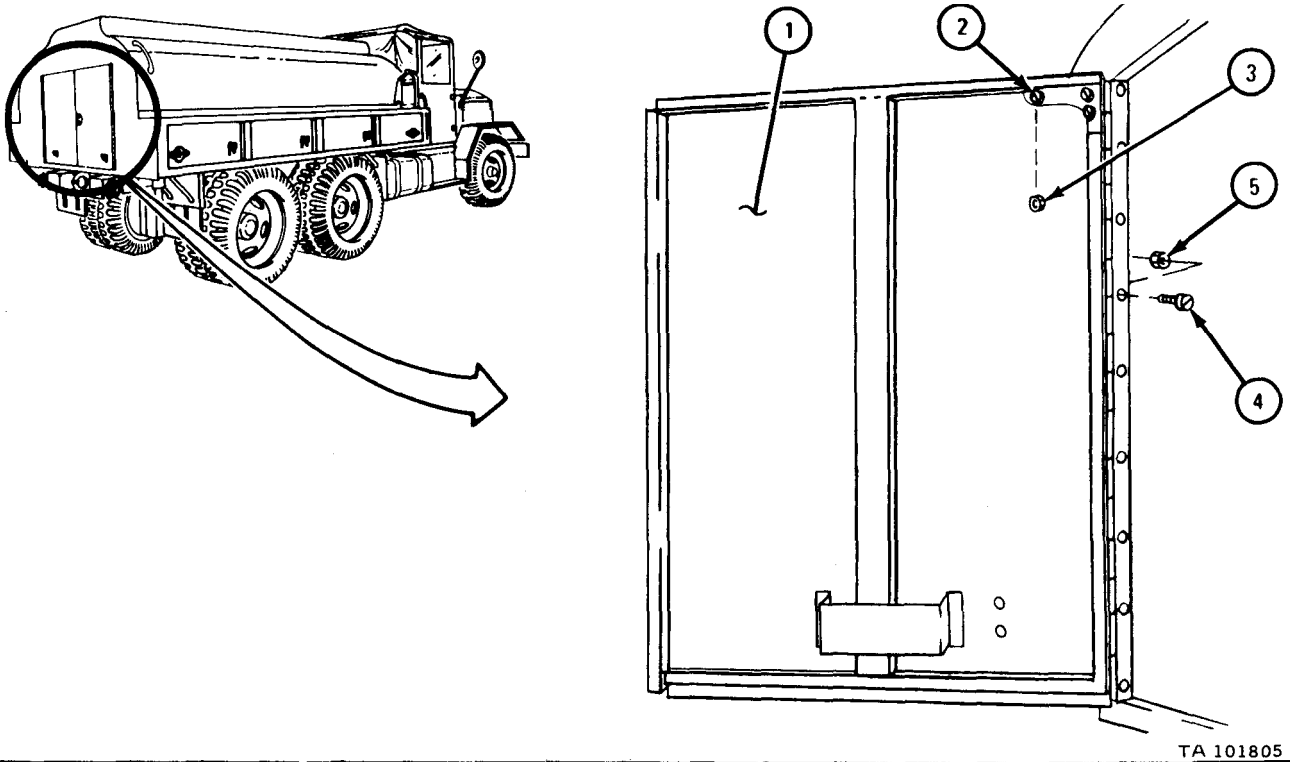

b. Disassembly.

FRAME 1

NOTE

If working on left pump compartment door, do steps 1 and 2. If working on right pump compartment door, go to frame 2.

Soldier A 1. Take off two nuts (1).

Soldier B 2. Take out two screws (2) and take off lashing hook (3).

GO TO FRAME 2

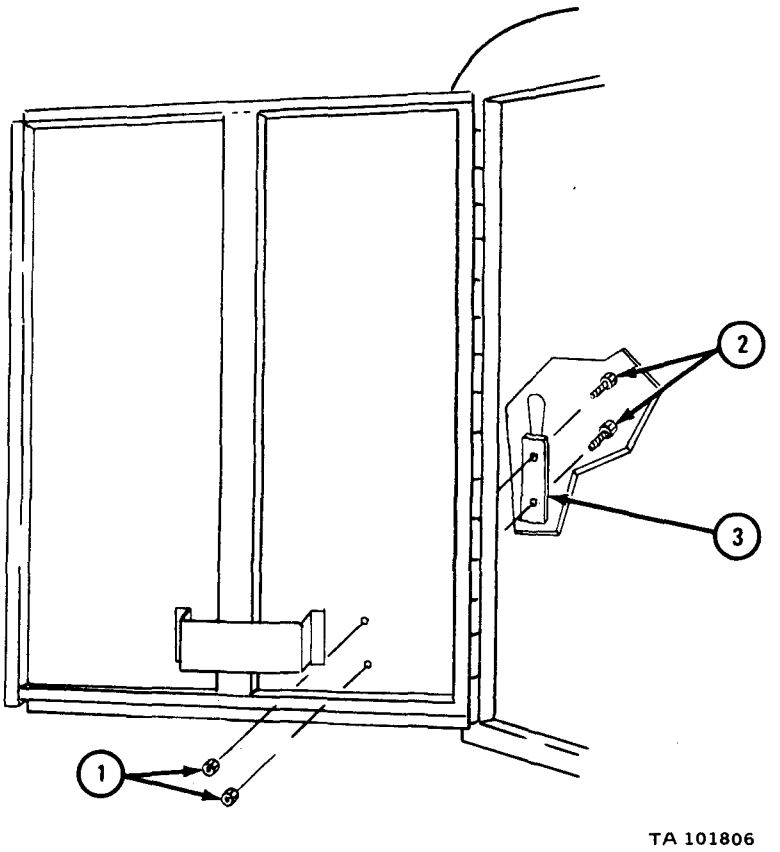

FRAME 2

Soldier A 1. Take off two nuts (1).

Soldier B 2. Take out two screws (2) and take off lashing hook (3).

3. Take out four screws (4) and take off instruction plate (5).

GO TO FRAME 3

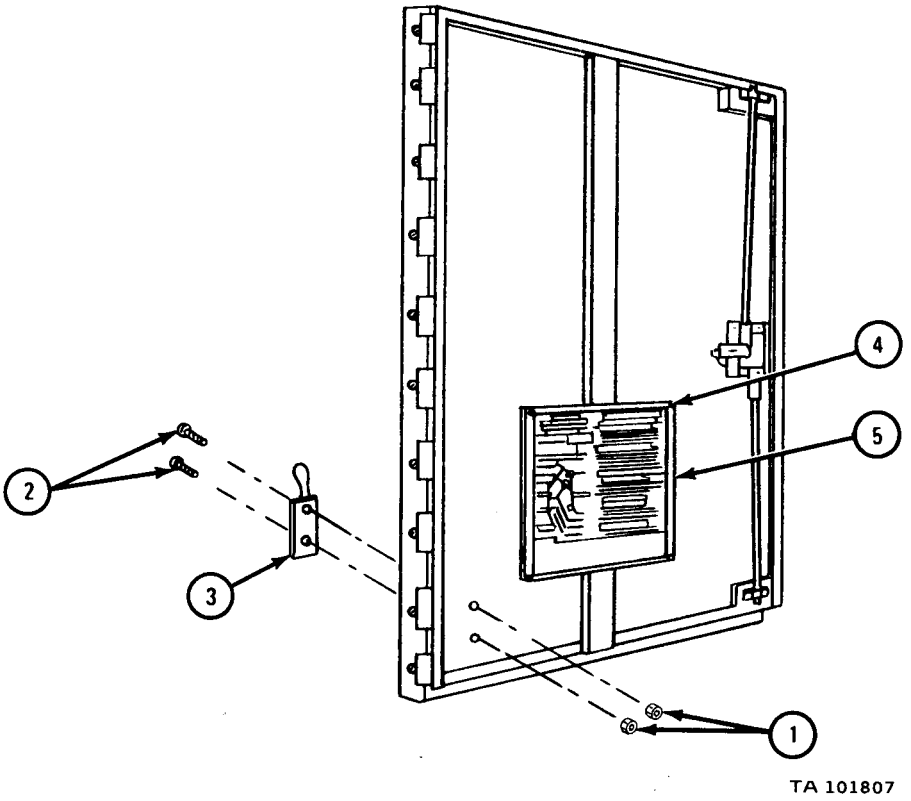

FRAME 3

Soldier A 1. Hold latch rod (1) in place to keep it from falling.

Soldier B 2. Take out two screws (2). Take off nuts (3) and latch rod guide (4).

3. Take off latch rod (1).

Soldiers A and B 4. Do steps 1 through 3 again for other latch rod (5).

GO TO FRAME 4

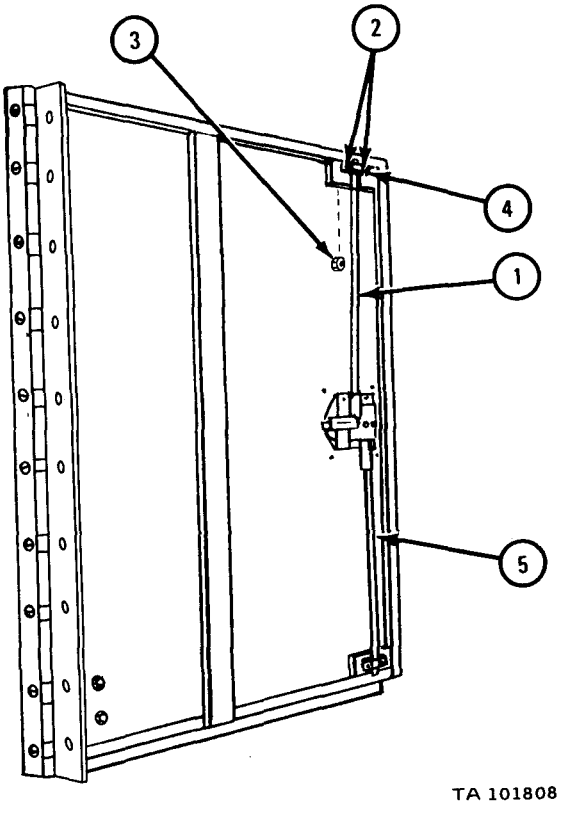

FRAME 4

1. Take off retaining nut (1) and take out lock cylinder (2).
2. Take out four rivets (3) and take off door latch (4).

END OF TASK

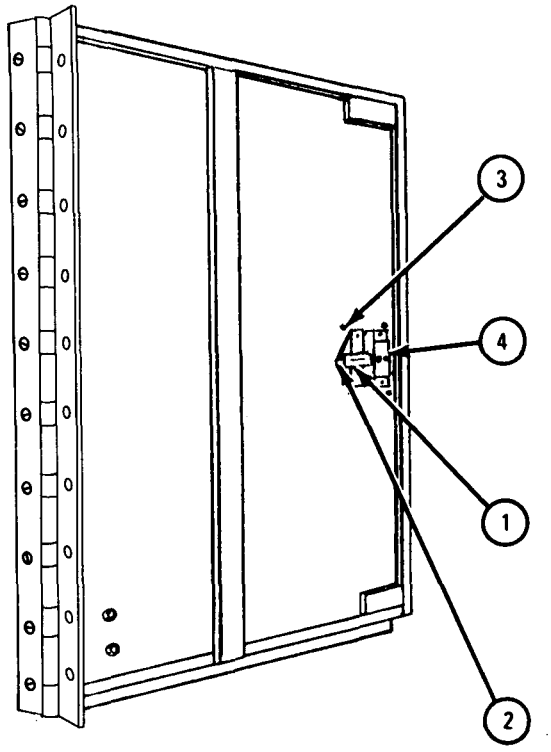

TA 101809

c. Cleaning. There are no special cleaning procedures needed. Refer to cleaning proceciures given in Part 1, para 1-3.

d. Inspection and Repair.

FRAME 1

1. Check that all threaded parts are not stripped or crossthreaded. If parts are damaged, get new ones.
2. Check that lashing hook (1), latch rods (2), latch guides (3), and instruction plate (4) are not bent or dented. Straighten bent or dented parts. Refer to FM 43-2. If more repair is needed, get new parts.
3. Check that door latch (5) is not damaged. If door latch is damaged, get a new one,
4. Check that pump compartment door (6) is not bent, dented, torn or cracked. Straighten bent or dented part. Refer to FM 43-2. Weld torn or cracked part. Refer to TM 9-237. If more repair is needed, get a new door.
5. Check that lock cylinder (7) is not damaged. If lock cylinder is damaged, get a new one.

END OF TASK

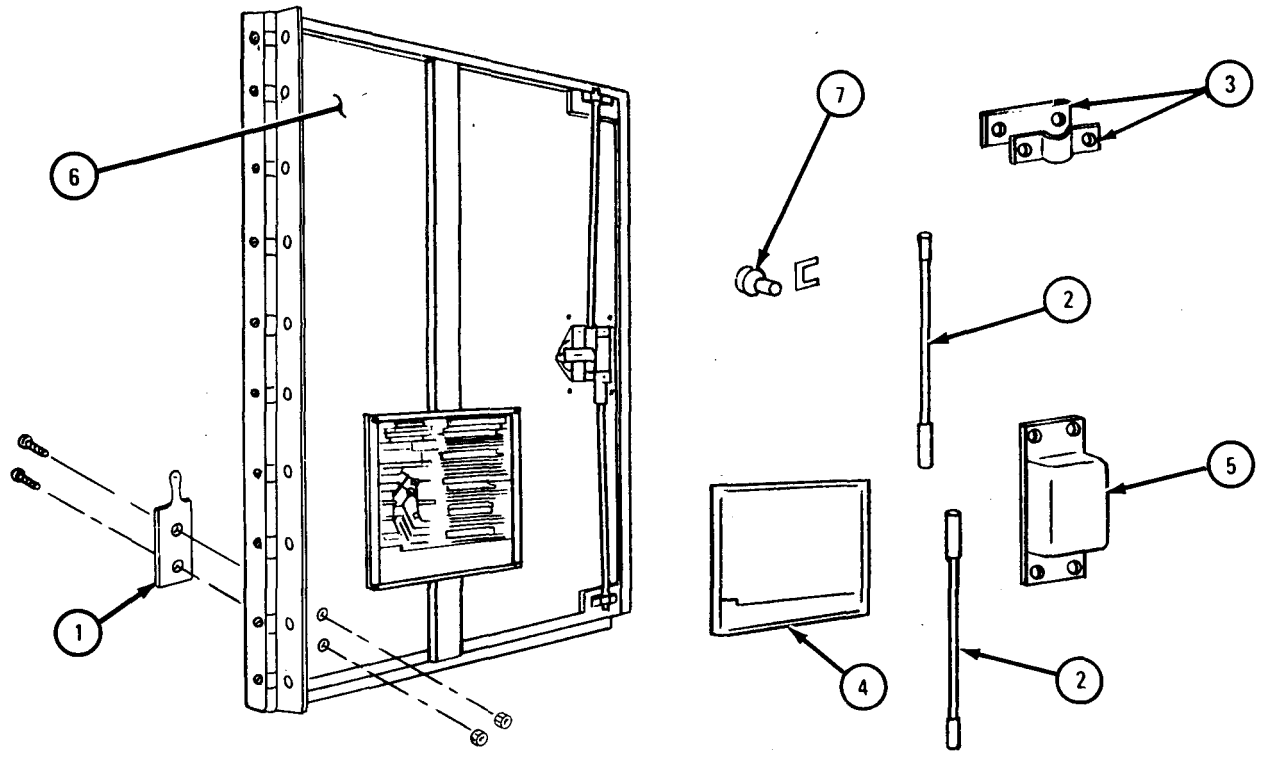

NOTE: CHECK ONLY THOSE PARTS WHICH ARE CALLED OUT. PARTS WITHOUT CALLOUTS ARE SHOWN ONLY FOR REFERENCE PURPOSES.

TA 101810

e. Assembly.

FRAME 1

NOTE

If working on left compartment door, do steps 1 and 2. If working on right pump compartment door, go to frame 2.

Soldier A 1. Put lashing hook (1) on pump compartment door (2) and put in two screws (3).

Soldier B 2. Put on two nuts (4).

GO TO FRAME 2

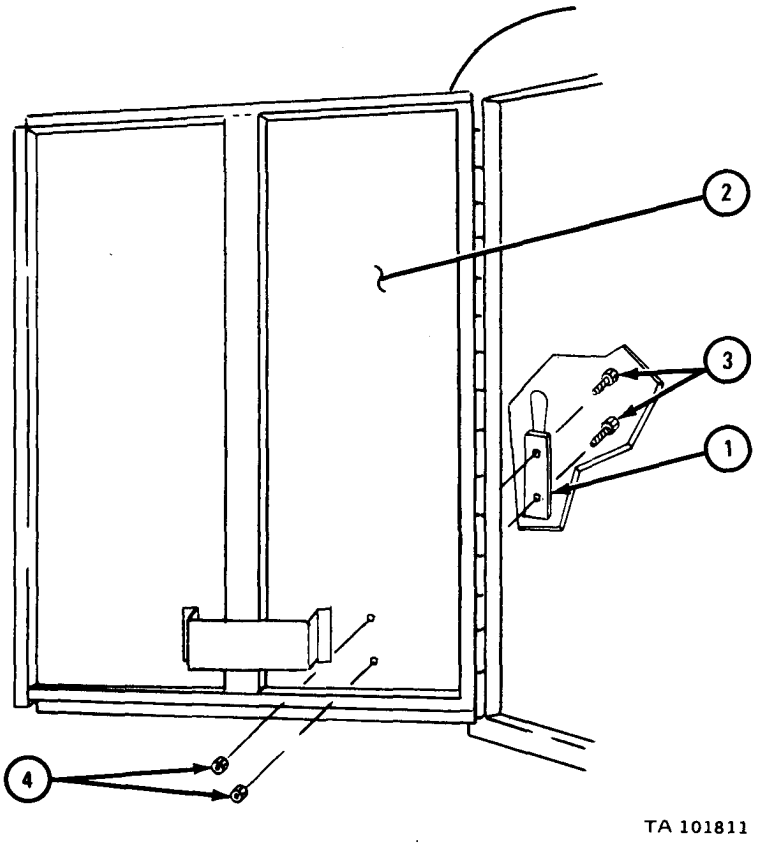

FRAME 2

Soldier A 1. Put door latch (1) on pump compartment door (2) and put in four rivets (3).

Soldier B 2. Hold latch rod (4) in place.

Soldier A 3. Put latch rod (4) on door latch (1).

4. Put latch rod guide (5) on pump compartment door (2) and put in two screws (6).

Soldiers A and B 5. Do steps 2 through 4 again for other latch rod (7).

Soldier A 6. Put in lock cylinder (8) and put on retaining ring (9).

GO TO FRAME 3

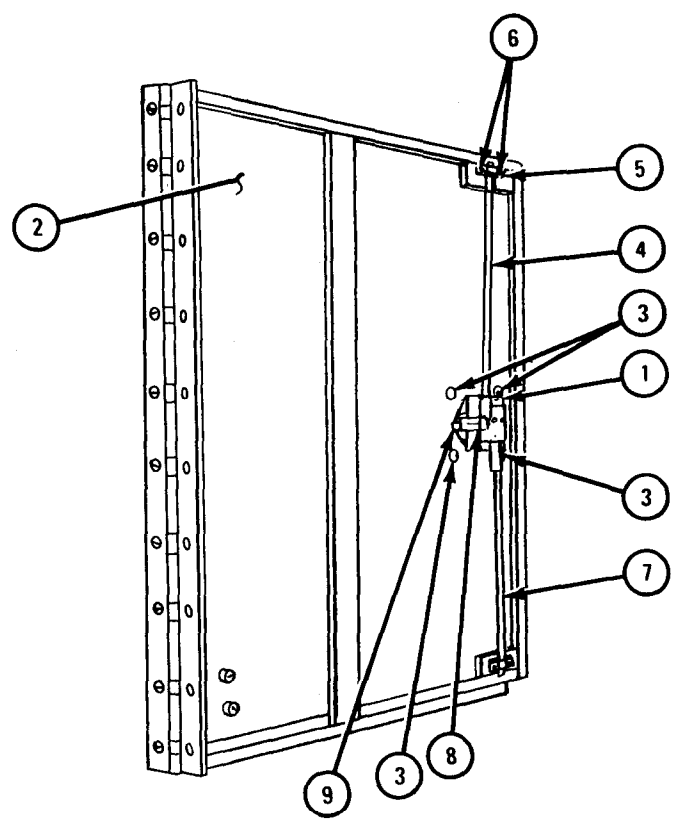

TA 101812

FRAME 3

Soldier A	1.	Put lashing hook (1) on pump compartment door (2) and put in two screws (3).
Soldier B	2.	Put on two nuts (4).
Soldier A	3.	Put instruction plate (5) on pump compartment door (2) and put in four screws (6).

END OF TASK

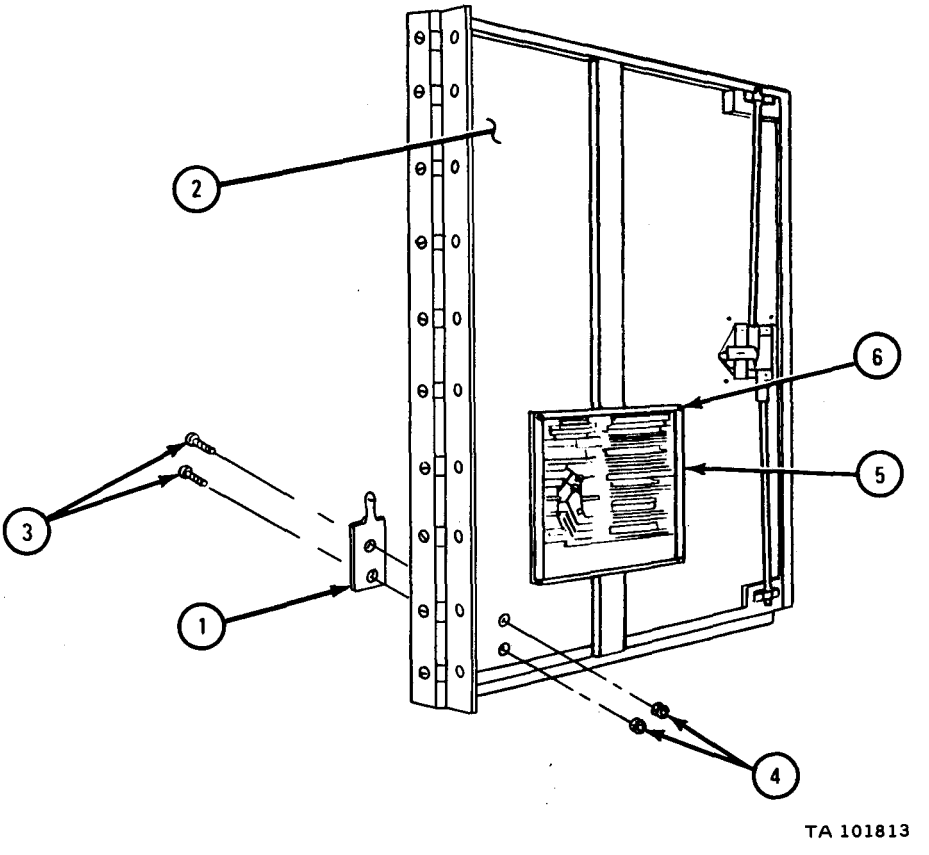

f. Replacement.

FRAME 1

NOTE

This task is the same for left and right pump compartment doors. This task is shown for the left pump compartment door.

Soldiers A and B	1.	Raise pump compartment door (1) into place.
Soldier B	2.	Hold pump compartment door (1) in place.
Soldier A	3.	Put in 10 screws (2) and put on 10 nuts (3).
	4.	Put in three screws (4) and put on three nuts (5).
	5.	Close pump compartment doors (1).

END OF TASK

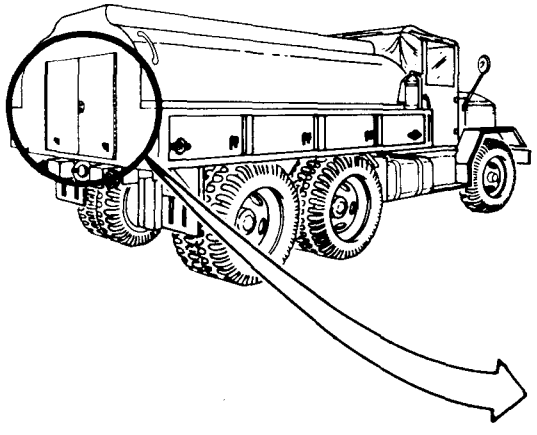

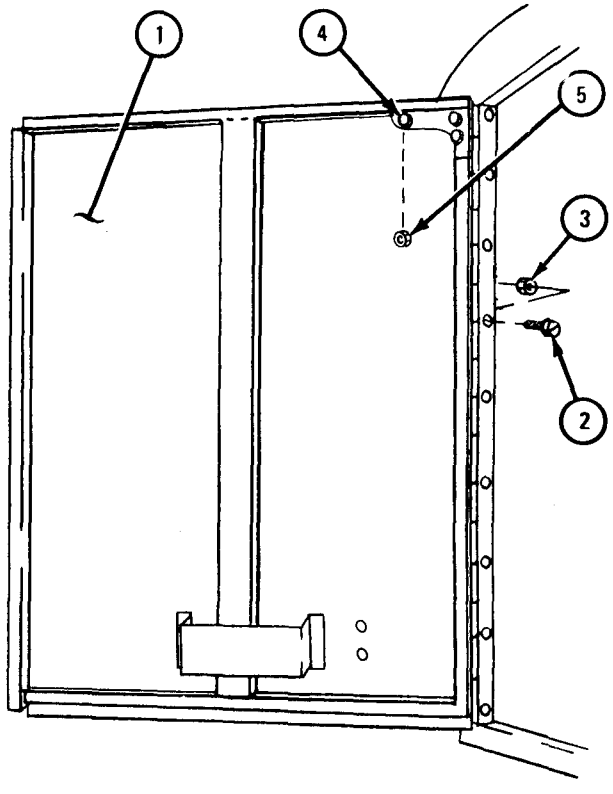

TA 101814

17-32. WATER TANK NOZZLE ASSEMBLY REPAIR.

TOOLS: No special tools required

SUPPLIES: Solvent, dry cleaning, type II (SD-2), Fed. Spec P-D-680
Packing
Cotter pin
Soap and water

PERSONNEL: One

EQUIPMENT CONDITION: Truck parked, engine off, handbrake set.

a. Preliminary Procedure. Remove water nozzle. Refer to hose and nozzle assembiy removal and replacement, TM 9-2320-209-20.

b. Disassembly.

FRAME 1

1. Take out spout (1) from nozzle body (2).
2. Take out cotter pin (3) and discharge lever pin (4).

NOTE

New equipment discharge lever (5) is riveted. Drill out rivet and put in lever pin and cotter pin.

3. Take out discharge lever (5).
4. Take off plunger packing nut (6). Take out spring (7), packing retainer (8), packing (9), and plunger (10). Throw away packing.

GO TO FRAME 2

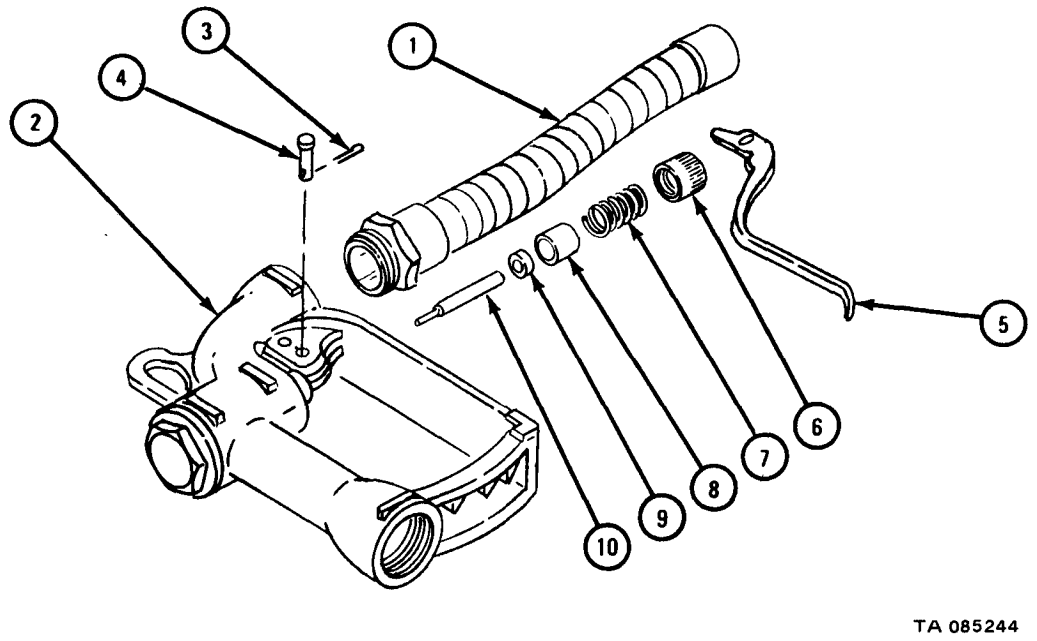

FRAME 2

1. Take off nut (1).
2. Take out spring (2), push rod (3), and cylinder (4).

END OF TASK

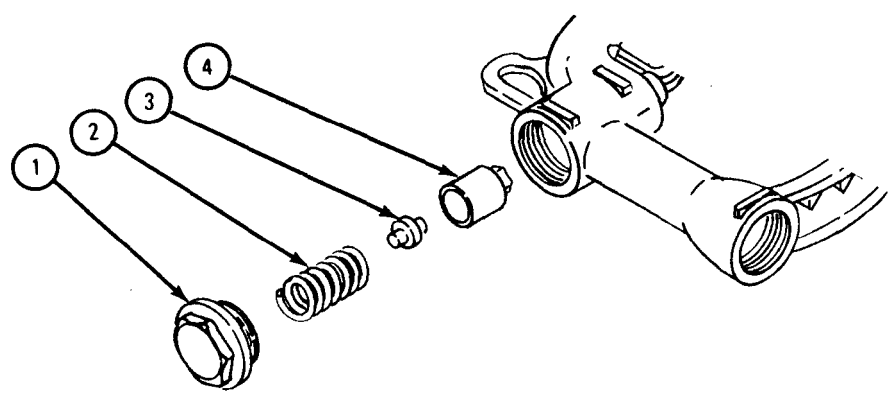

TA 085245

WARNING

Dry cleaning solvent is flammable. Do not use near an open flame. Keep a fire extinguisher nearby when solvent is used. Use only in well-ventilated places. Failure to do this may result in injury to personnel and damage to equipment.

c. Cleaning.

(1) Clean all metal parts in dry cleaning solvent.

(2) Clean all other parts in soap and water and then rinse in clear water.

d. Inspection and Repair.

FRAME 1

1. Check that packing nut (1) has no cracks or damaged threads. If damaged, throw away and get a new one.
2. Check that packing retainer (2), spring (3), and plunger (4) are not cracked or damaged. If parts are cracked or damaged, throw them away and get new ones.
3. Check that nozzle body (5) and spout (6) have no cracks or damaged threads. If they are damaged, throw them away and get new ones.
4. Check that nut (7), spring (8), push rod (9), and cylinder (10) are not damaged. If they are damaged, get a new nozzle body (5).

END OF TASK

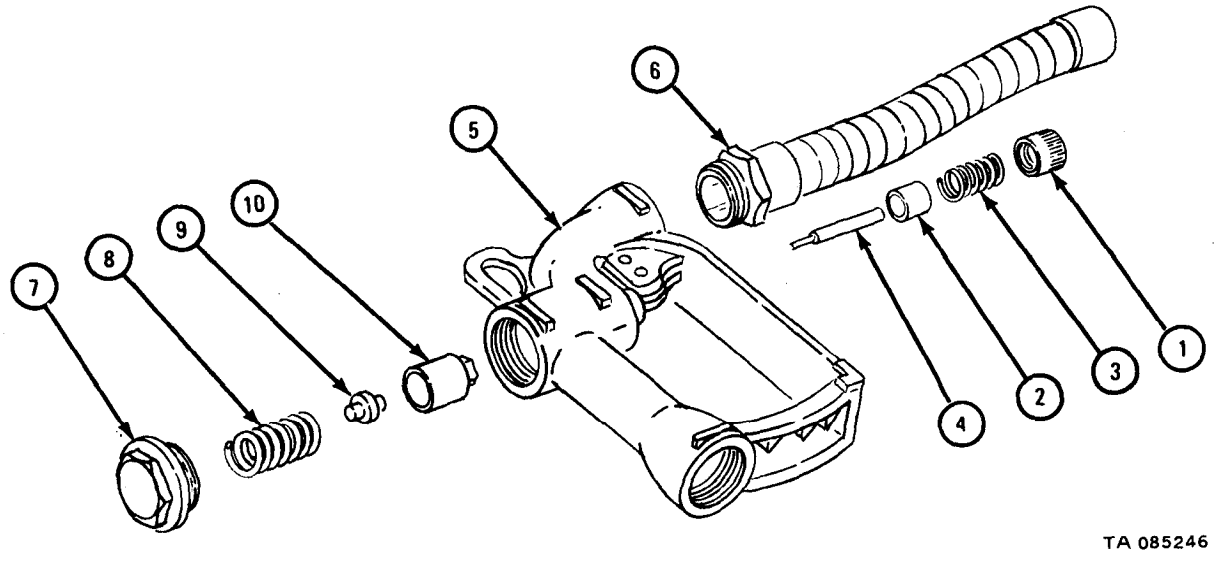

e. Assembly.

FRAME 1

1. Put discharge lever (1) in body (2).
2. Put in discharge lever pin (3) and cotter pin (4).
3. Put in spout (5).
4. Slide in plunger (6).
5. Put on packing (7), packing retainer (8), spring (9), and packing nut (10).

GO TO FRAME 2

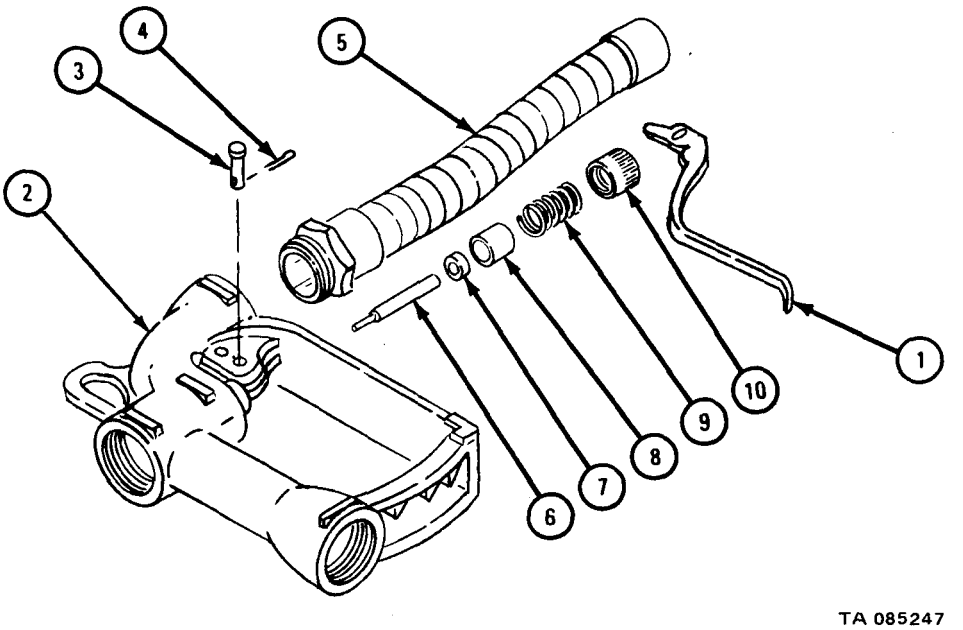

FRAME 2

1. Put back cylinder (1), push rod (2) and spring (3).
2. Put on nut (4).

NOTE

Follow-on Maintenance Action Required:

Replace water nozzle. Refer to hose and nozzle assembly removal and replacement, TM 9-2320-209-20.

END OF TASK

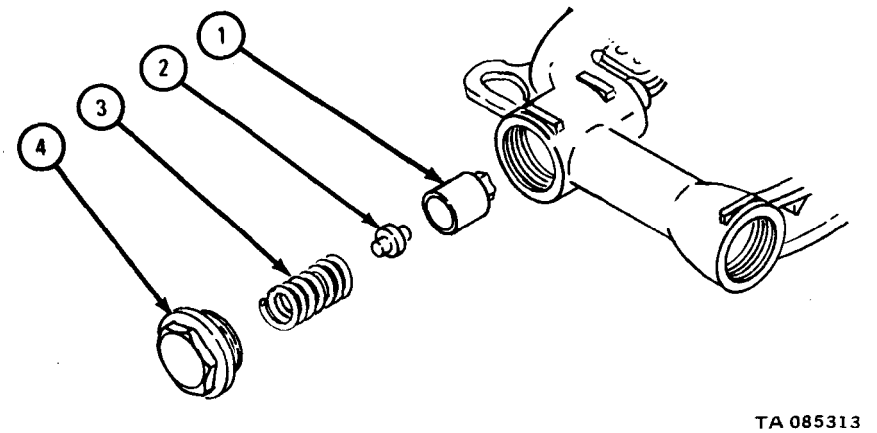

17-33. WATER DISCHARGE PIPE REPAIR (TRUCKS M50A2 AND M50A3).

TOOLS: No special tools required

SUPPLIES: Solvent, dry cleaning, type II (SD-2), Fed. Spec P-D-680

PERSONNEL: One

EQUIPMENT CONDITION: Truck parked, engine off, handbrake set.

Preliminary Procedure. Remove discharge pipe. Refer to TM 9-2320-209-20.

b. Cleaning, Inspection, and Repair.

FRAME 1

WARNING

Dry cleaning solvent is flammable. Do not use near an open flame. Keep a fire extinguisher nearby when solvent is used. Use only in well-ventilated places. Failure to do this may result in injury to personnel and damage to equipment.

1. Clean discharge pipe (1) with dry cleaning solvent.
2. Check that discharge pipe (1) has no cracks or holes.
3. If discharge pipe (1) is damaged, throw it away and get new one.

NOTE

Follow-on Maintenance Action Required:

Replace discharge pipe. Refer to TM 9-2320-209-20.

END OF TASK

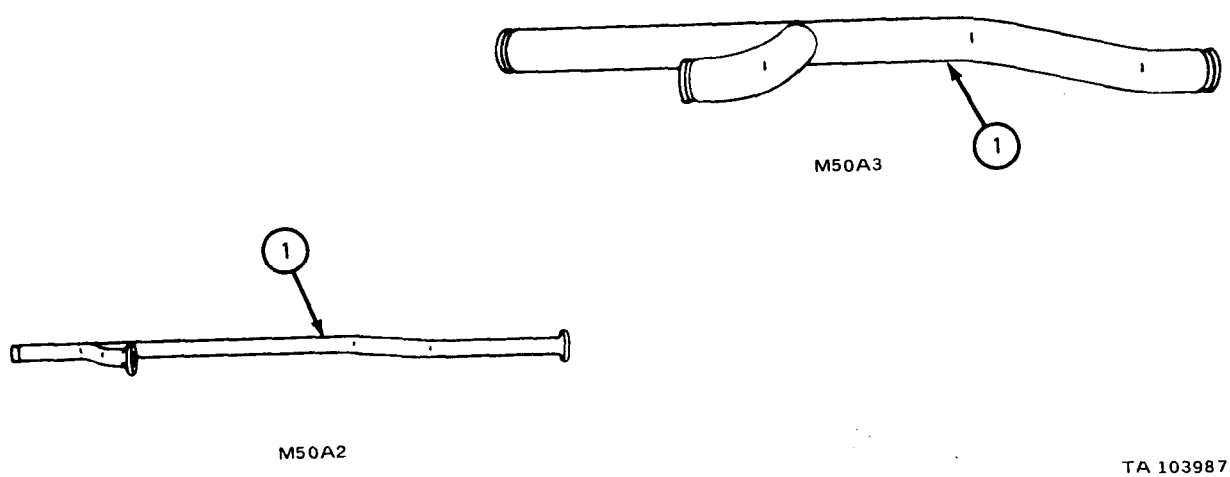

Section VII. SPECIAL PURPOSE BODY COMPONENTS

17-34. COMMUNICATION DOOR ASSEMBLY REMOVAL, REPAIR, AND REPLACEMENT (TRUCKS M109A2, M109A3, M185A2, AND M185A3).

TOOLS: No special tools required

SUPPLIES: Solvent, dry cleaning, type II (SD-2), Fed. Spec P-D-680
Compound, grease cleaning, MIL-C-11090C

PERSONNEL: One

EQUIPMENT CONDITION: Truck parked, engine off, handbrake set.

a. Removal.

FRAME 1

1. Working inside van, unlock door handle (1).
2. Punch and drill out rivets holding chain (2) to door (3) and body (4).
3. Unsnap two latches (5) and take off door (3).

END OF TASK

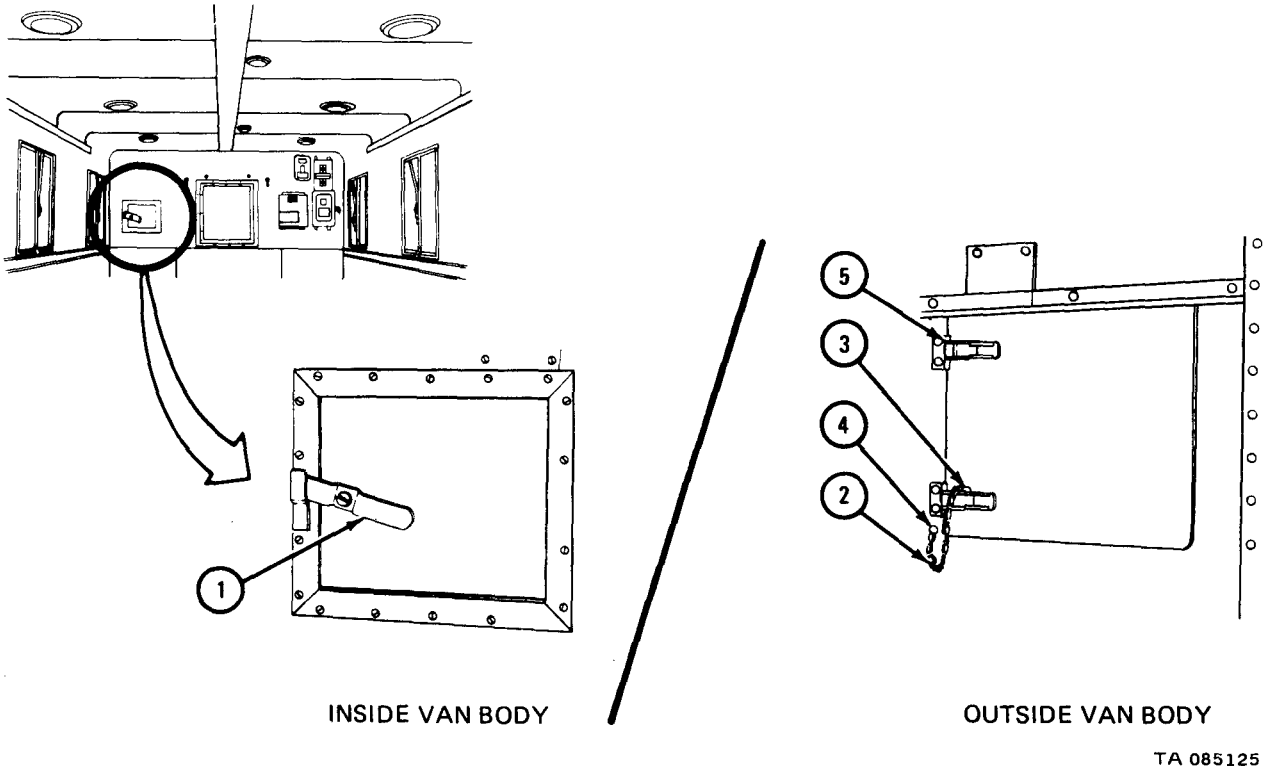

b. Disassembly

FRAME 1

1. Take out screw (1) and take off handle (2).

END OF TASK

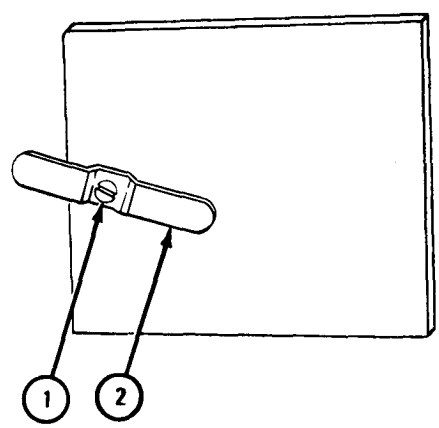

TA 085126

c. Cleaning.

WARNING

Dry cleaning solvent is flammable. Do not use near an open flame. Keep a fire extinguisher nearby when solvent is used. Use only in well-ventilated places. Failure to do this may result in injury to personnel and damage to equipment.

(1) Clean all parts with solvent and stiff bristle brush. If needed, use steam cleaner to take off heavy grease or gum or mix one part grease cleaning compound to four parts dry cleaning solvent.

(2) After cleaning, rinse parts well with cold water.

d. Inspection and Repair.

FRAME 1

1. Check that door (1) has no dents, cracks or other damage. Repair damage by straightening or welding. Refer to TM 9-237. If damage cannot be fixed, get a new part.
2. Check that handle (2) is not bent, cracked or damaged. If handle is damaged, get a new one.

END OF TASK

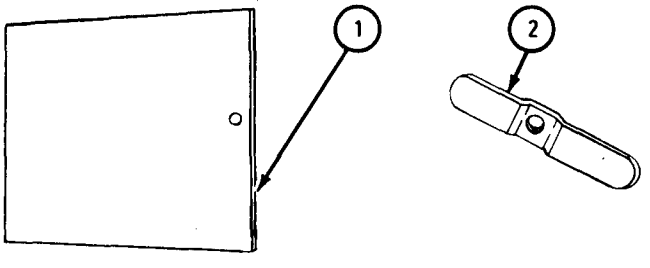

TA 085312

e. Assembly.

FRAME 1

1. Put handle (1) on door (2) and put in screw and washer (3).

END OF TASK

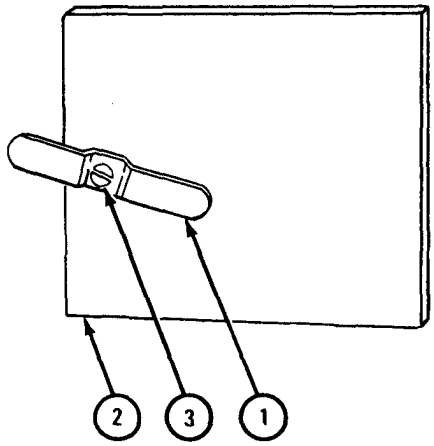

TA 085127

f. Replacement.

FRAME 1

1. Working outside van, snap on two latches (1).
2. Put in two rivets (2) holding chain (3).
3. Working inside van, lock door handle (4).

END OF TASK

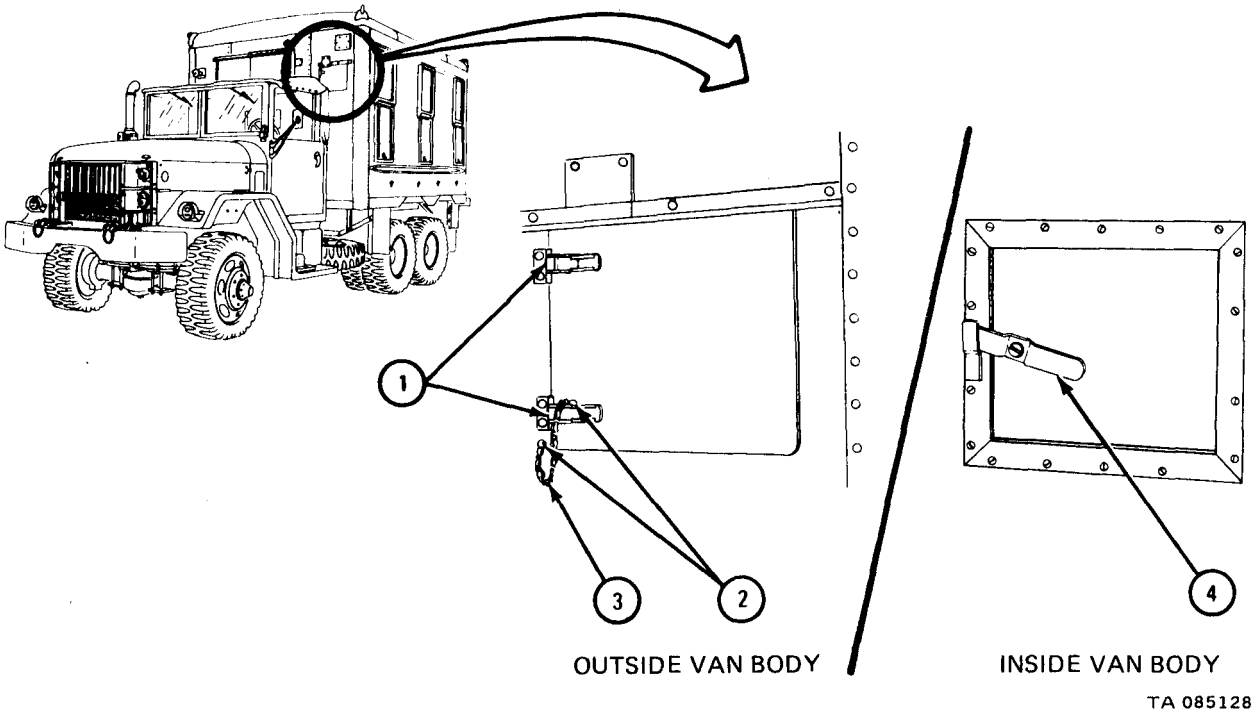

17-35. DOME LIGHT (115 VOLT) REPAIR.

TOOLS: No special tools required

SUPPLIES: Solvent, dry cleaning, type II (SD-2), Fed. Spec P-D-680
Adhesive, Fed. Spec MMM-A-1617
Compressed air source, 30 psi max
Dome light socket gasket
Dome light door gasket
Dome light door tubular rivets (2)

PERSONNEL: One

EQUIPMENT CONDITION: Truck parked, engine off, handbrake set.

a. Preliminary Procedure. Remove 115-volt dome light assembly. Refer to TM-2320-209-20.

b. Disassembly.

FRAME 1

1. Take out and throw away two rivets (1). Take off light door (2).

WARNING

Be careful when taking out lens (3). Lens can break and cause injury to personnel.

2. Push out lens (3).
3. Take off and throw away gasket (4).
4. Take out lamp (5), collar (6), gasket (7), and socket (8). Throw away gasket.

END OF TASK

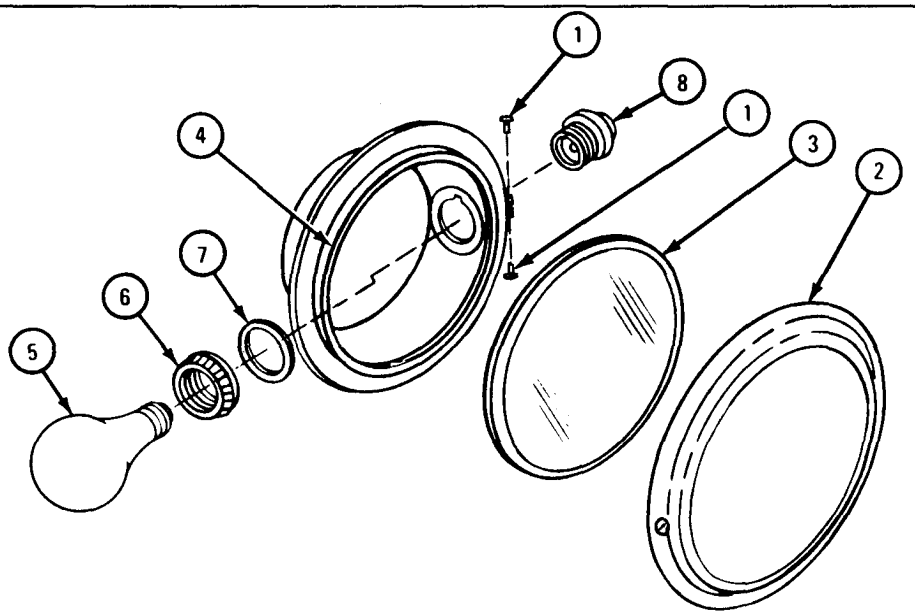

c. Cleaning.

FRAME 1

1. Clean lens (1) with soapy water.
2. Take off any old gasket cement on housing (2) and light door (3) with soapy water.

WARNING

Dry cleaning solvent is flammable. Do not use near an open flame. Keep a fire extinguisher nearby when solvent is used. Use only in well-ventilated places. Failure to do this may result in injury to personnel and damage to equipment.

Eye shields must be worn when using compressed air. Eye injury can occur if eye shields are not used.

3. Clean housing (2), door (3), collar (4), and socket (5) with dry cleaning solvent. Dry parts with compressed air.

END OF TASK

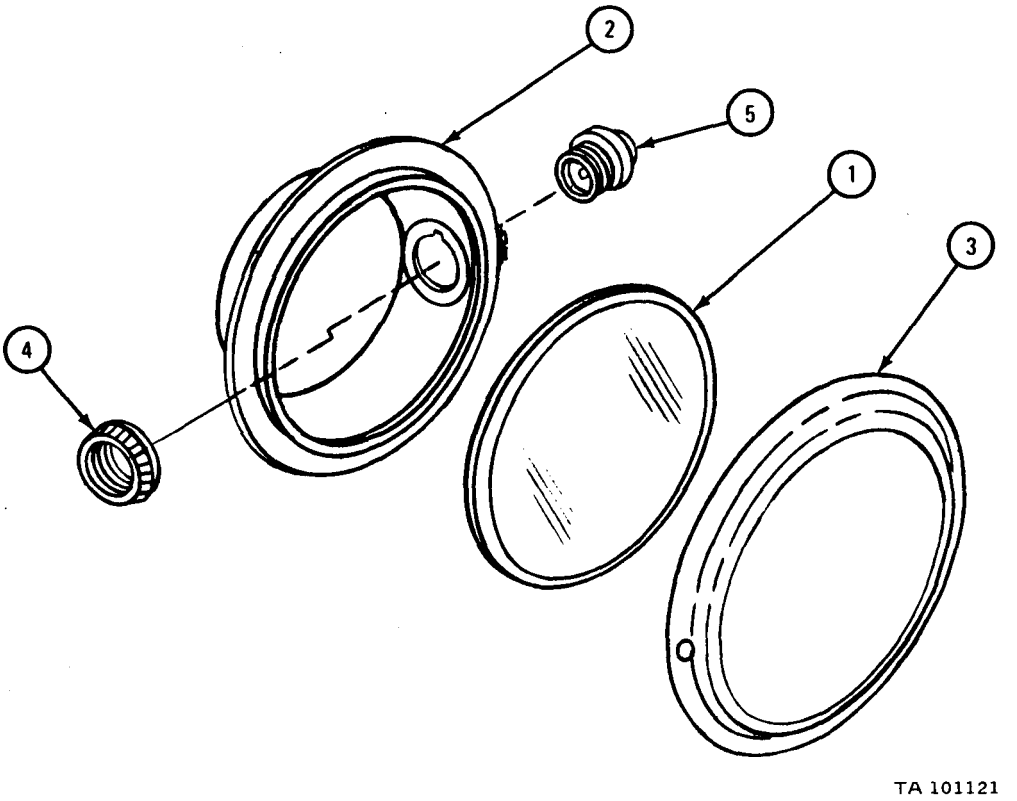

d. Inspection and Repair.

FRAME 1

1. Check that light door (1) and housing (2) have no dents.
2. Check that lens (3) is not chipped or cracked.
3. Check that collar (4) is not chipped or cracked.
4. Check that socket (5) is not chipped or cracked and that it does not have broken contacts.
5. Check that lamp (6) is not cracked and that it does not have burned-out filament or corroded contact.
6. Check that all threaded parts are not stripped or crossthreaded.
7. If parts are damaged, throw parts away and get new ones.

END OF TASK

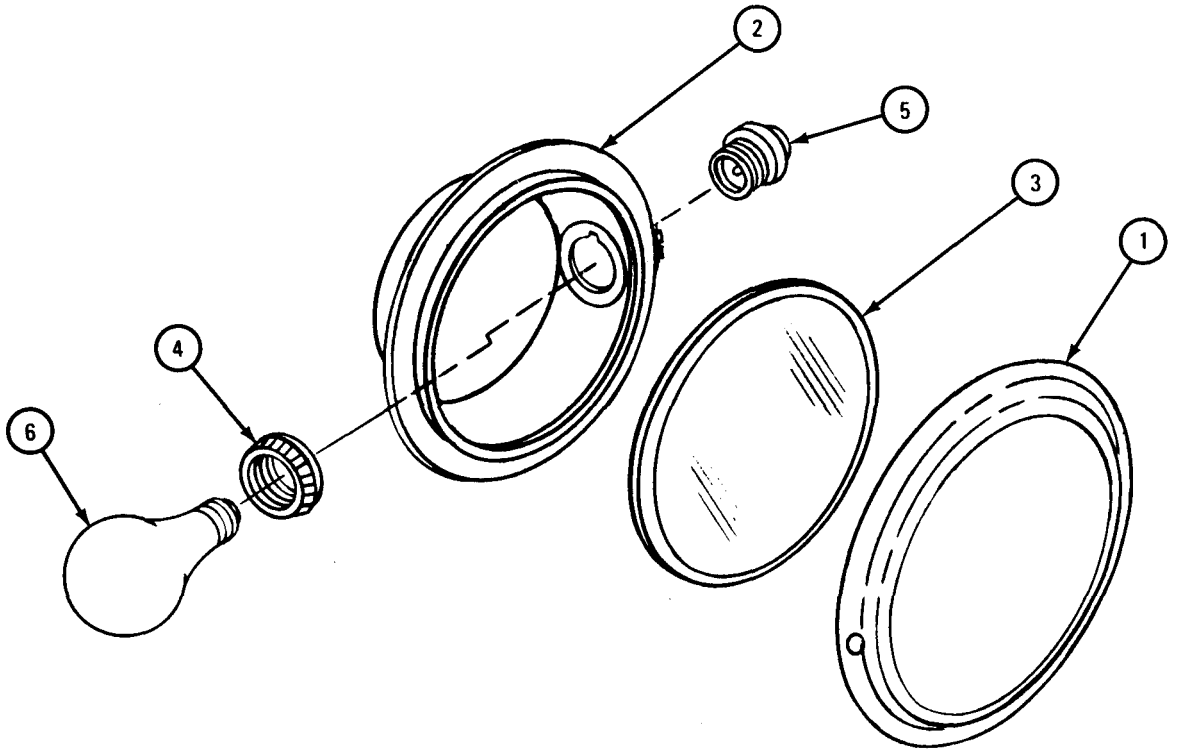

TA 101122

a. Assembly.

FRAME 1

1. Using adhesive, put gasket (1) on housing (2) and let adhesive dry.
2. Put in and hold socket (3). Put on gasket (4) and collar (5).
3. Put in lamp (6).
4. Put light door (7) into place and aline holes. Put in two rivets (8).
5. Put lens (9) in light door (7).

NOTE

Follow-on Maintenance Action Required:

Replace 115-volt dome light assembly. Refer to TM 9-2320-209-20.

END OF TASK

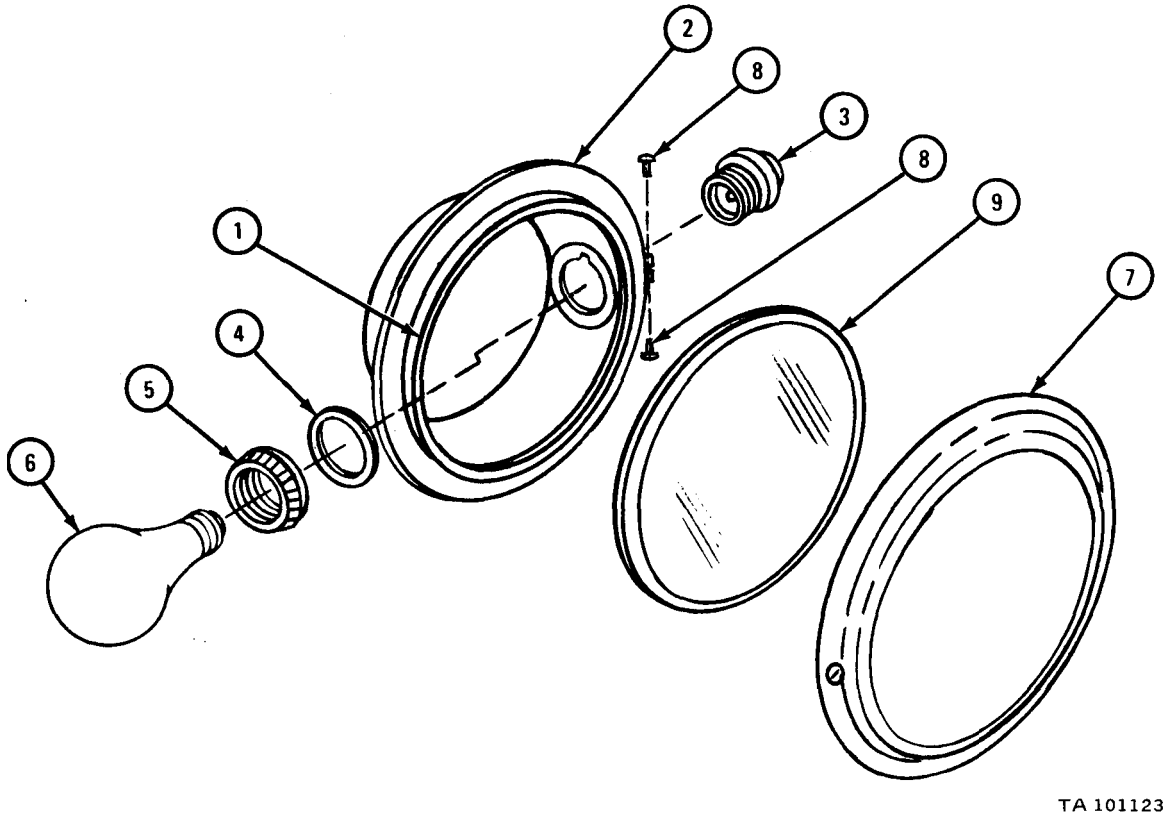

17-36. CIRCUIT BREAKER BOX ASSEMBLY REMOVAL, REPAIR, AND REPLACEMENT.

TOOLS: No special tools required

SUPPLIES: Solvent, dry cleaning, type II (SD-2), Fed. Spec P-D-680
Clean rags
Emery cloth

PERSONNEL: One

EQUIPMENT CONDITION: Truck parked, engine off, hand brake set.

WARNING

Disconnect all external supply cables before working on circuit breaker box. Electric current can cause injury to personnel and damage to equipment.

Preliminary Procedure. Disconnect external power supply cables. Refer to TM 9-2320-209-10.

b. Removal.

FRAME 1

1. Take out four screws (1) and take off cover (2).

NOTE

Tag all wire leads so they will be put back in the right place.

2. Loosen five screws (3) and take off five wire leads (4).
3. Loosen four screws (5) and take off four wire leads (6).
4. Loosen screw (7) and take off bottom lead (8).

GO TO FRAME 2

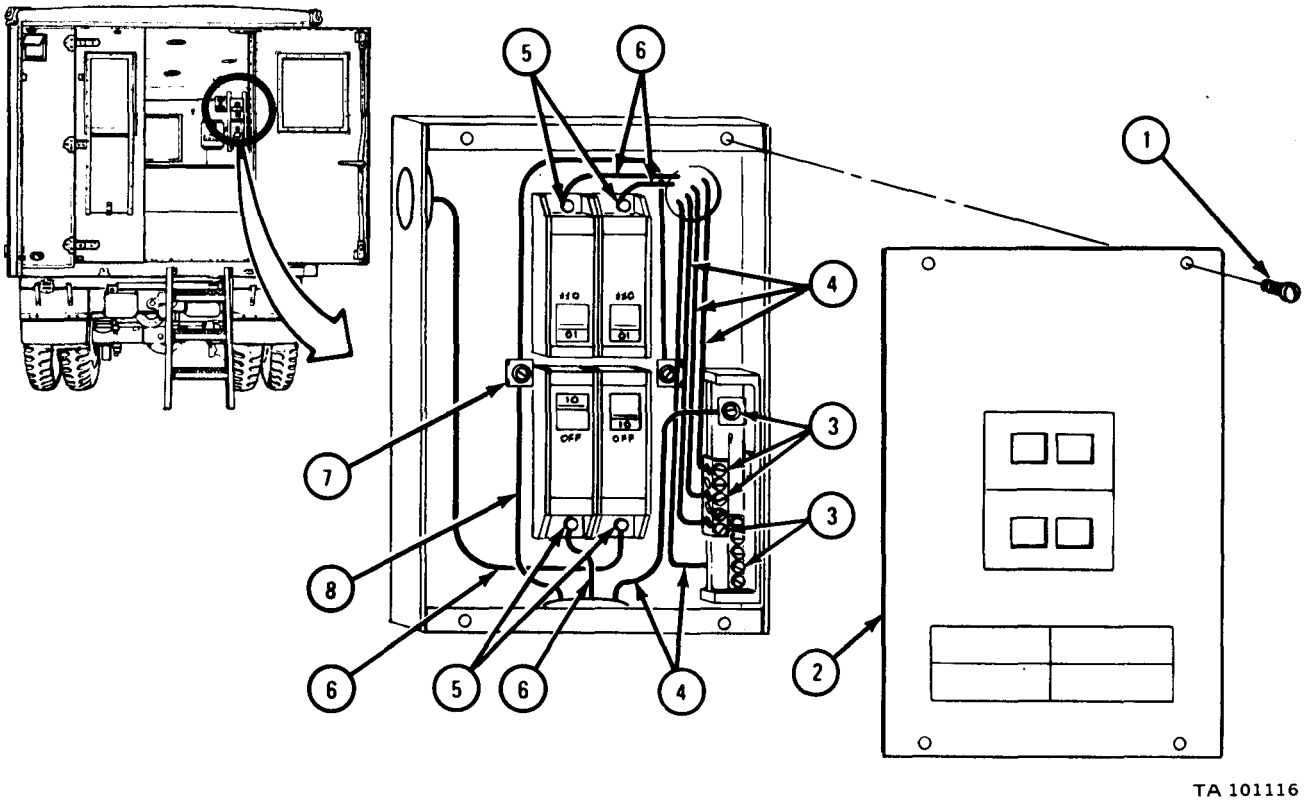

FRAME 2

1. Take out two conduit end bushings (1).
2. Take off two nuts (2).
3. Take circuit breaker box (3) off wall (4).

END OF TASK

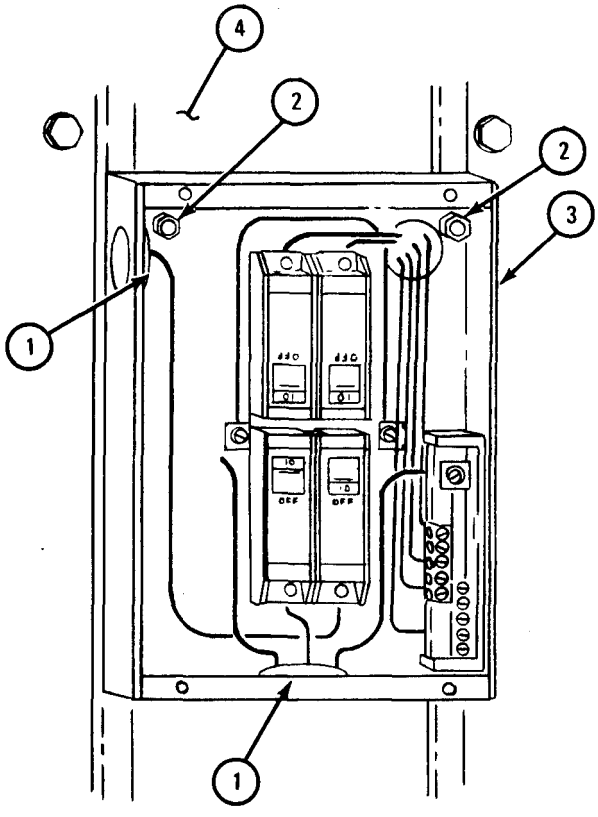

c. Cleaning.

WARNING

Dry cleaning solvent is flammable. Do not use near an open flame. Keep a fire extinguisher nearby when solvent is used. Use only in well-ventilated places. Failure to do this may result in injury to personnel and damage to equipment.

(1) Clean metal parts with dry cleaning solvent. Dry with clean rags.

(2) Clean wire lead terminals, screws, and circuit breakers with emery cloth.

d. Inspection and Repair.

FRAME 1

WARNING

Do not repair circuit breakers. If a circuit breaker is damaged, get a new one. Repaired circuit breaker can cause electrical fire, injury to personnel, and damage to equipment.

1. Check that cover (1) and breaker box (2) are not bent, dented, torn or damaged. Repair by straightening or welding. Refer to FM 43-2 and TM 9-237. If more repair is needed, get new parts.
2. Check that terminals (3) have no corrosion, signs of overheating or other damage, If terminals are damaged, get new parts.
3. Move four reset levers (4) up and down and check that they do not stick or bind. If reset levers stick or bind, get a new circuit breaker unit.

END OF TASK

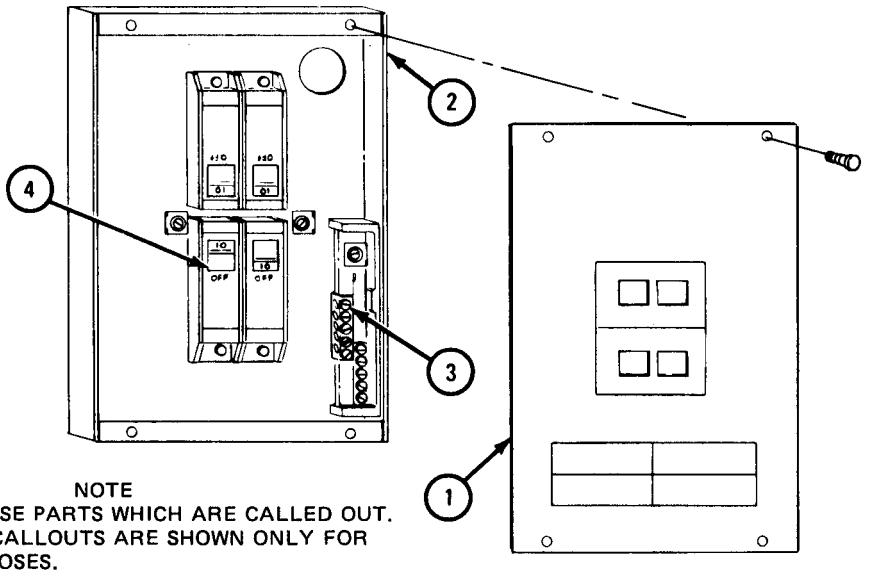

NOTE
CHECK ONLY THOSE PARTS WHICH ARE CALLED OUT. PARTS WITHOUT CALLOUTS ARE SHOWN ONLY FOR REFERENCE PURPOSES.

TA 101144

a. Replacement.

FRAME 1

1. Put wires into breaker box (1).
2. Put breaker box (1) in place on wall (2).
3. Put on two nuts (3).
4. Put on two conduit end bushings (4).

GO TO FRAME 2

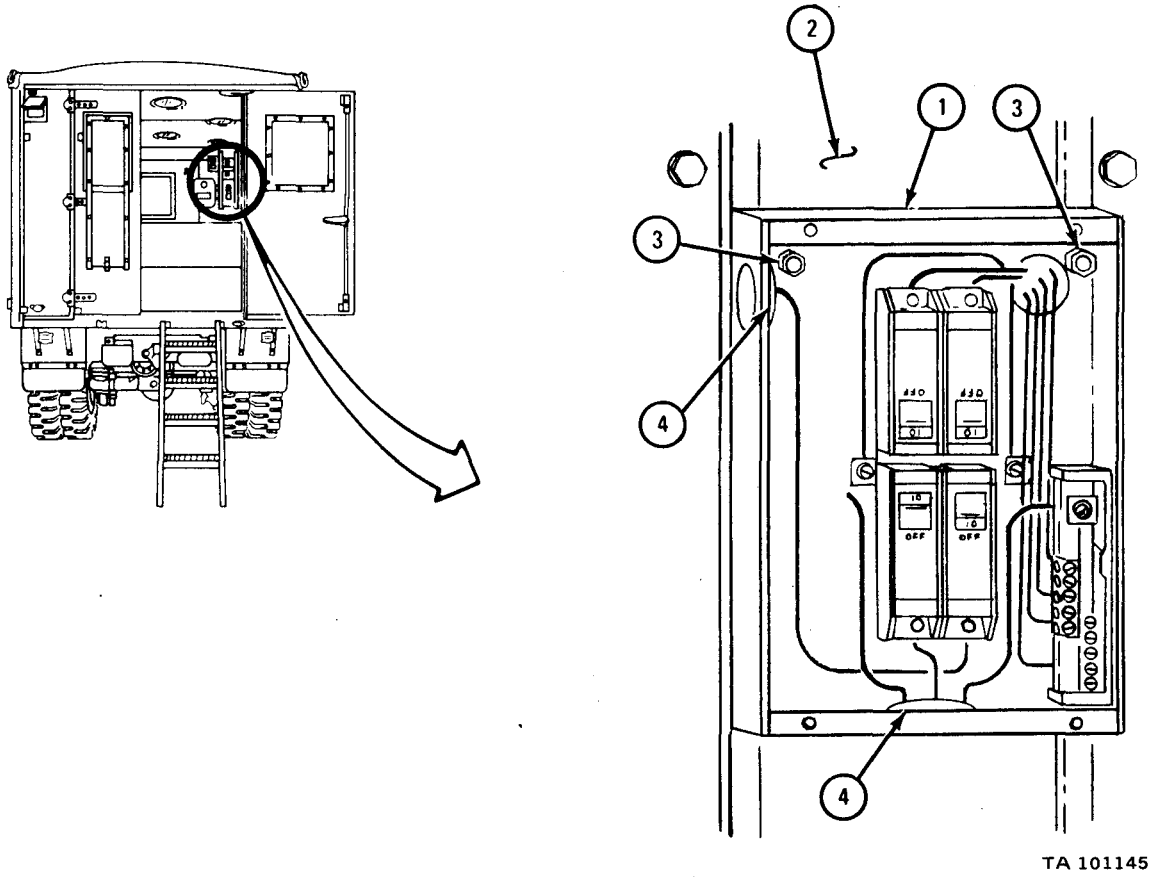

FRAME 2

1. Put bottom lead (1) in place and tighten screw (2).
2. Put four wire leads (3) in place as tagged and tighten screws (4).
3. Take off tags. Put five wire leads (5) in place as tagged and tighten screws (6).
4. Take off tags. Put cover (7) in place and put in four screws (8).

NOTE

Follow-on Maintenance Action Required:

Connect external power supply cables. Refer to TM 9-2320-209-10.

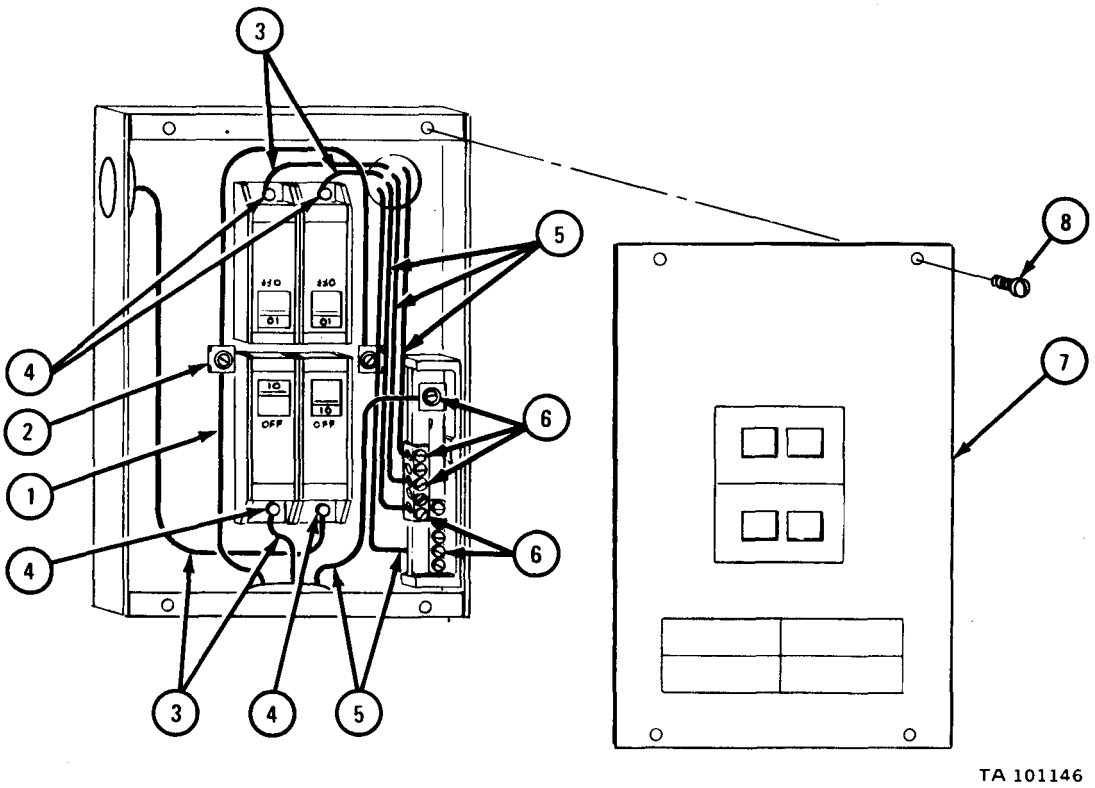

17-37. CONVERTER REMOVAL AND REPLACEMENT (TRUCKS M109A2 AND M109A3).

TOOLS: No special tools required

SUPPLIES: None

PERSONNEL: Two

EQUIPMENT CONDITION: Truck parked, engine off, handbrake set.

a. Removal.

FRAME 1

1. Unplug plug (1).
2. Take out plug (2).

GO TO FRAME 2

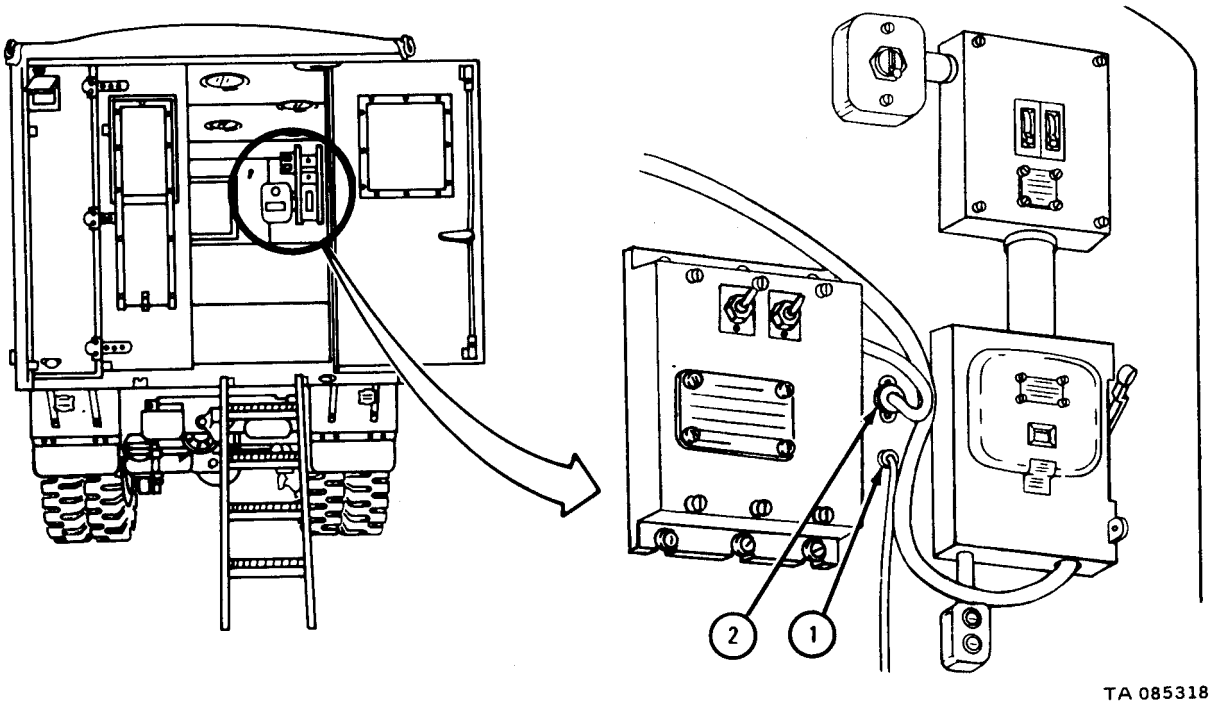

FRAME 2

Soldier A 1. Hold converter (1) in place.

Soldier B 2. Loosen six screws with lockwashers and flat washers (2).

Soldier A 3. Take converter (1) off van wall (3).

END OF TASK

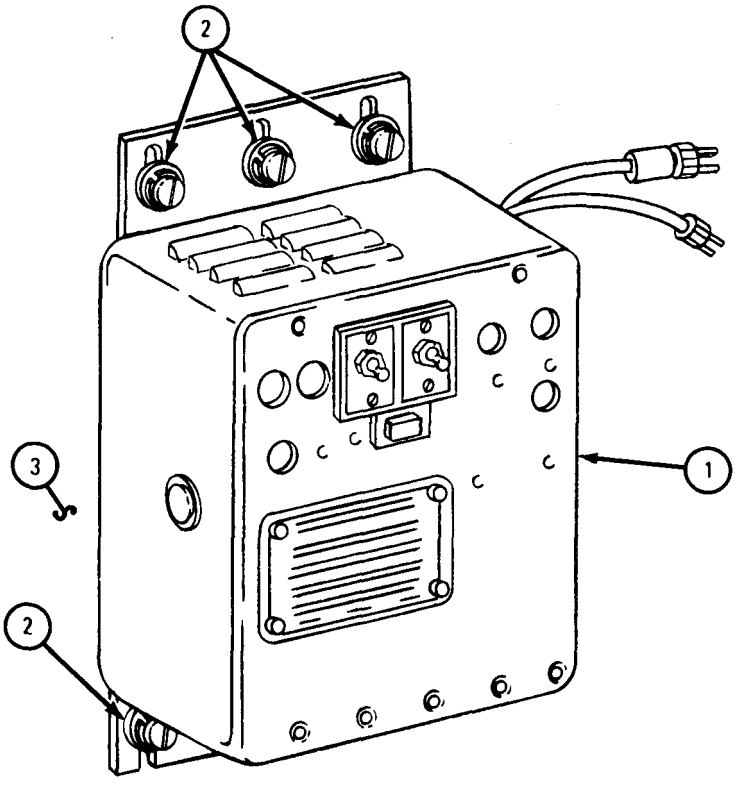

TA 101190

b. Replacement.

FRAME 1

Soldier A 1. Put converter (1) in place.

Soldier B 2. Tighten six screws with lockwashers and flat washers (2).

GO TO FRAME 2

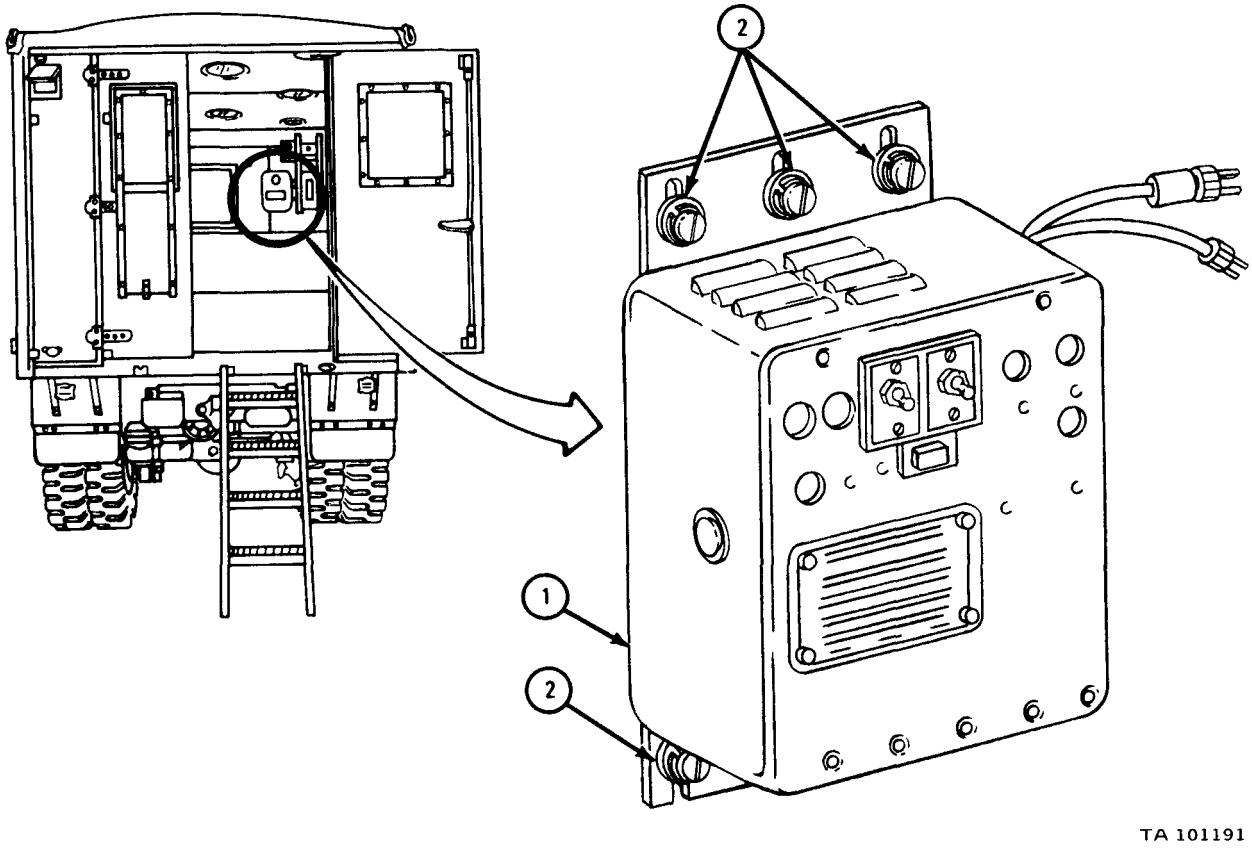

FRAME 2

1. Put in plug (1).
2. Plug in plug (2).

END OF TASK

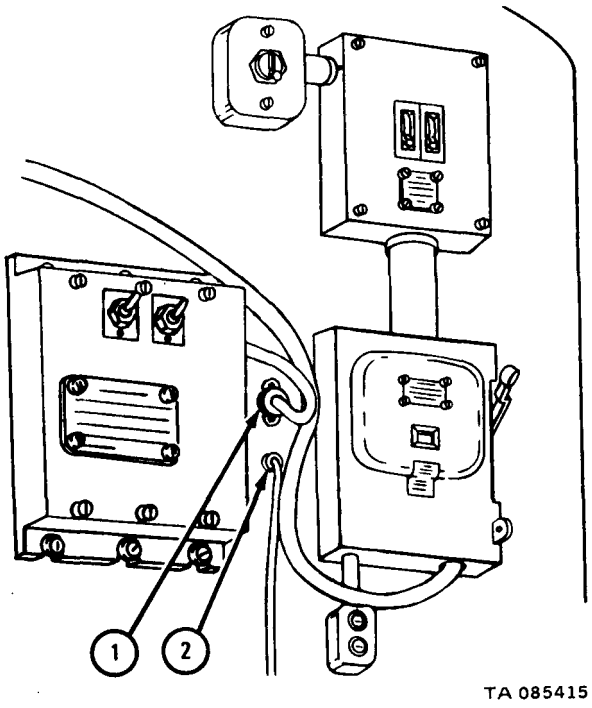

17-38. REAR DOOR HINGES REMOVAL AND REPLACEMENT (TRUCKS M109A2 and M109A3).

TOOLS: No special tools required

SUPPLIES: Rivet (20)

PERSONNEL: One

EQUIPMENT CONDITION: Truck parked, engine off, handbrake set.

a. Preliminary Procedures.

(1) Remove van door assembly. Refer to TM 9-2320-209-20.

(2) Remove exhaust blower assembly. Refer to TM 9-2320-209-20.

b. Removal.

FRAME 1

1. Working at left rear of truck, drive out ten rivet caps (1) along side panel (2).
2. Drill and take out ten rivets (3).
3. Take out 14 screws (4) across top and bottom of panel (2) and down side next to wall (5). Take off panel.
4. Do steps 1 and 2 again for right rear panel.

GO TO FRAME 2

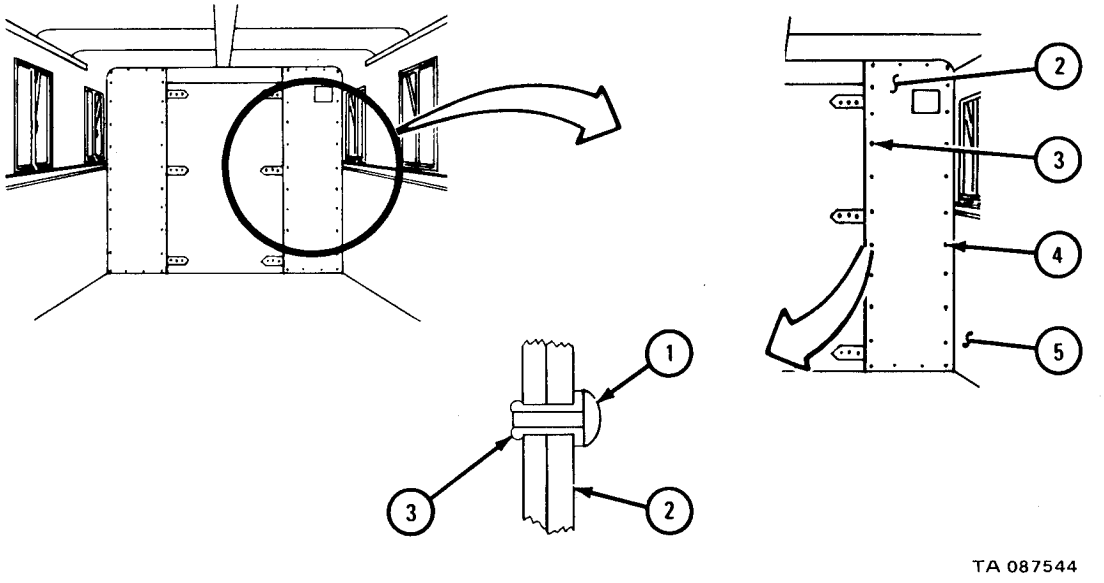

FRAME 2

1. Working at left rear of truck, take out insulation (1).

NOTE

Mark three hinges (2) before taking them off so they will be put back in the right place.

2. Take off nine nuts (3), nine capscrews (4). Take off three hinges (2).
3. Do steps 1 and 2 again to take off three hinges (5).

END OF TASK

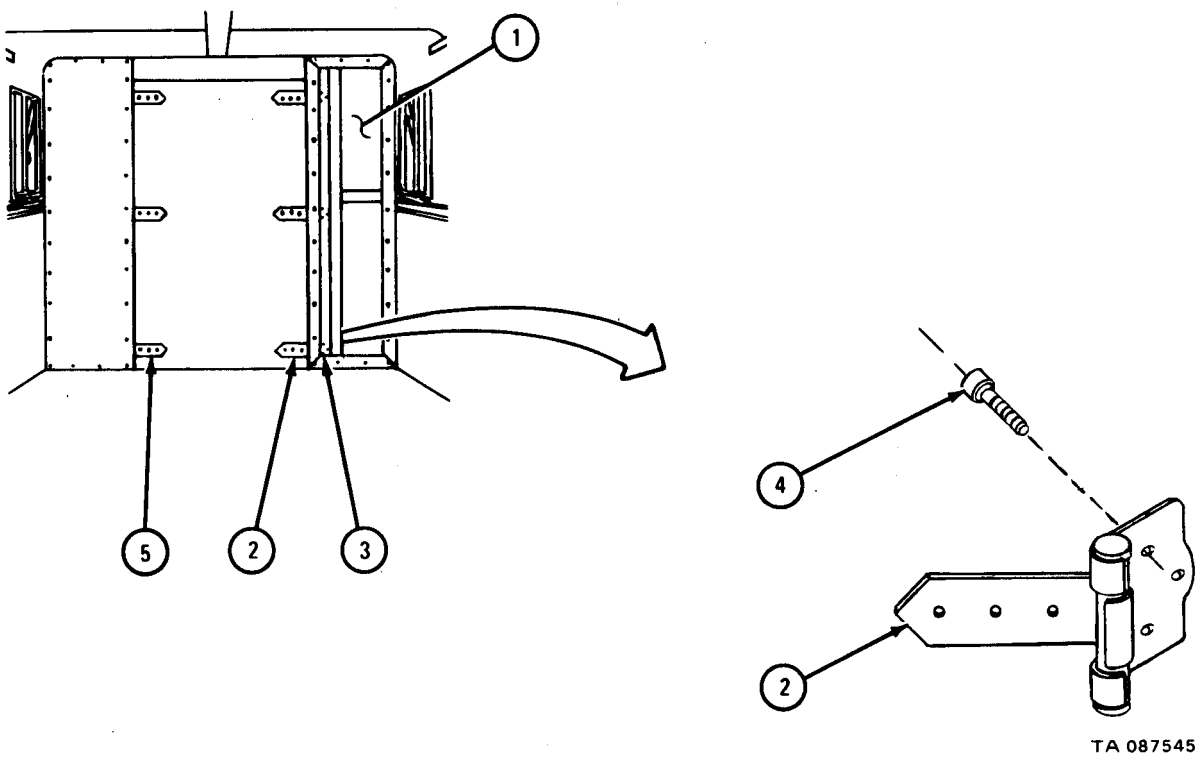

c. Replacement.

FRAME 1

1. Working on left rear of truck put three hinges (1) in place and aline screw holes.
2. Put in nine screws (2) and nine nuts (3).
3. Put in insulation (4).
4. Do steps 1 through 3 again to put on other three hinges (5).

GO TO FRAME 2

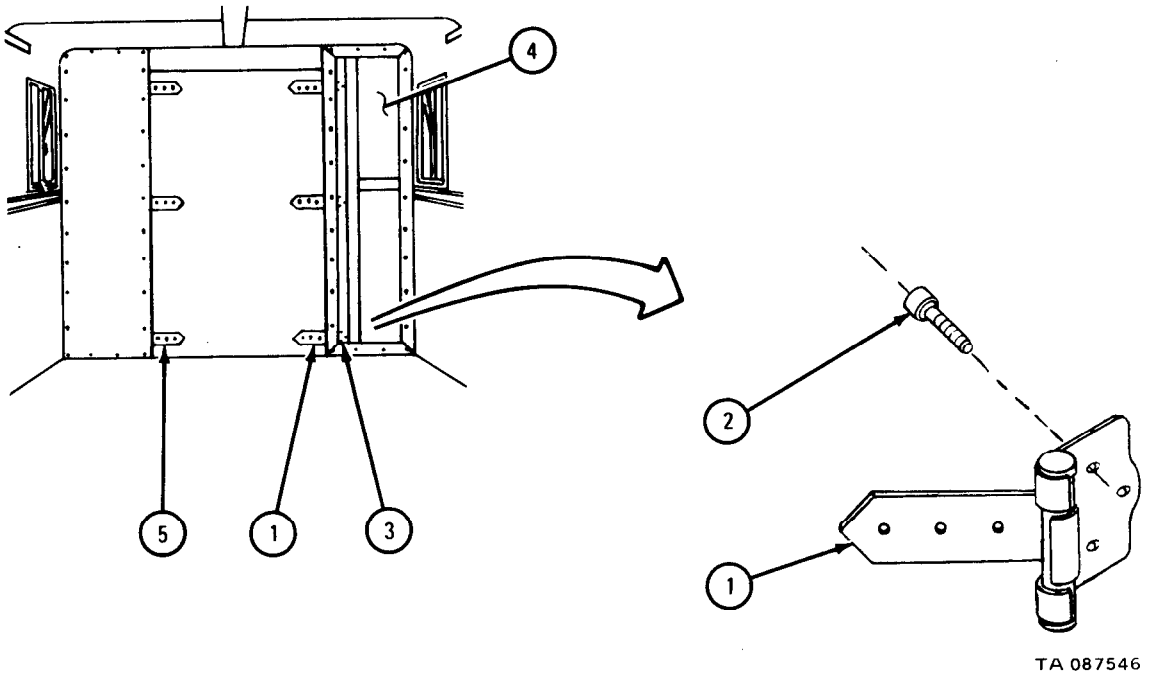

FRAME 2

1. Working on left rear of truck, put panel (1) in place and aline screw holes.
2. Put in and tighten 14 screws (2) across top and bottom of panel (1) and down side next to wall (3).
3. Put in 10 3/16-inch rivets (4) along panel (1).
4. Do steps 1 through 3 again for right rear panel.

NOTE

Follow-on Maintenance Action Required:

1. Put on exhaust blower assembly. Refer to TM 9-2320-209-20.
2. Put on van door assembly. Refer to TM 9-2320-209-20.

END OF TASK

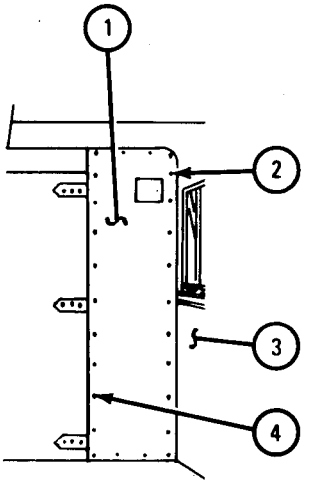

TA 087547

17-39. FRONT SASH ASSEMBLY REMOVAL, REPAIR, AND REPLACEMENT (TRUCKS M109A2, M109A3, M185A2, AND M185A3).

TOOLS: No special tools required

SUPPLIES: Rubber cement. MMM-A-139
Weatherstrip
Solvent, dry cleaning, type II (SD-2), Fed. Spec P-D-680
Clean lint-free cloth
Soapy water

PERSONNEL: One

EQUIPMENT CONDITION: Truck parked, engine off, handbrake set.

Preliminary Procedure. Fold back canvas cab cover. Refer to Cab Cover Removal and Replacement, TM 9-2320-209-10.

b. Removal.

FRAME 1

1. Slide open blackout panel (1).
2. Take out eight screws (2) from upper and lower guides (3 and 4).
3. Take off upper and lower guides (3 and 4) and blackout panel (1).
4. Take out 18 screws (5). Take out sash assembly (6).

END OF TASK

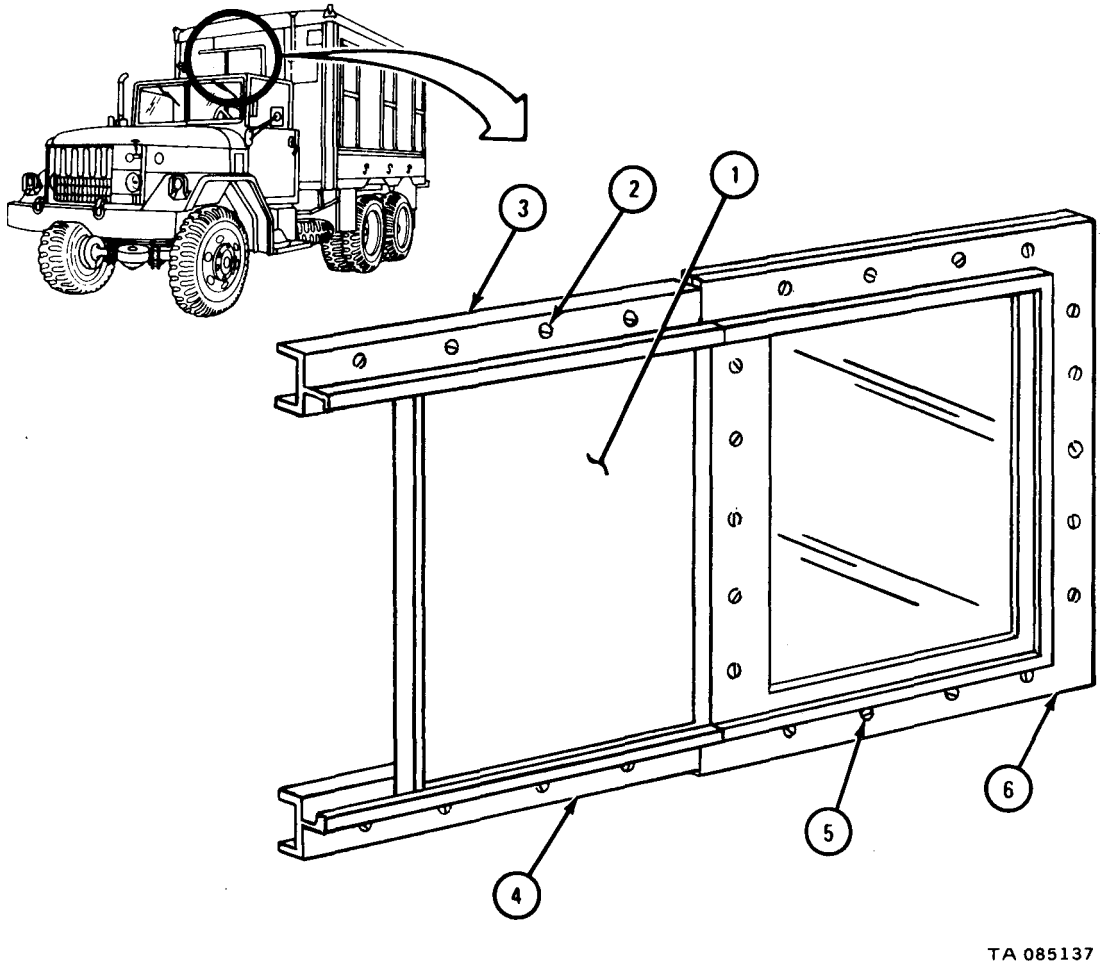

c. Disassembly.

FRAME 1

1. Take out 22 screws (1).
2. Spread apart frames (2 and 3). Take out weatherstrip (4) and window (5). Throw away weatherstrip.

END OF TASK

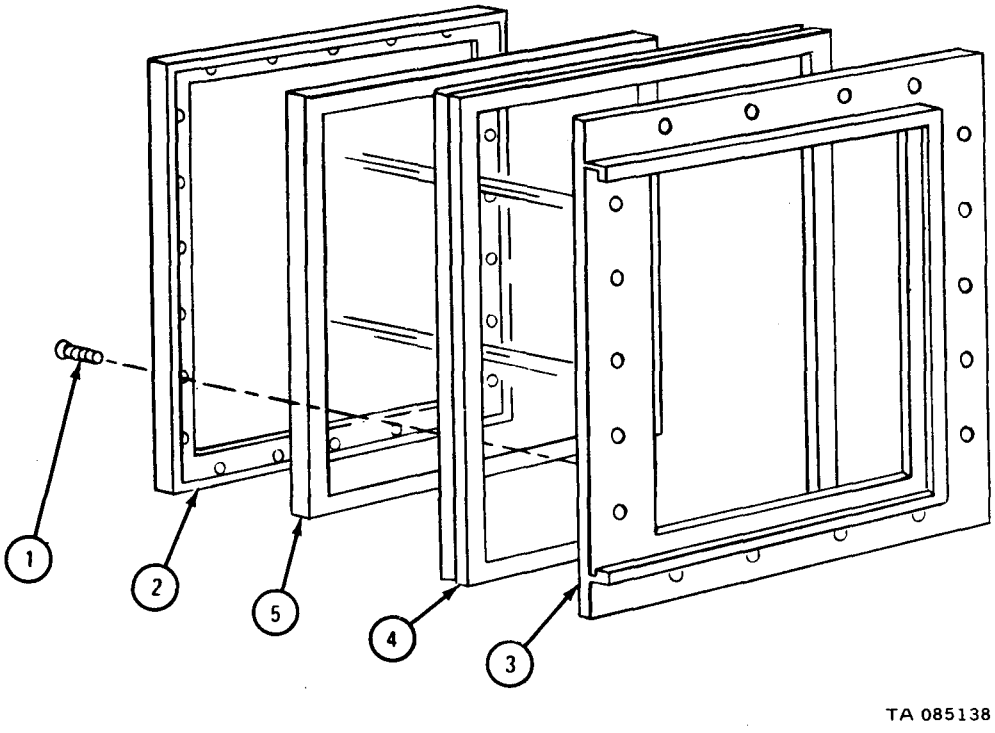

d. Cleaning.

WARNING

Dry cleaning solvent is flammable. Do not use near an open flame. Keep a fire extinguisher nearby when solvent is used. Use only in well-ventilated places. Failure to do this may result in injury to personnel and damage to equipment. Eye injury can occur if eye shields are not used.

(1) Clean all metal parts in solvent. Let parts dry.

(2) Clean windows and insulators with soap and water. Dry window with clean lint-free cloth.

e. Inspection and Repair.

FRAME 1

1. Check that blackout panel (1) and guides (2 and 3) have no bends, dents or cracks. Repair by straightening or welding. Refer to TM 9-237. If more repair is needed, get new part.

GO TO FRAME 2

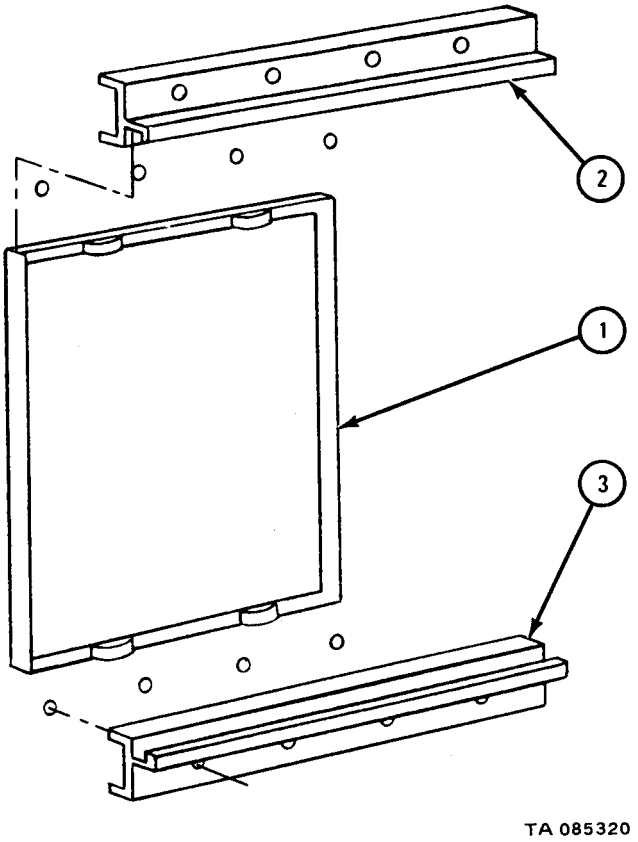

FRAME 2

1. Check that window (1) has no cracks or breaks in glass. If window is damaged, *get* a new piece of glass.
2. Check that frames (2 and 3) have no bends, dents or cracks. Repair damage by straightening or welding. Refer to TM 9-237. If more repair is needed, get a new part.

END OF TASK

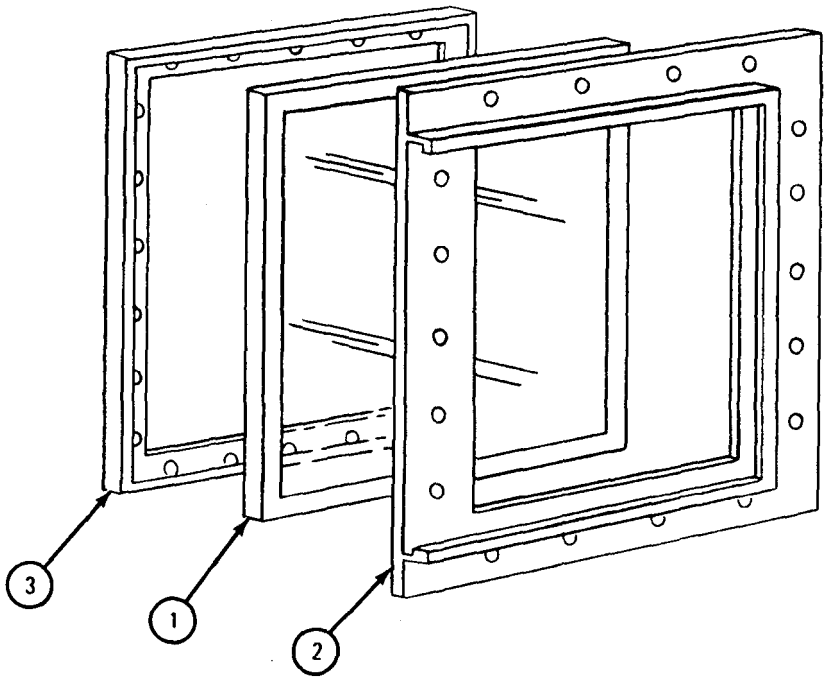

TA 085321

f. Assembly.

FRAME 1

1. Using rubber cement, put weatherstrip (1) on window (2).
2. Put window (2) between frames (3 and 4).
3. Put in 22 screws (5).

END OF TASK

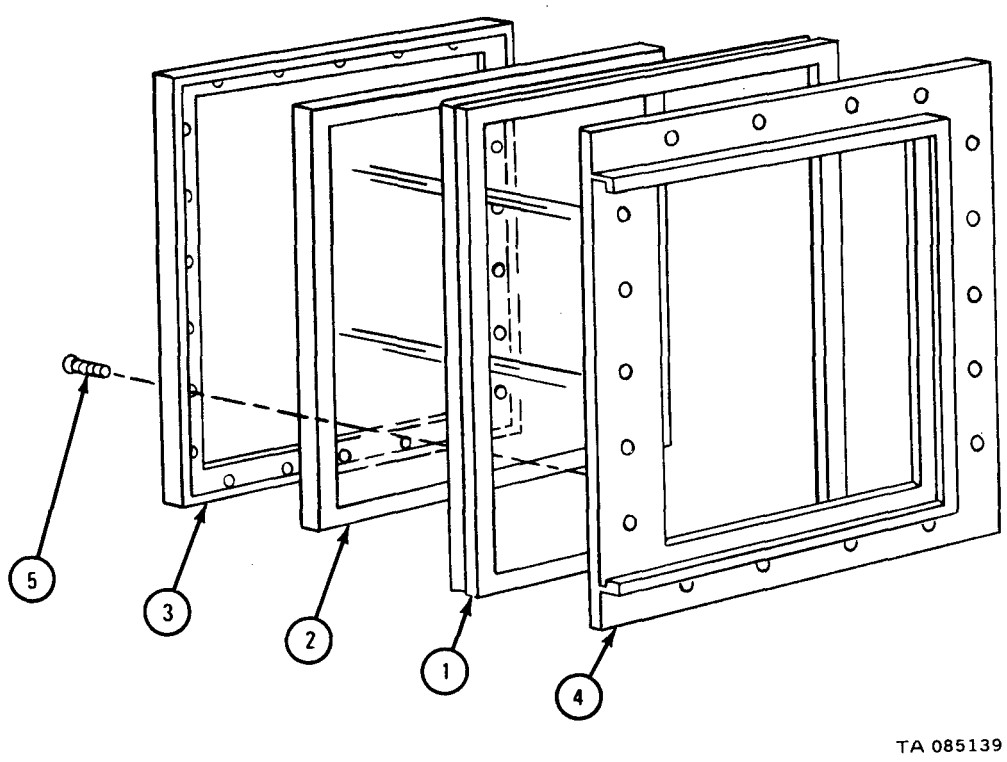

g. Replacement.

FRAME 1

1. Put sash assembly (1) in place. Put in 18 screws (2).
2. Put blackout panel (3) and guides (4 and 5) in place.
3. Put in eight screws (6) in guides (4 and 5).
4. Close blackout panel (3).

NOTE

Follow-on Maintenance Action Required:

Replace canvas cover. Refer to Cab Cover Removal and Replacement, TM 9-2320-209-10.

END OF TASK

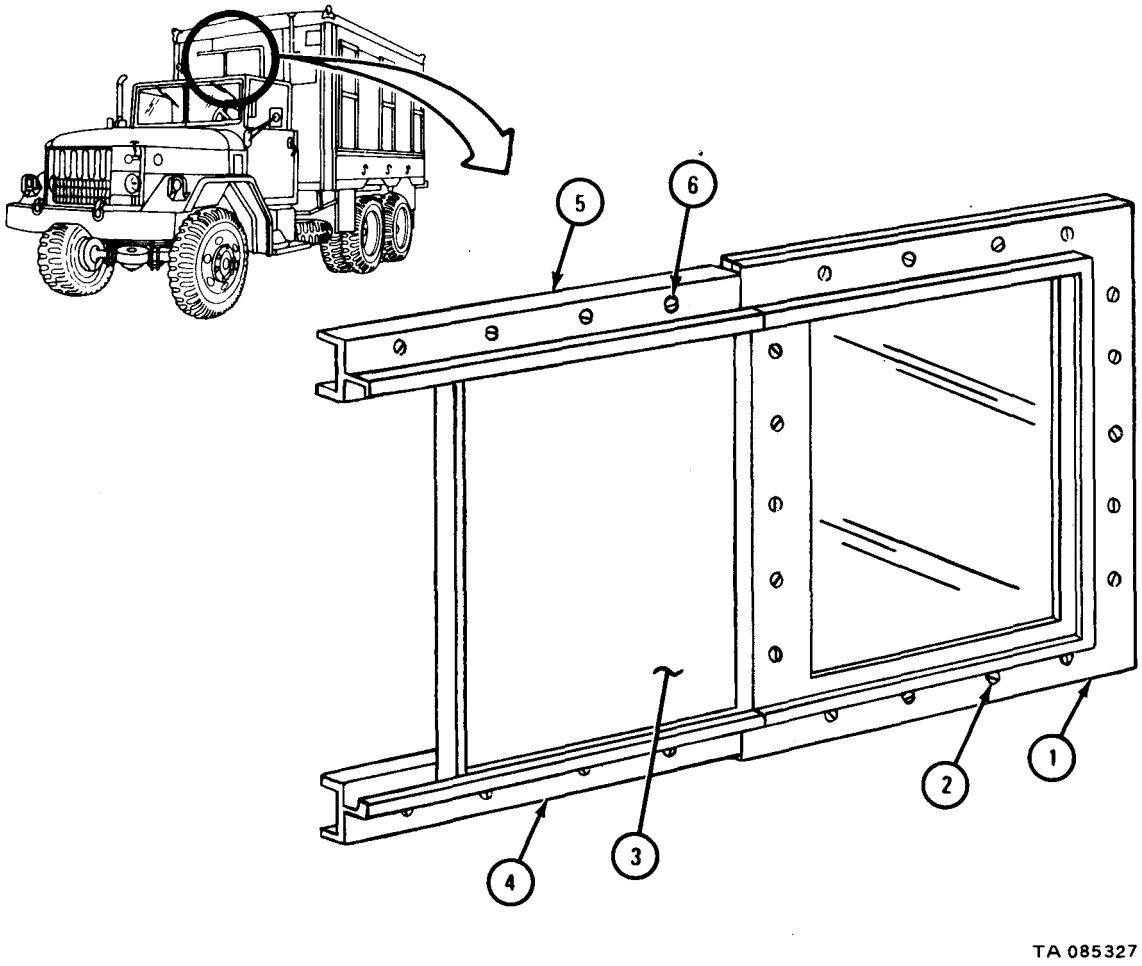

17-40. SIDE SASH WITH PANEL AND WINDOW ASSEMBLY REMOVAL, REPAIR, AND REPLACEMENT (TRUCKS M185A2, M185A3, M109A2, AND M109A3).

NOTE

This task is the same for all side sash and window assemblies.

TOOLS: No special tools required

SUPPLIES: Rubber cement
Solvent, dry cleaning, type II (50-2), Fed. Spec P-D-680
Lint-free cloth
Soapy water

PERSONNEL: One

EQUIPMENT CONDITION: Truck parked, engine off, handbrake set.

a. Removal.

FRAME 1

1. Spread open ends and take off ring (1).
2. Take out 18 screws and washers (2).
3. Take out screen (3).

GO TO FRAME 2

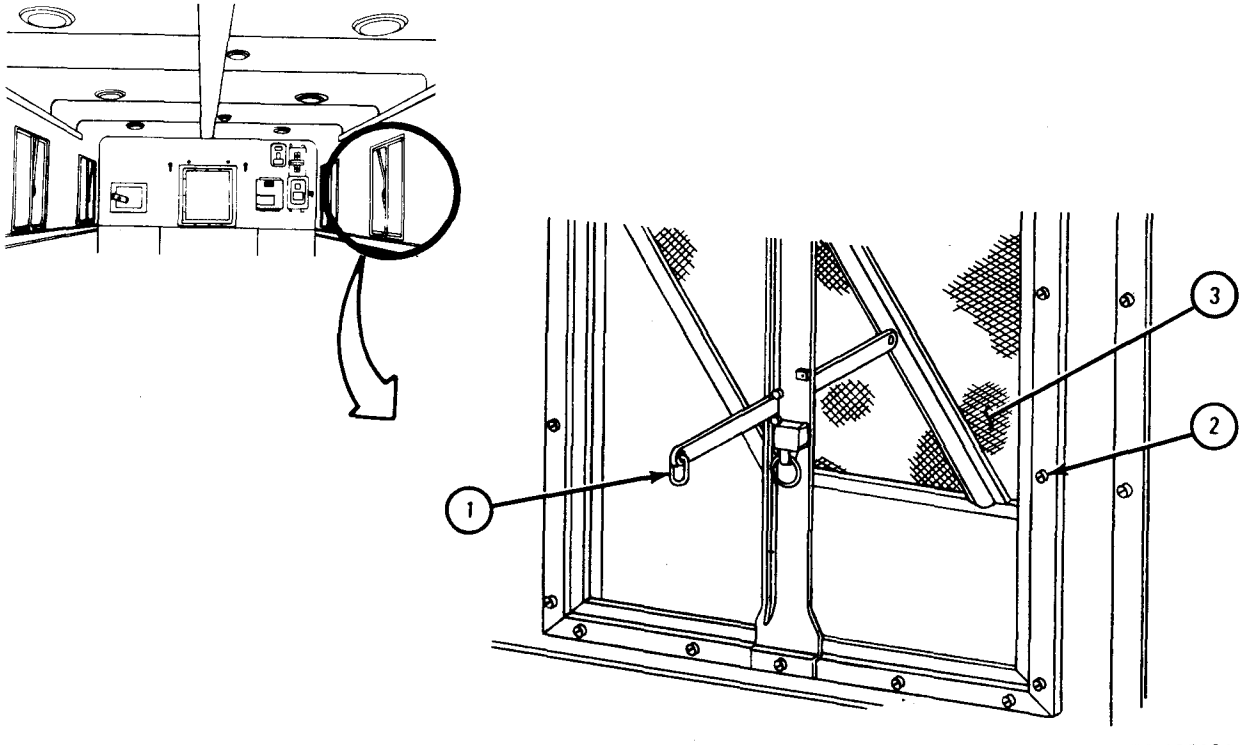

FRAME 2

1. Working outside van, pull down black out panel (1).
2. Take out 10 screws and lockwashers (2) from lower left and right guides (3 and 4). Take off guides and blackout panel (1).

GO TO FRAME 3

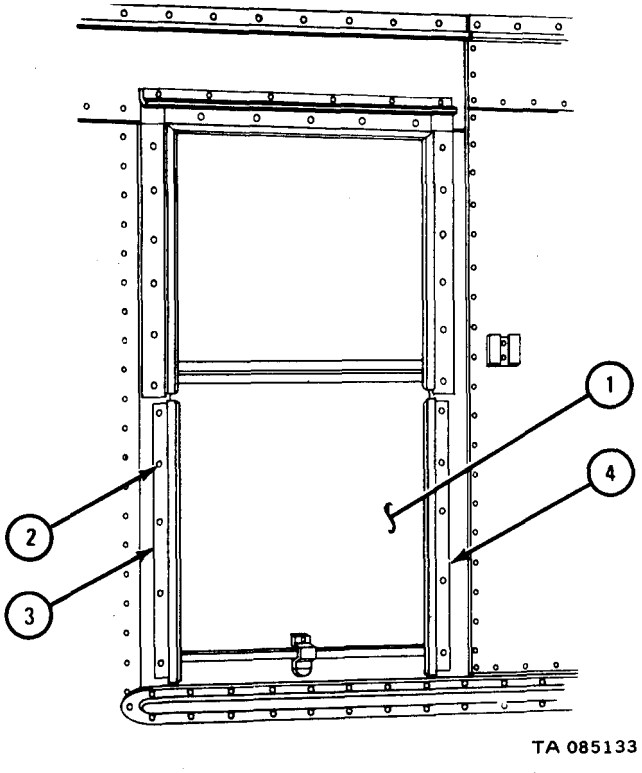

FRAME 3

1. Take out six screws (1).
2. Take off window sash (2).

END OF TASK

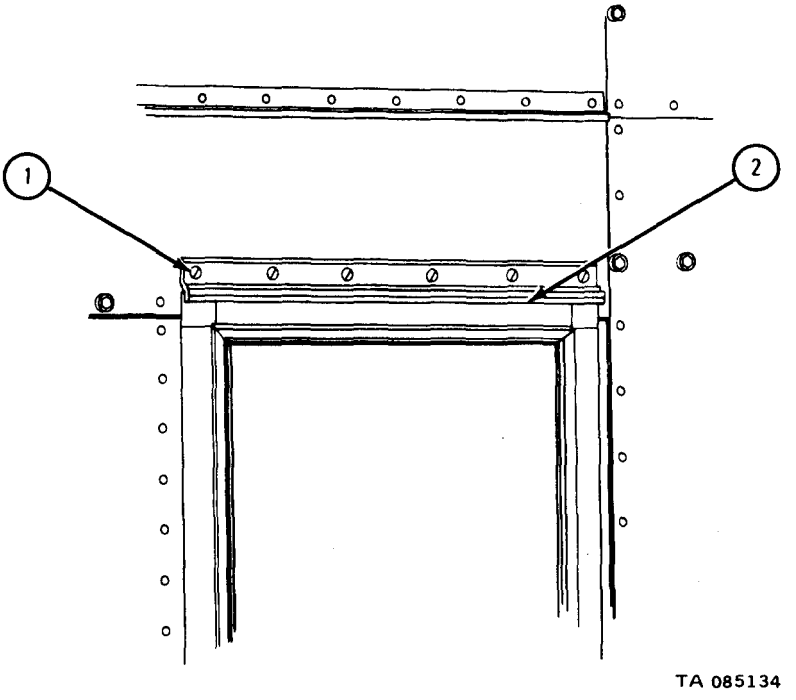

b. Disassembly.

FRAME 1

1. Take out 22 screws (1).
2. Spread frames (2) apart.
3. Take off and throw out weather strip (3).
4. Take out window (4).
5. Take out and throw away glazing strip (5).

END OF TASK

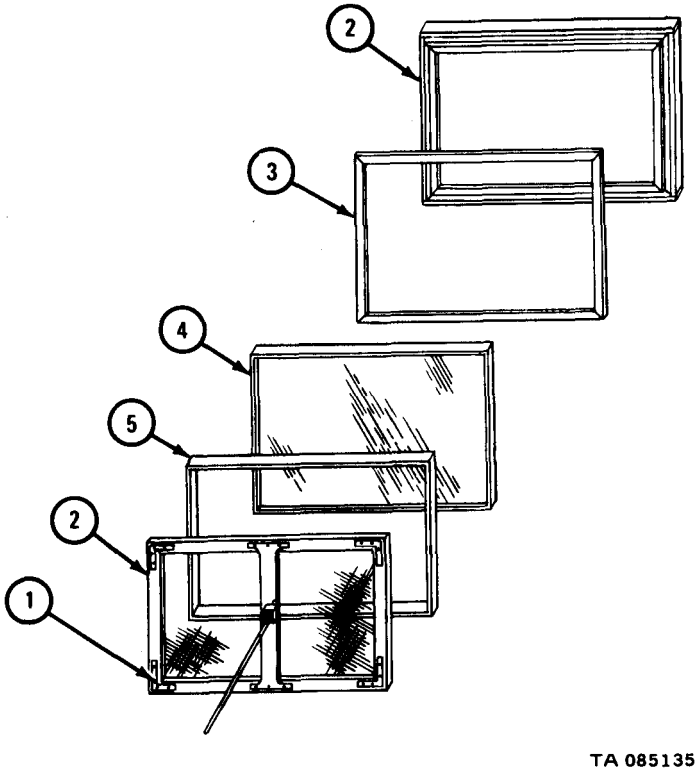

c. Cleaning. There are no special cleaning procedures required. Refer to cleaning procedures given in Part 1, para 1-3.

d. Inspection and Repair.

FRAME 1

1. Check that screen (1) has no holes or bent wires. If screen is damaged, patch with piece of screen at least two inches larger than damaged spot.
2. Check that blackout panel (2) and two guides (3) are not bent, cracked or damaged. Fix damaged parts by welding or get new parts in their place.
3. Check that window (4) is not damaged. If parts are damaged, get new ones in their place.

END OF TASK

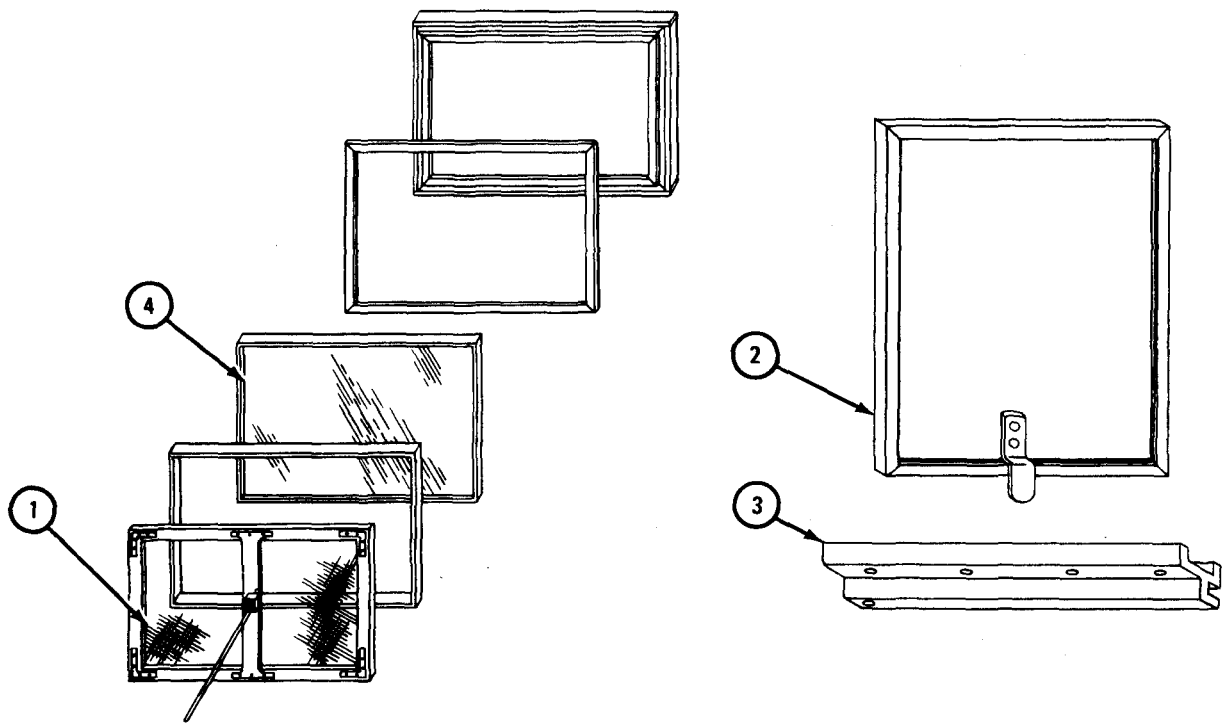

NOTE: CHECK ONLY THOSE PARTS WHICH ARE CALLED OUT. PARTS WITHOUT CALLOUTS ARE SHOWN ONLY FOR REFERENCE PURPOSES.

TA 085314

e. Assembly.

FRAME 1

1. Put glazing strip (1) on window (2).
2. Using rubber cement, put weatherstrip (3) on frame (4).
3. Put window (2) between frames (4 and 5).
4. Put in 22 screws (6).

END OF TASK

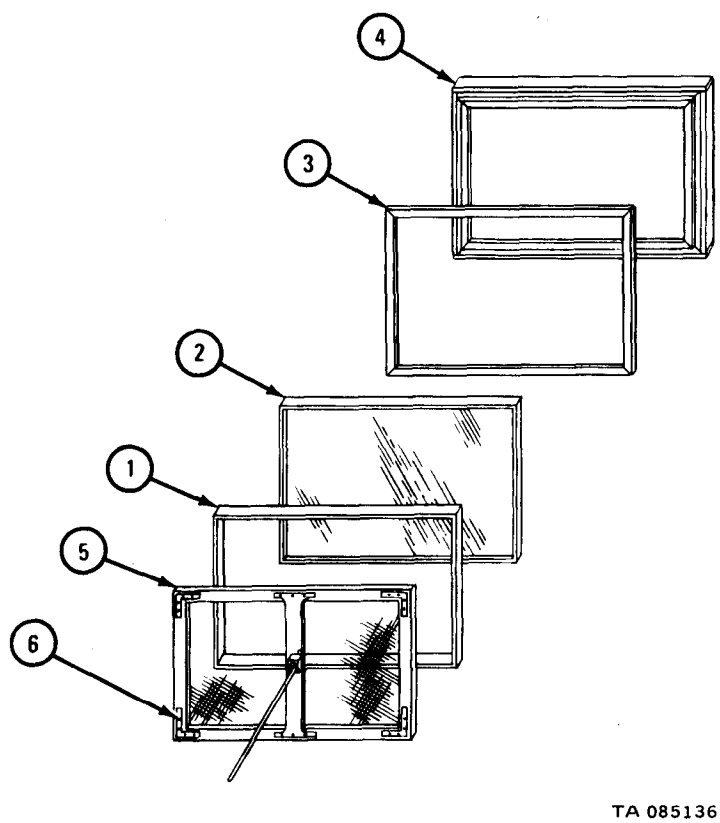

f. Replacement.

FRAME 1

1. Put sash and frame (1) in place.
2. Put in six screws (2).

GO TO FRAME 2

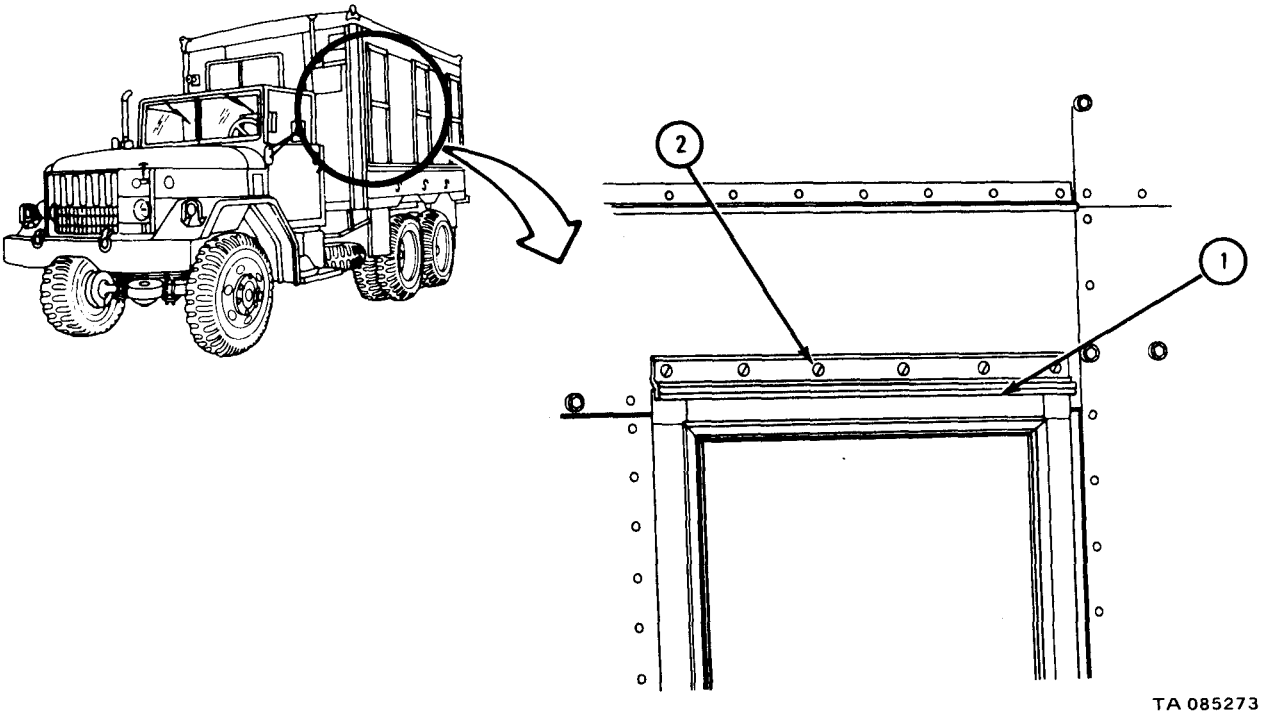

FRAME 2

1. Put blackout panel (1) and lower left and right guides (2 and 3) in place. Put in 10 screws and lockwashers (4).
2. Push up blackout panel (1).

GO TO FRAME 3

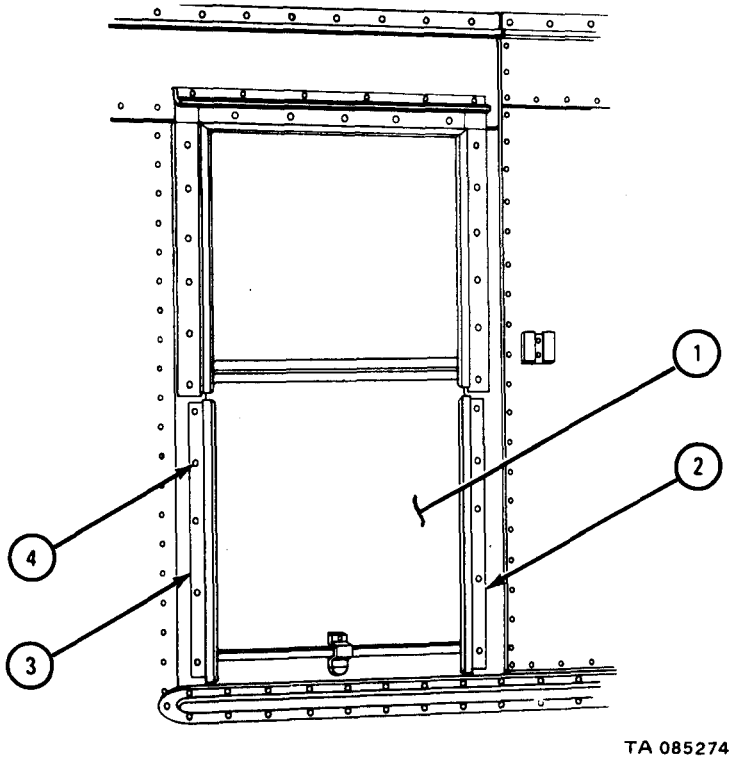

FRAME 3

1. Working inside van, put in screen (1).
2. Put in 18 screws and washers (2).
3. Put on and close up ends of ring (3).

END OF TASK

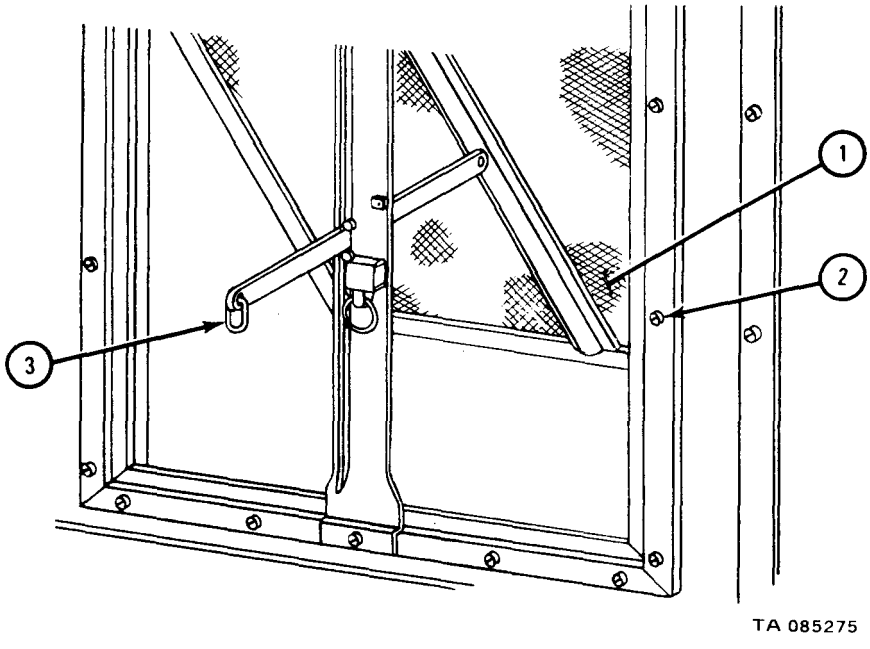

17-41. LIFTING SHACKLE REMOVAL, REPAIR, AND REPLACEMENT (TRUCKS M109A2, M109A3, M185A2, AND M185A3).

TOOLS: No special tools required

SUPPLIES: Solvent, dry cleaning, type II (SD-2), Fed. Spec P-D-680
Cotter pin

PERSONNEL: Two

EQUIPMENT CONDITION: Truck parked, engine off, handbrake set.

a. Preliminary Procedures.

(1) Disconnect battery ground cable. Refer to TM 9-2320-209-20.

(2) Remove external power cable. Refer to Operation of Shop Van and Instrument Repair Shop Van Trucks, TM 9-2320-209-10.

(3) Remove dome light and fixture. Refer to TM 9-2320-209-20.

b. Left Front Lifting Shackle.

(1) Removal.

FRAME 1

Soldier A	1.	Take out 18 screws (1) around inner window frame (2).
	2.	Take off clip (3) and take off inner window frame (2).
Soldier B	3.	Hold center ceiling panel (4).
Soldier A	4.	Take out 20 screws (5).
Soldier B	5.	Let center ceiling panel (4) down.
	6.	Hold left front ceiling panel (6).
Soldier A	7.	Take out 17 screws (7).
Soldiers A and B	8.	Take down left front ceiling panel (6).

GO TO FRAME 2

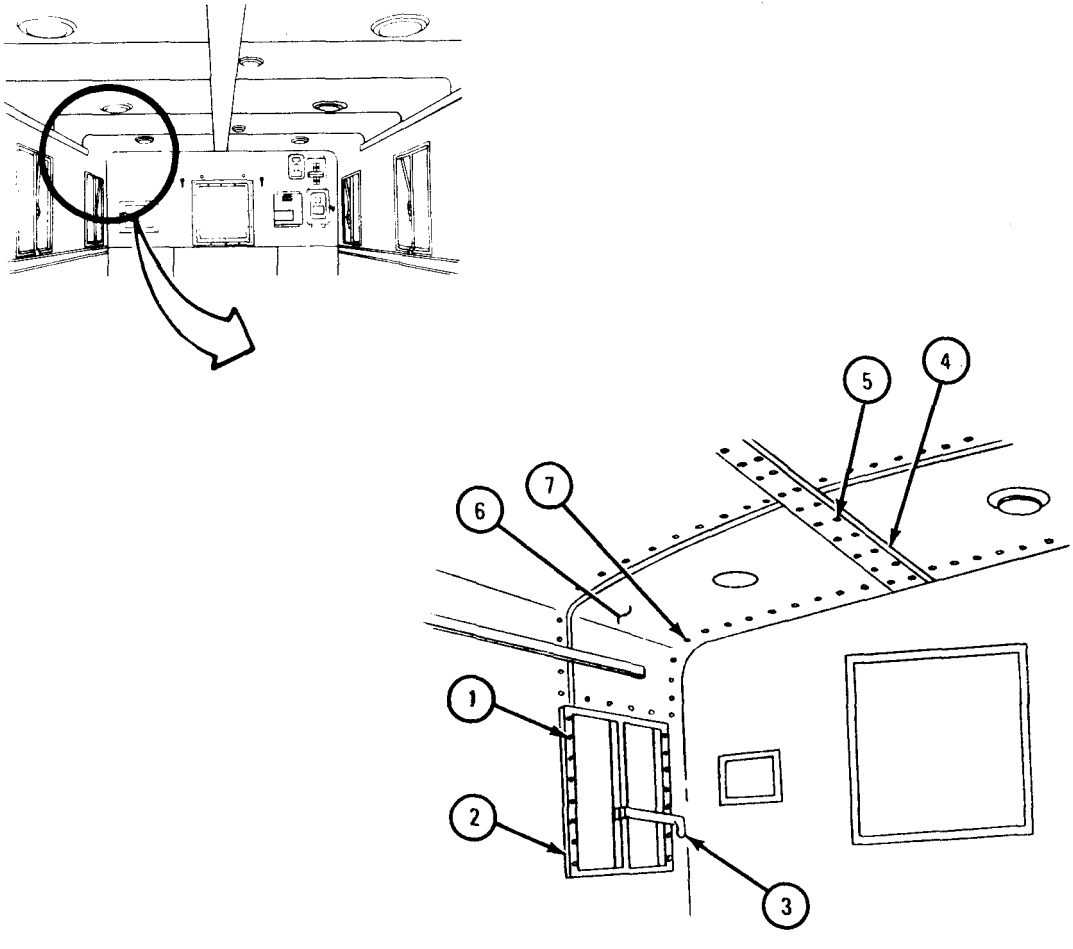

FRAME 2

Soldier A 1. Take out five screws (1) from front panel (2).

2. Pull back front panel (2) and hold three nuts (3).

Soldier B 3. Take out three screws and lockwashers (4). Take off lifting shackle (5).

END OF TASK

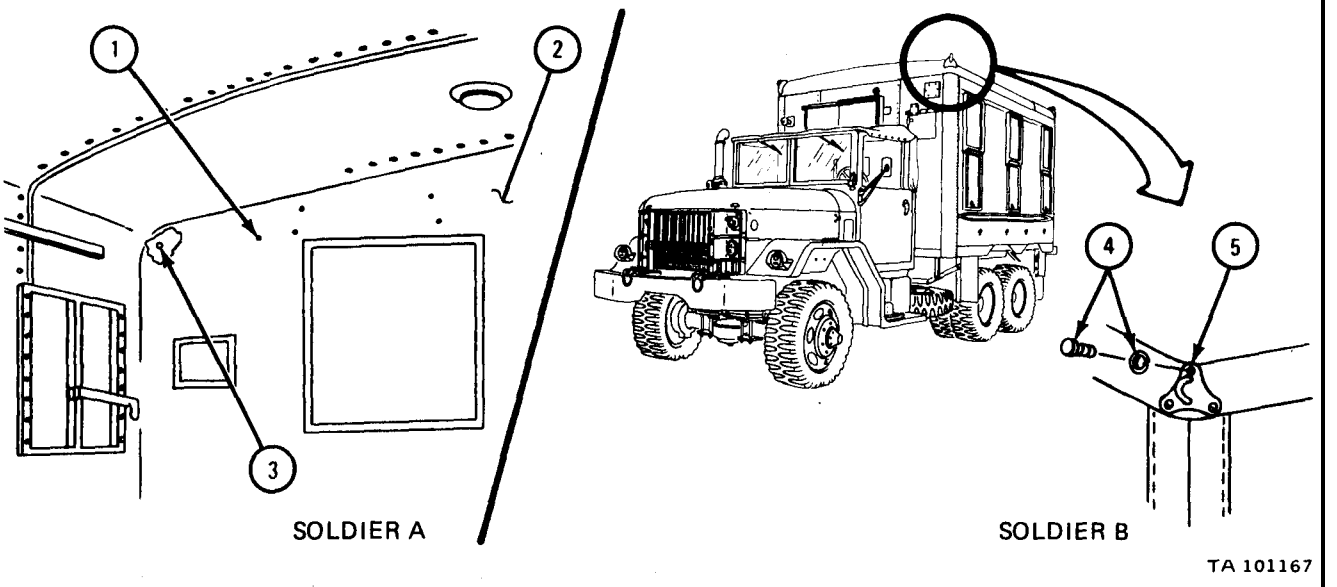

(2) Disassembly,

FRAME 1

1. Take out cotter pin (1) from shackle pin (2). Throw away cotter pin (1).
2. Take out shackle pin (2) and take off shackle (3).

END OF TASK

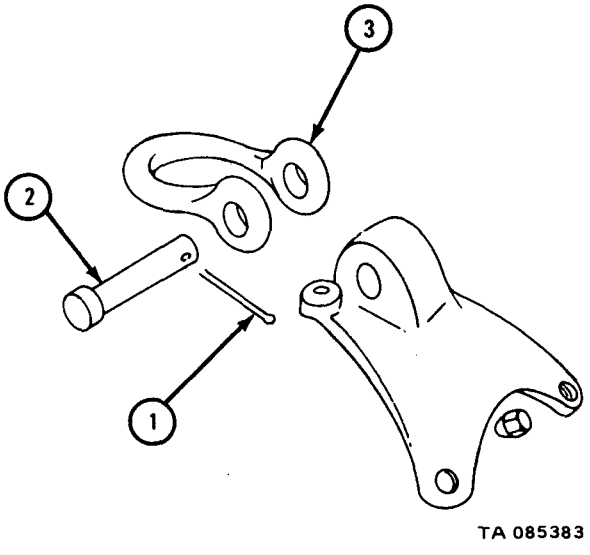

(3) Cleaning, inspection, and repair.

WARNING

Dry cleaning solvent is flammable. Do not use near an open flame. Keep a fire extinguisher nearby when solvent is used. Use only in well-ventilated places. Failure to do this may result in injury to personnel and damage to equipment.

(a) Cleaning. Using dry cleaning solvent, clean all parts. Use a stiff brush if needed. After cleaning, use cold water to rinse off any solvent.

(b) Inspection. Check that all parts have no cracks, breaks or distortion.

(c) Repair. Weld any cracks or breaks found in inspection. Refer to TM 9-237. Hammer out any bends or dents. Refer to FM 43-2.

(4) Assembly.

FRAME 1

1. Aline shackle (1) and shackle bracket (2). Put shackle pin (3) in place.
2. Put cotter pin (4) in shackle pin (3).

END OF TASK

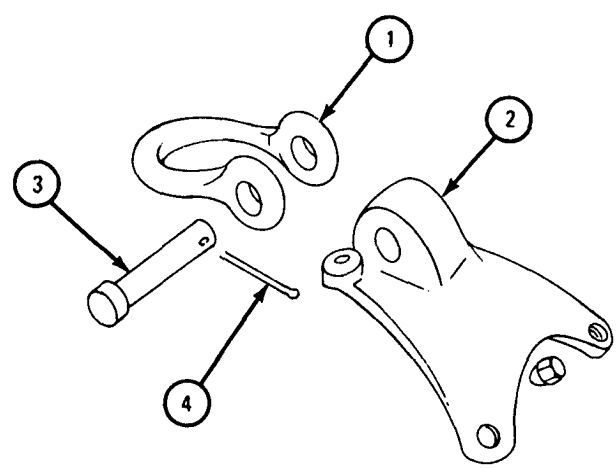

TA 085384

(5) Replacement.

FRAME 1

Soldier A 1. Put lifting shackle (1) in place.
2. Put in three screws and lockwashers (2).
Soldier B 3. Put on and hold three nuts (3).
Soldier A 4. Tighten three screws and lockwashers (2).
5. Put front panel (4) in place. Put in five screws (5).

GO TO FRAME 2

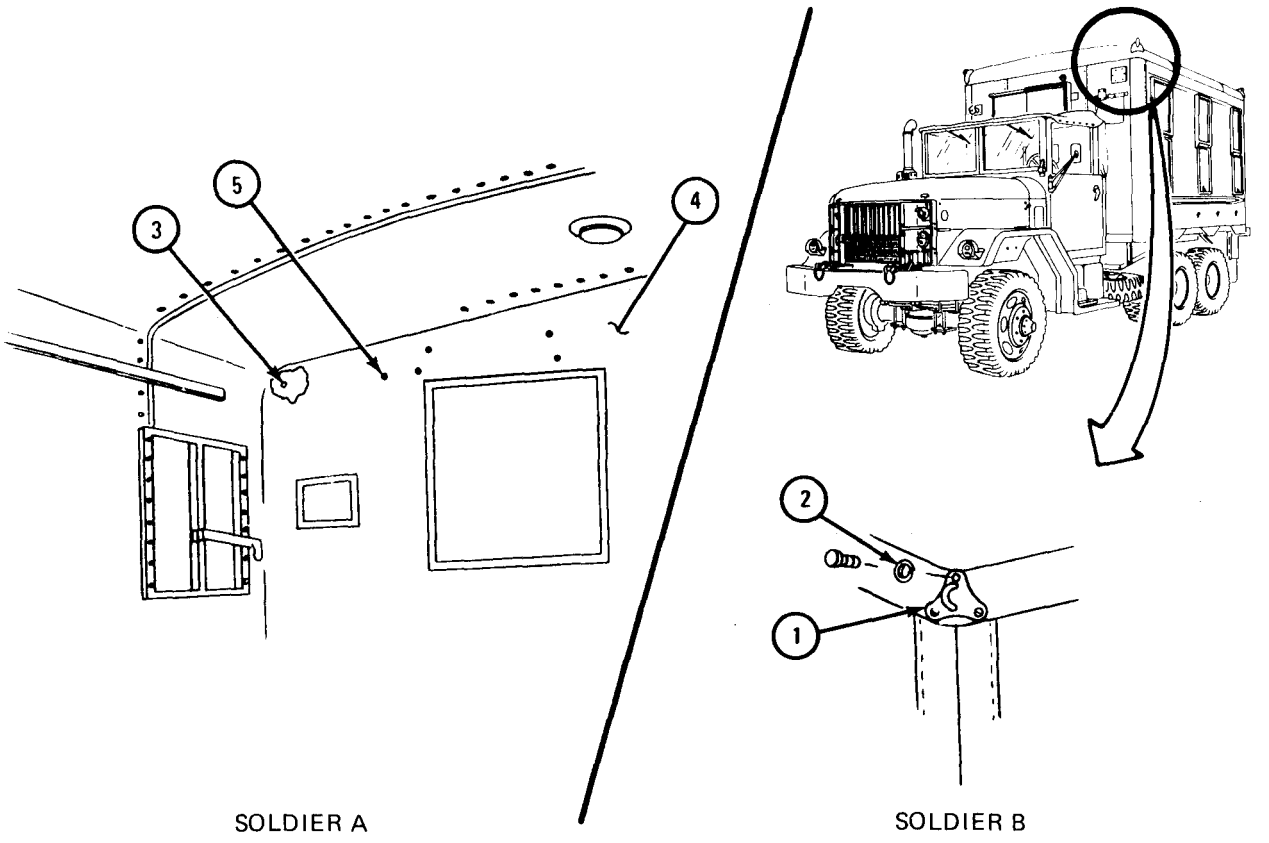

FRAME 2

Soldiers A and B	1. Put left front ceiling panel (1) in place.
Soldier B	2. Hold left front ceiling panel (1) up.
Soldier A	3. Put in 17 screws (2).
Soldier B	4. Hold center ceiling panel (3) up.
Soldier A	5. Put in 20 screws (4).
Soldier B	6. Put inner window frame (5) in place and hold it.
Soldier A	7. Put in 18 screws (6) around inner window frame (5).
	8. Put on clip (7).

NOTE

Follow-on Maintenance Action Required:

1. Replace dome light and fixture. Refer to TM 9-2320-209-20.
2. Reconnect battery ground cable. Refer to TM 9-2320-209-20.
3. Replace external power cable. Refer to Operation of Shop Van and Instrument Repair Shop Van Trucks, TM 9-2320-209-10.

END OF TASK

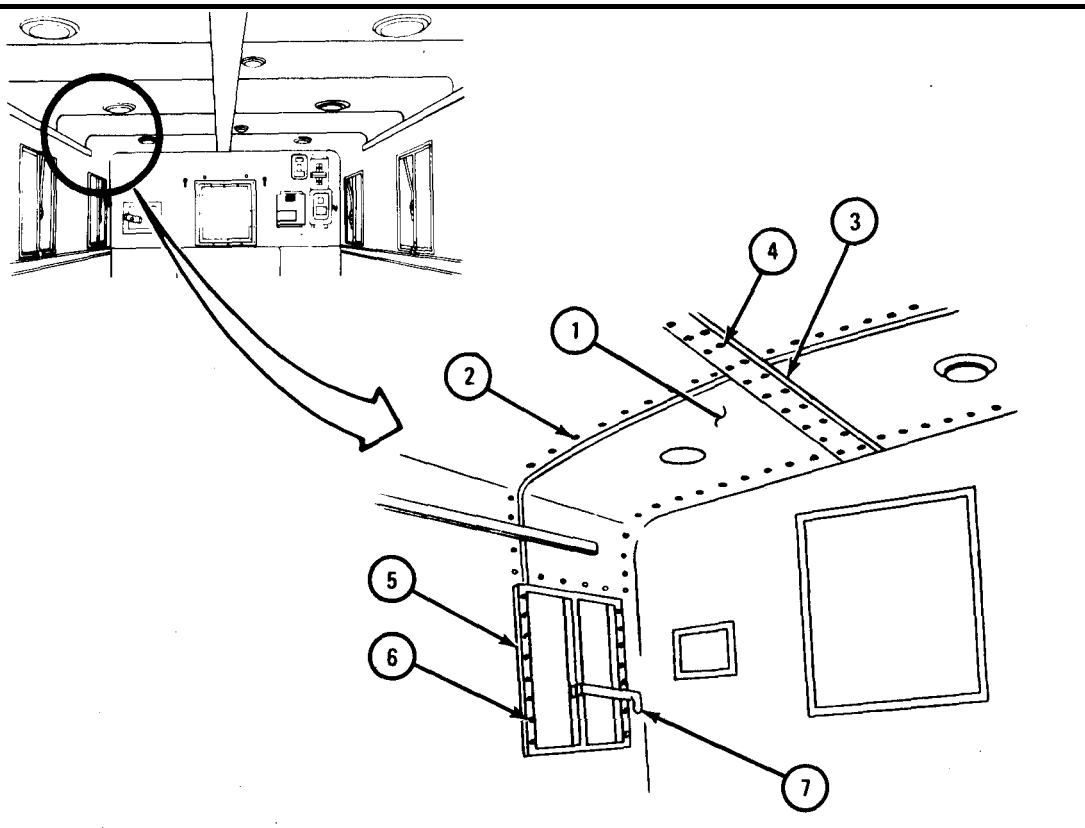

c. Right Front Lifting Shackle.

(1) Removal.

FRAME 1

Soldier A	1.	Take out 18 screws (1) around inner window frame (2).
	2.	Take off clip (3) and take off inner window frame (2).
Soldier B	3.	Hold center ceiling panel (4).
Soldier A	4.	Take out 20 screws (5).
Soldier B	5.	Let center ceiling panel (4) down.
	6.	Hold right front ceiling panel (6).
Soldier A	7.	Take out 16 screws (7).
Soldiers A and B	8.	Take down right front ceiling panel (6).

GO TO FRAME 2

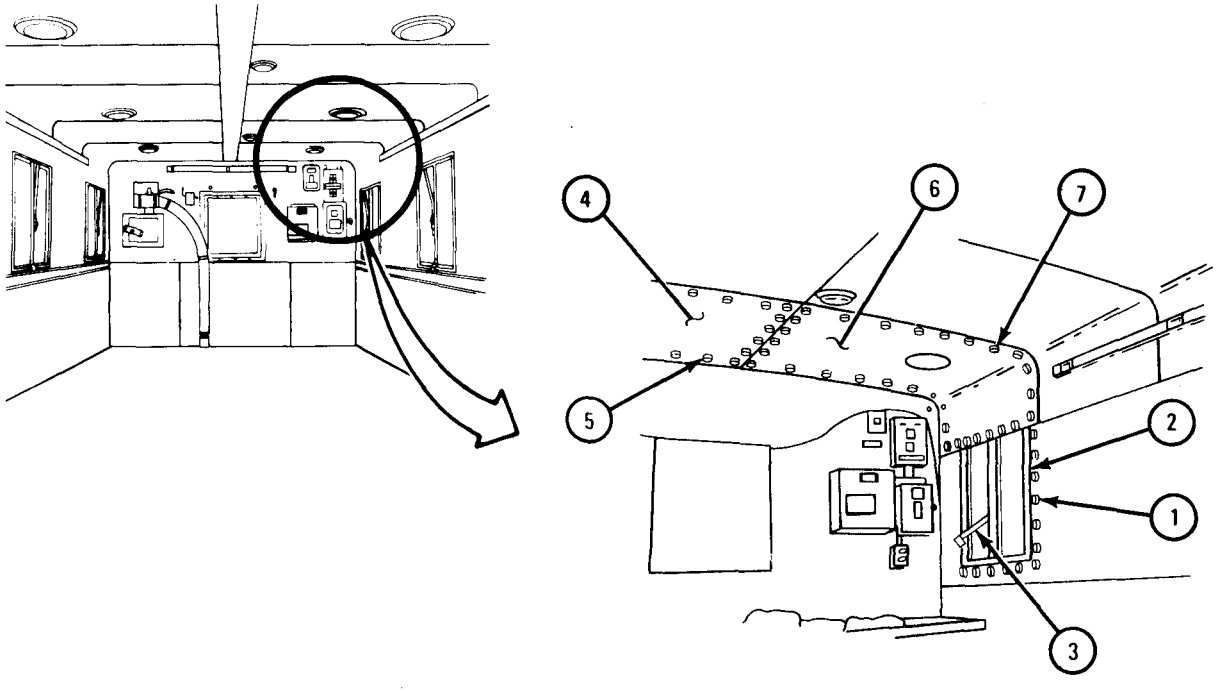

FRAME 2

Soldier A 1. Take out five screws (1). Pull back front panel (2).

2. Hold three nuts (3).

Soldier B 3. Take out three screws and lockwashers (4) and take off lifting shackle (5).

END OF TASK

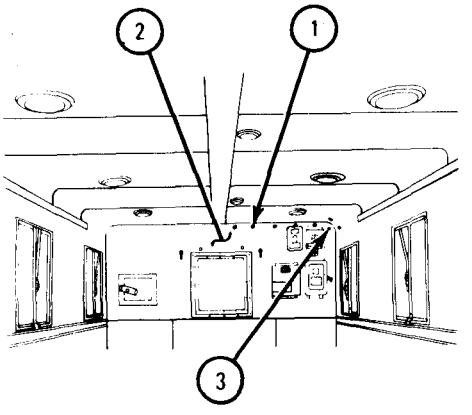

SOLDIER A

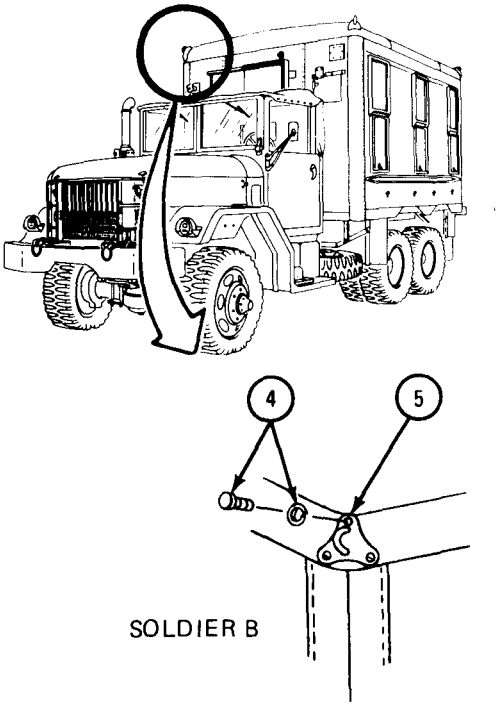

SOLDIER B

TA 101171

(2) Disassembly. Refer to para 17-41b (2).

(3) Cleaning, inspection and repair. Refer to para 17-41b (3).

(4) Assembly. Refer topara 17-41b (4).

(5) Replacement.

FRAME 1

Soldier A 1. Put lifting shackle (1) in place with three screws and lockwashers (2).

Soldier B 2. Put on and hold three nuts (3).

Soldier A 3. Tighten three screws and lockwashers (2).

4. Put front panel (4) in place. Put in five screws (5).

GO TO FRAME 2

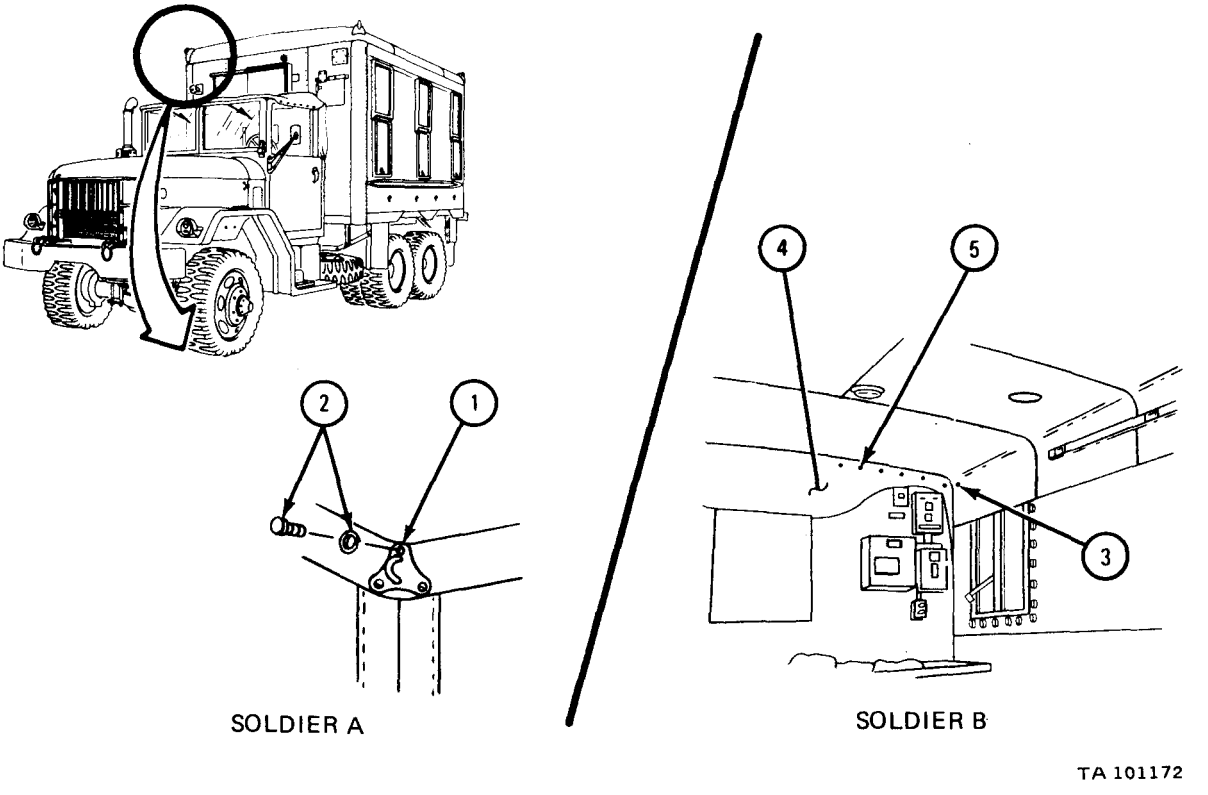

FRAME 2

Soldiers A and B 1. Put right front ceiling panel (1) in place.

Soldier B 2. Hold right front ceiling panel (1).

Soldier A 3. Put in 16 screws (2).

Soldier B 4. Hold center ceiling panel (3) up.

Soldier A 5. Put in 20 screws (4).

Soldier B 6. Put inner window frame (5) in place and hold it.

Soldier A 7. Put in 18 screws (6) around inner window frame (5).

8. Put on clip (7).

NOTE

Follow-on Maintenance Action Required:

1. Replace dome light and fixture. Refer to TM 9-2320-209-20.
2. Reconnect battery ground cable. Refer to TM 9-2320-209-20.
3. Replace external power cable. Refer to Operation of Shop Van and Instrument Repair Shop Van Trucks, TM 9-2320-209-10.

END OF TASK

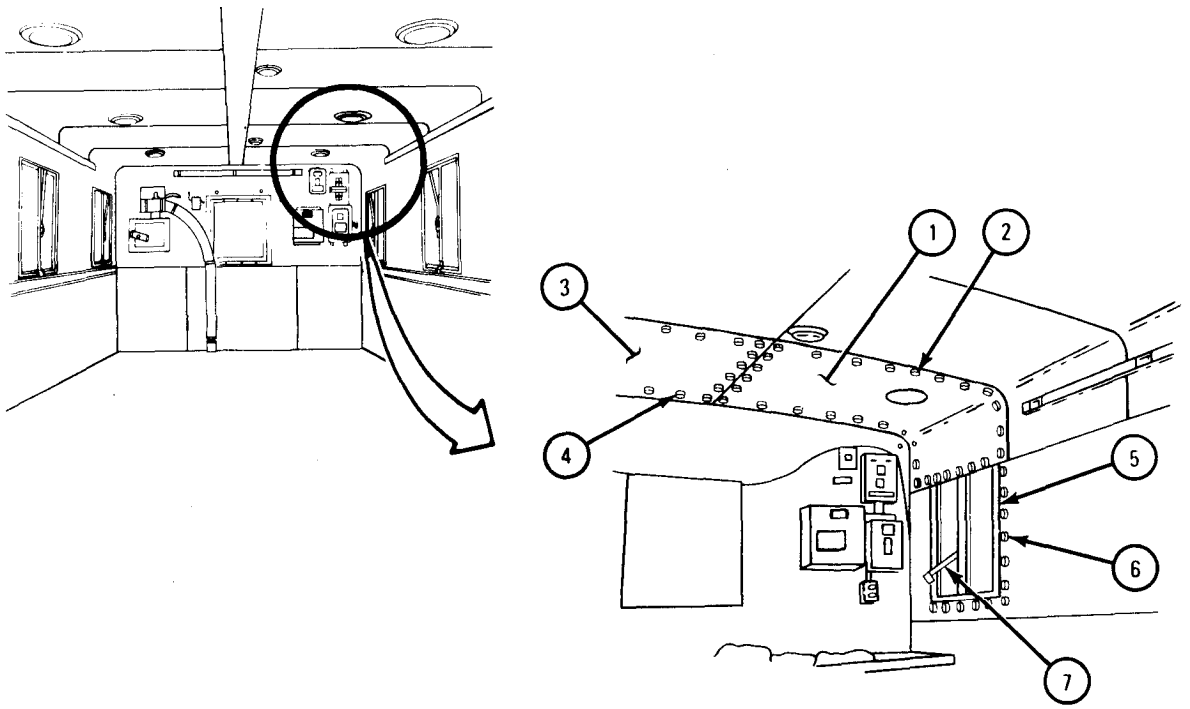

d. Right Rear Lifting Shackle.

(1) Removal.

FRAME 1

Soldier A	1.	Take out 18 screws (1) around inner window frame (2).
	2.	Take off clip (3) and take off inner window frame (2).
Soldier B	3.	Hold center ceiling panel (4) up.
Soldier A	4.	Take out 20 screws (5).
Soldier B	5.	Let center ceiling panel (4) down.

GO TO FRAME 2

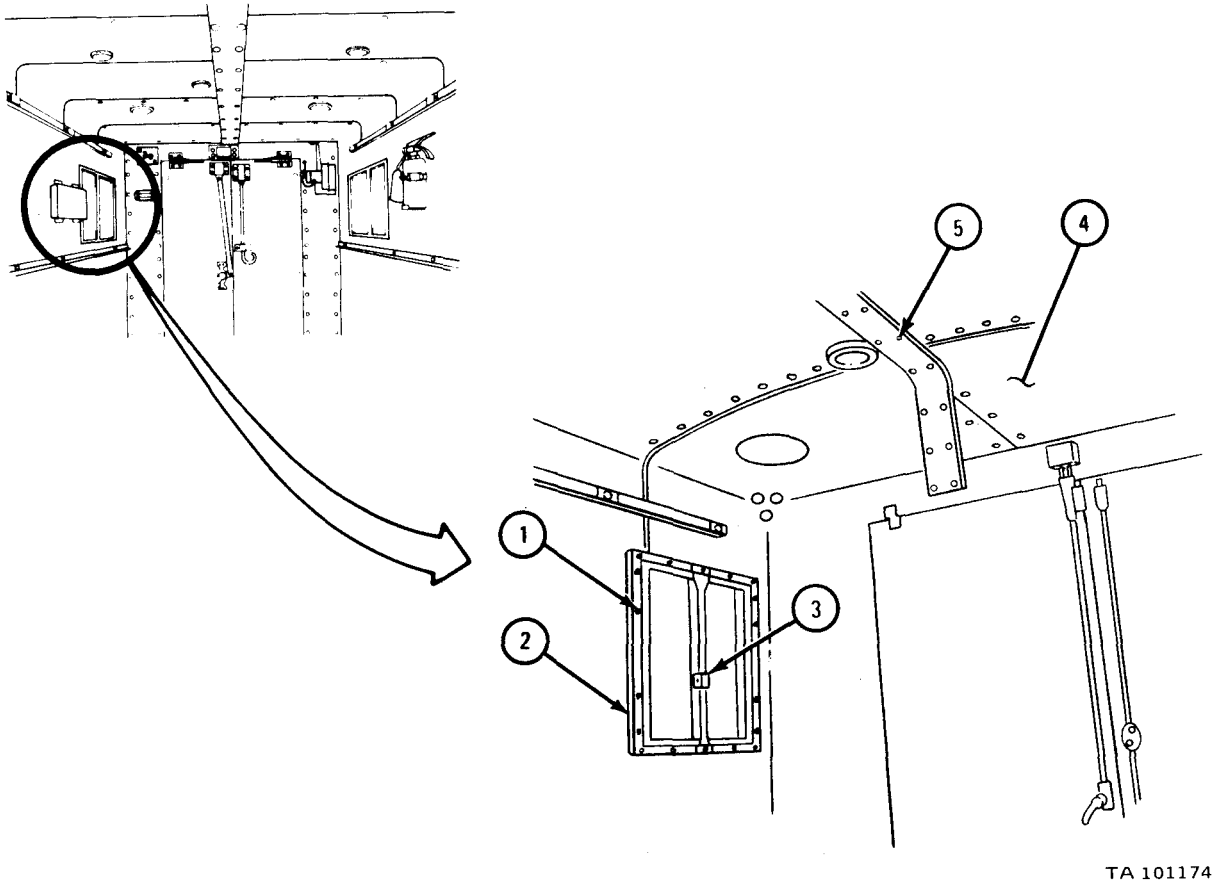

FRAME 2

1. Take out four screws (1).
2. Take off two clips (2).
3. Take off two terminal strip cover plates (3).
4. Take out two screws (4).

GO TO FRAME 3

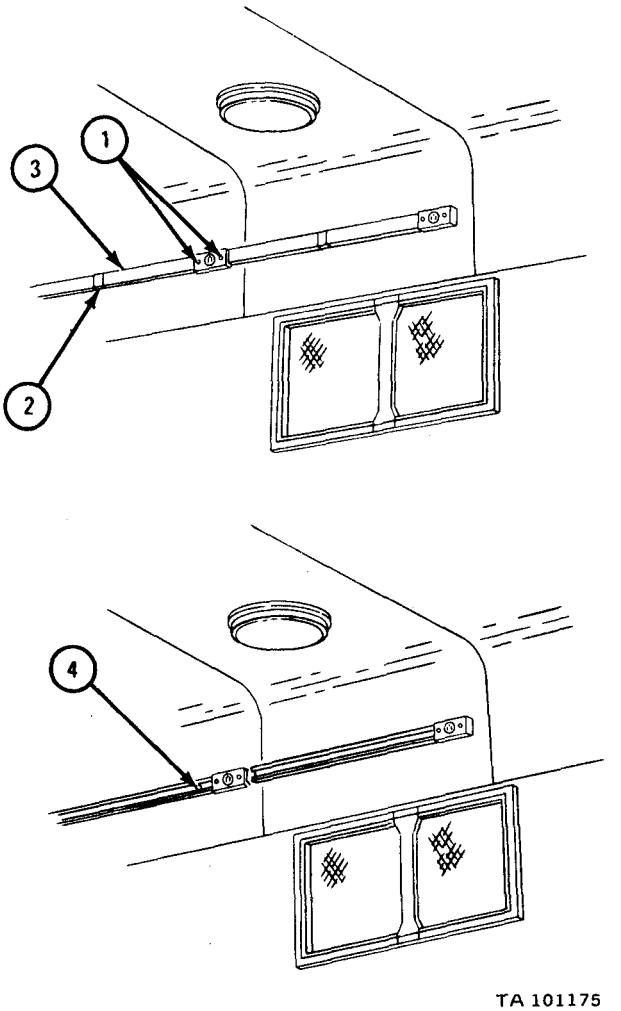

FRAME 3

Soldier A 1. Hold right rear ceiling panel (1) up.

Soldier B 2. Take out 16 screws (2).

Soldiers A and B 3. Take out right rear ceiling panel (1).

GO TO FRAME 4

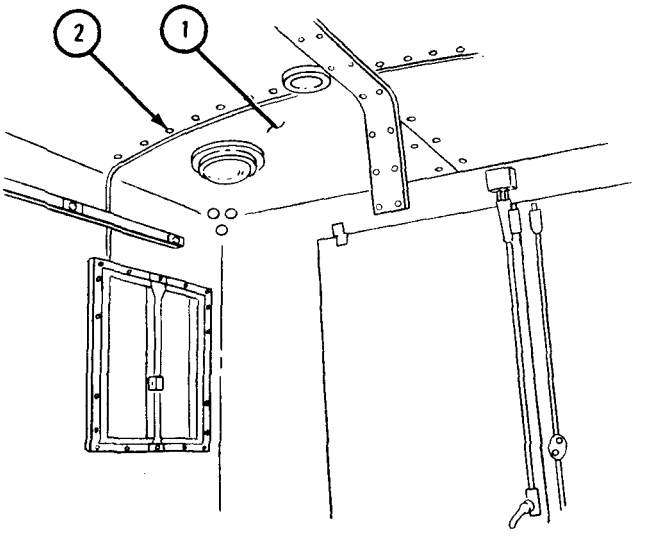

TA 101176

FRAME 4

1. Take out 12 screws (1).
2. Take out two screws (2) and nuts (3). Take off door stop (4).
3. Pull back three panels (5).

GO TO FRAME 5

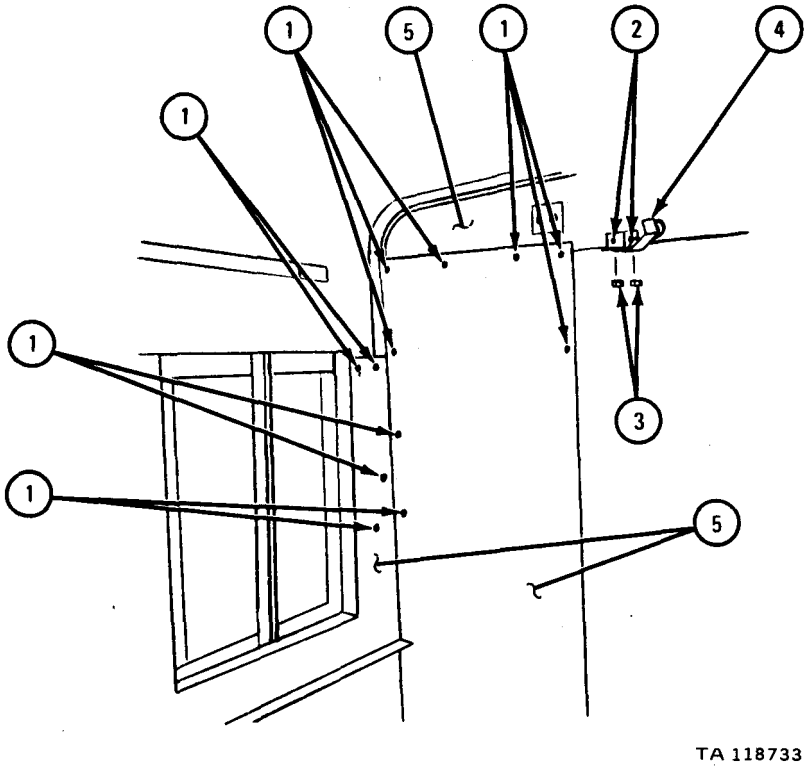

FRAME 5

Soldier A 1. Hold three nuts (1).

Soldier B 2. Take out three screws and lockwashers (2).

3. Take off lifting shackle (3).

END OF TASK

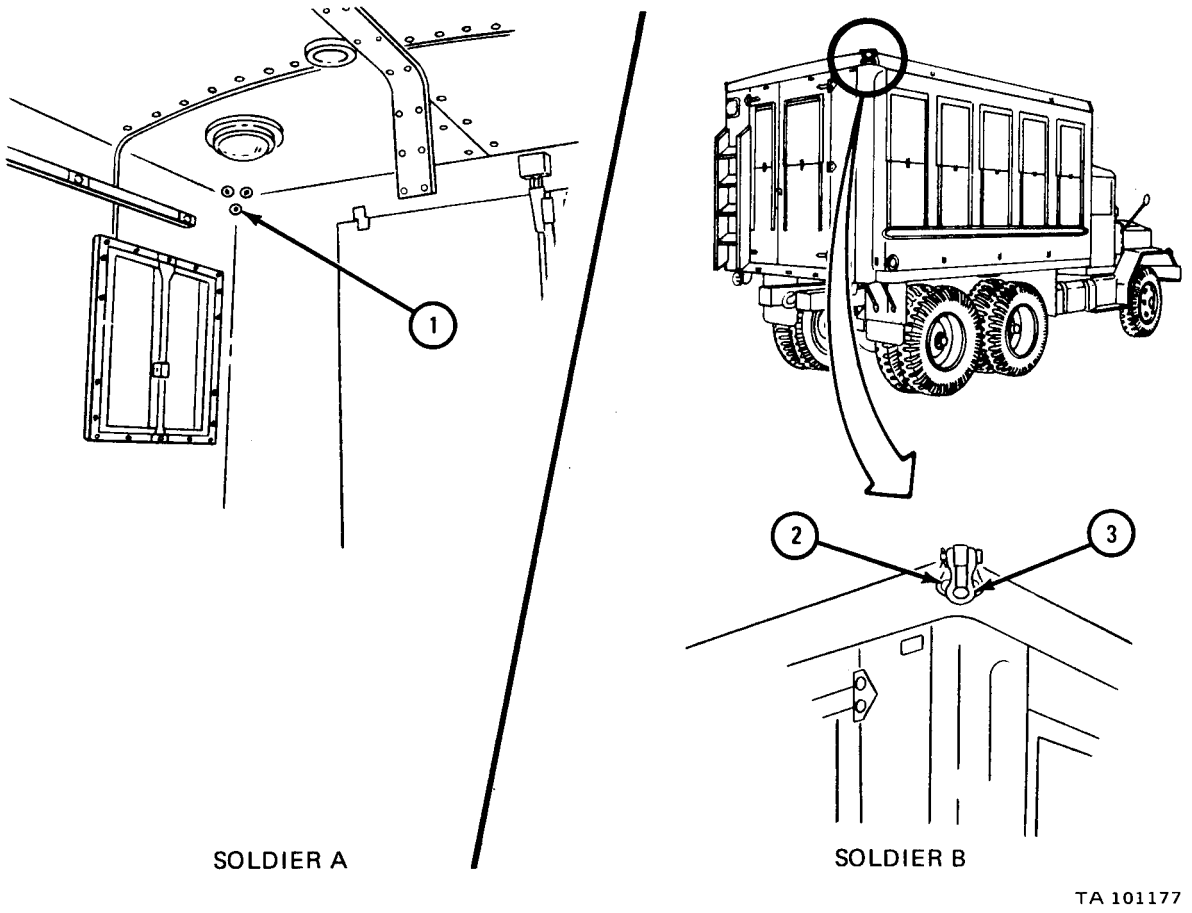

(2) Disassembly. Refer to para 17-41b (2).

(3) Cleaning, inspection, and repair. Refer to para 17-41b (3).

(4) Assembly. Refer topara 17-41b (4).

(5) Replacement.

FRAME 1

Soldier A 1. Put lifting shackle (1) in place with three screws and lockwashers (2).

Soldier B 2. Put on and hold three nuts (3). Hold nuts.

Soldier A 3. Tighten three screws (2).

GO TO FRAME 2

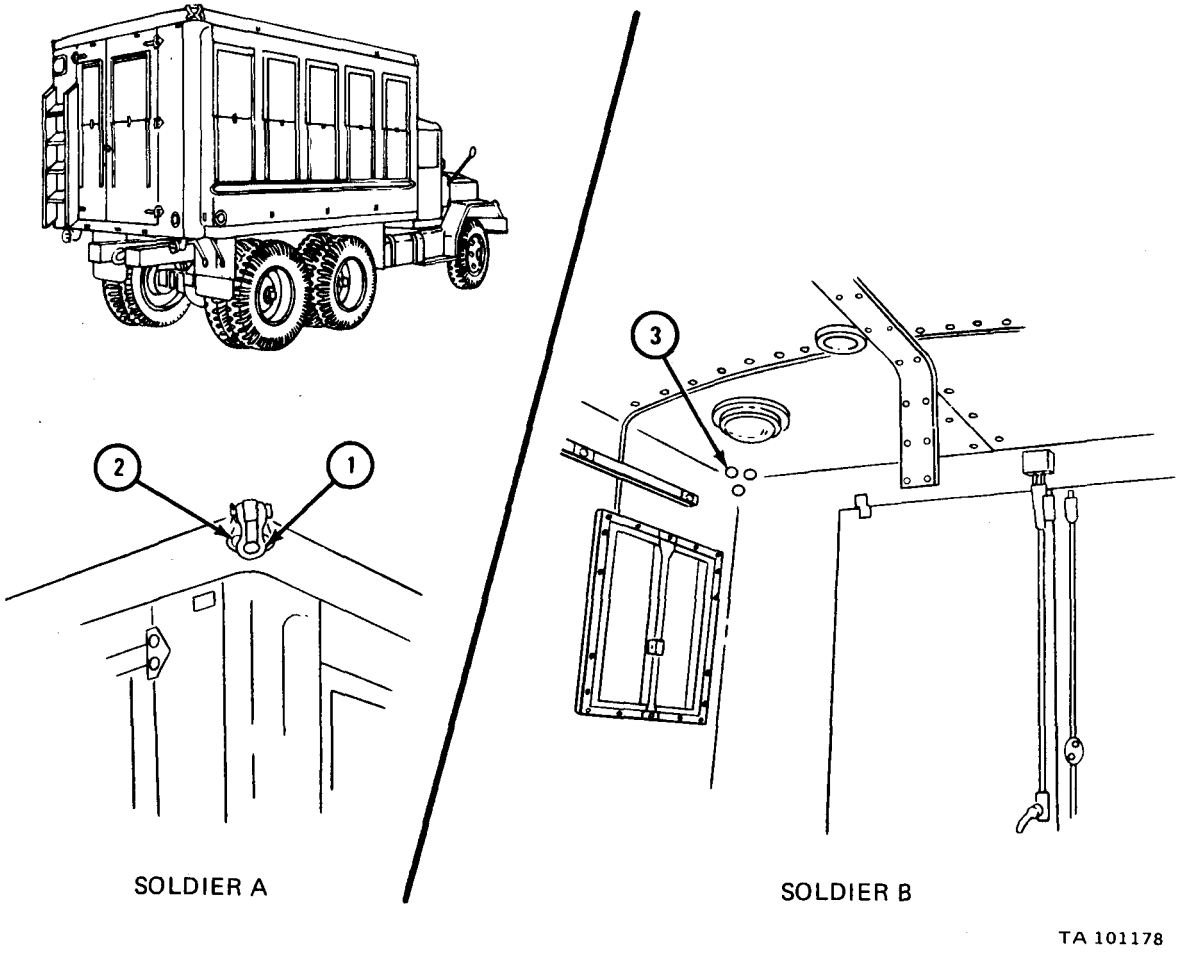

FRAME 2

1. Put three panels (1) in place.
2. Put in 12 screws (2).
3. Put door stop (3) in place. Put in two screws (4) and nuts (5).

GO TO FRAME 3

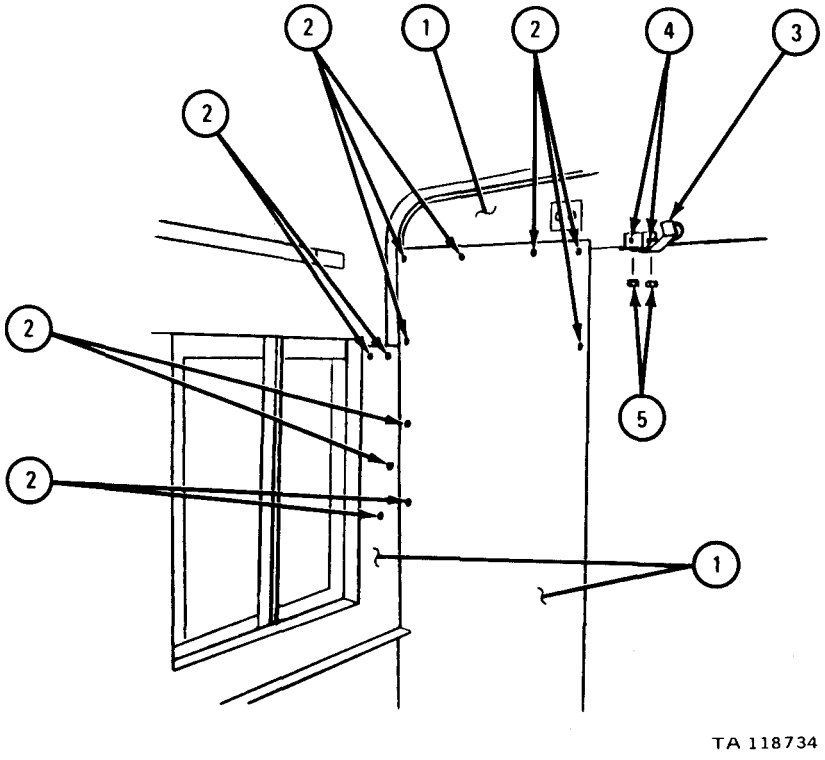

FRAME 3

Soldiers A and B	1.	Put up right rear ceiling panel (1).
Soldier B	2.	Hold right rear ceiling panel (1) up.
Soldier A	3.	Put in 16 screws (2).

GO TO FRAME 4

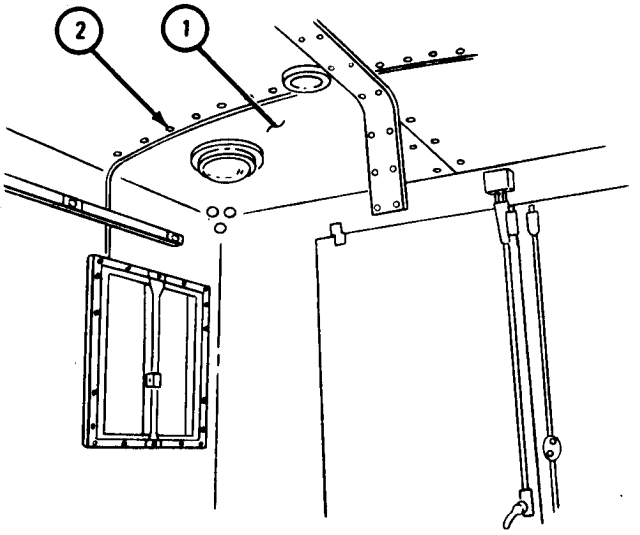

TA 101176

FRAME 4

1. Put in two screws (1).
2. Put on two terminal strip cover plates (2).
3. Put on two clips (3).
4. Put in four screws (4).

GO TO FRAME 5

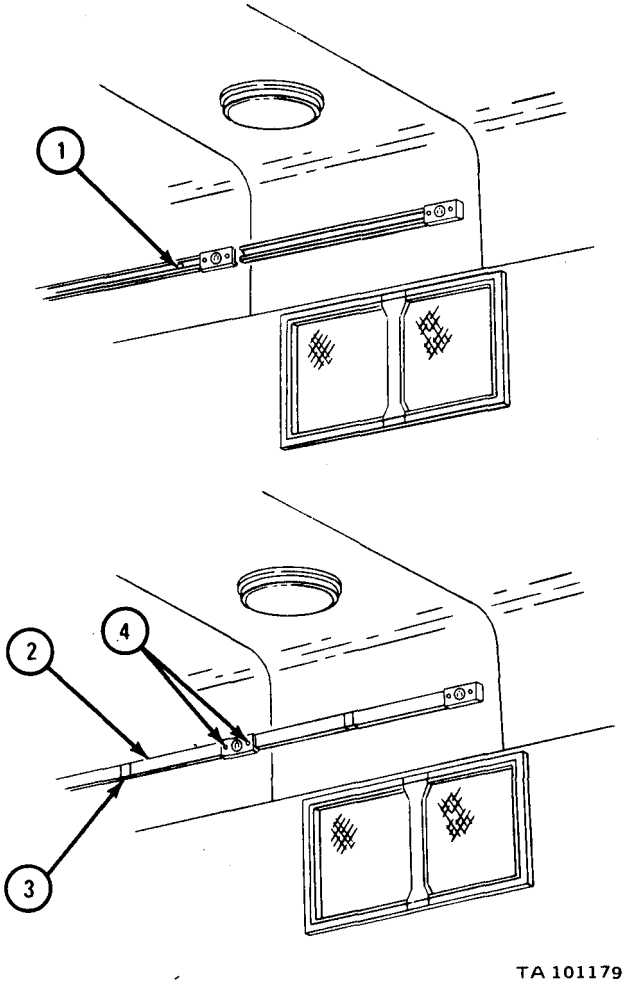

FRAME 5

Soldier A	1.	Hold center ceiling panel (1) up.
Soldier B	2.	Put in 20 screws (2).
Soldier A	3.	Put inner window frame (3) in place and hold it.
Soldier B	4.	Put in 18 screws (4) around inner window frame (3).
	5.	Put on clip (5).

NOTE

Follow-on Maintenance Action Required:

1. Replace dome light and fixture. Refer to TM 9-2320-209-20.
2. Reconnect battery ground cable. Refer to TM 9-2320-209-20.
3. Replace external power cable. Refer to Operation of Shop Van and Instrument Repair Shop Van Trucks, TM 9-2320-209-10.

END OF TASK

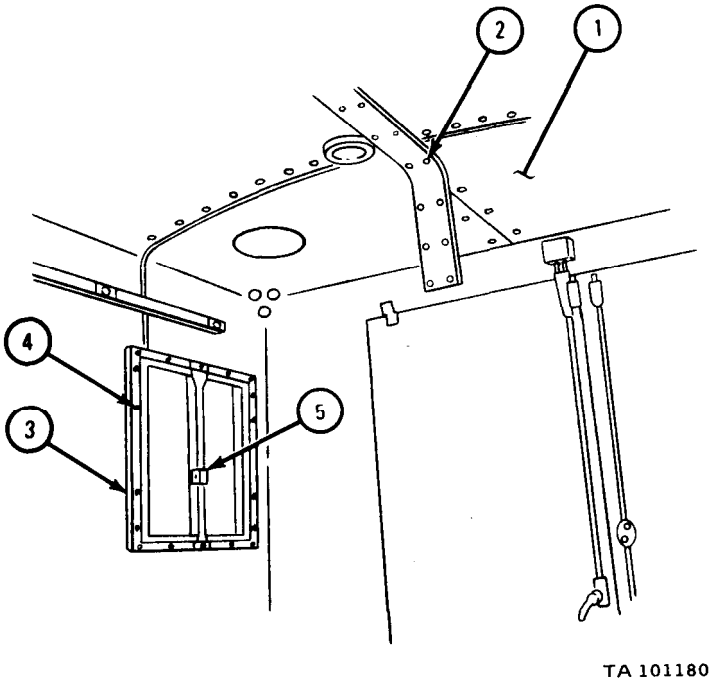

e. Left Rear Lifting Shackle.

(1) Removal.

FRAME 1

Soldier A 1. Take out 18 screws (1) around inner window frame (2).

2. Take off clip (3) and take off inner window frame (2).

Soldier B 3. Hold center ceiling panel (4) up.

Soldier A 4. Take out 20 screws (5).

Soldier B 5. Let center ceiling panel (4) down.

GO TO FRAME 2

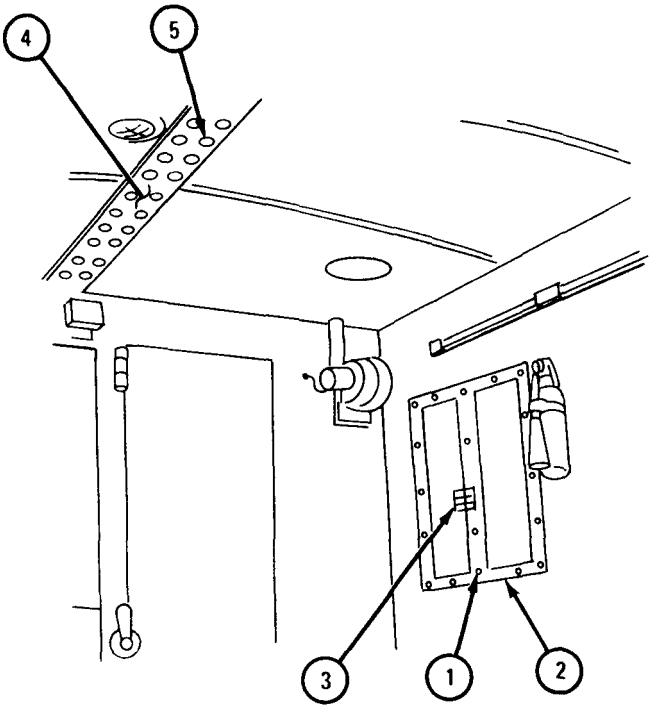

TA 101181

FRAME 2

1. Take out two screws (1).
2. Take out two nuts (2) and take off blower bracket (3).
3. Take out eight screws (4).
4. Take off blower assembly (5).

GO TO FRAME 3

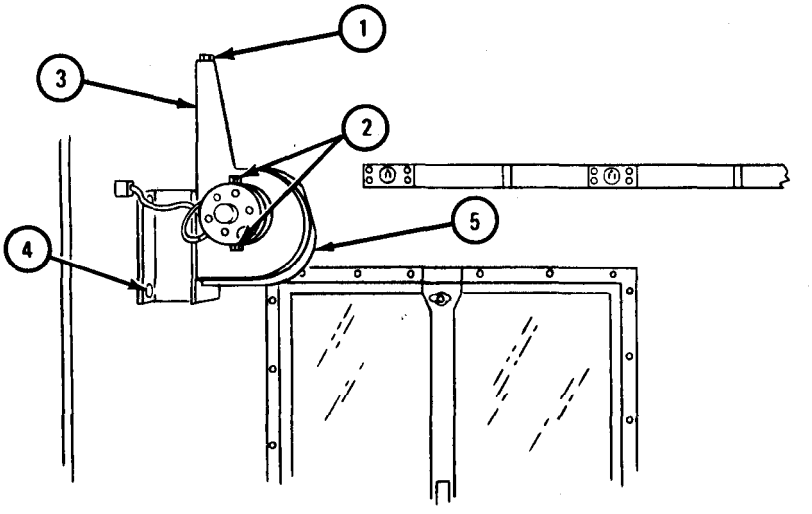

TA 101182

FRAME 3

1. Take out four screws (1).
2. Take out two clips (2) and take off two terminal bar covers (3).
3. Take out two screws (4).

GO TO FRAME 4

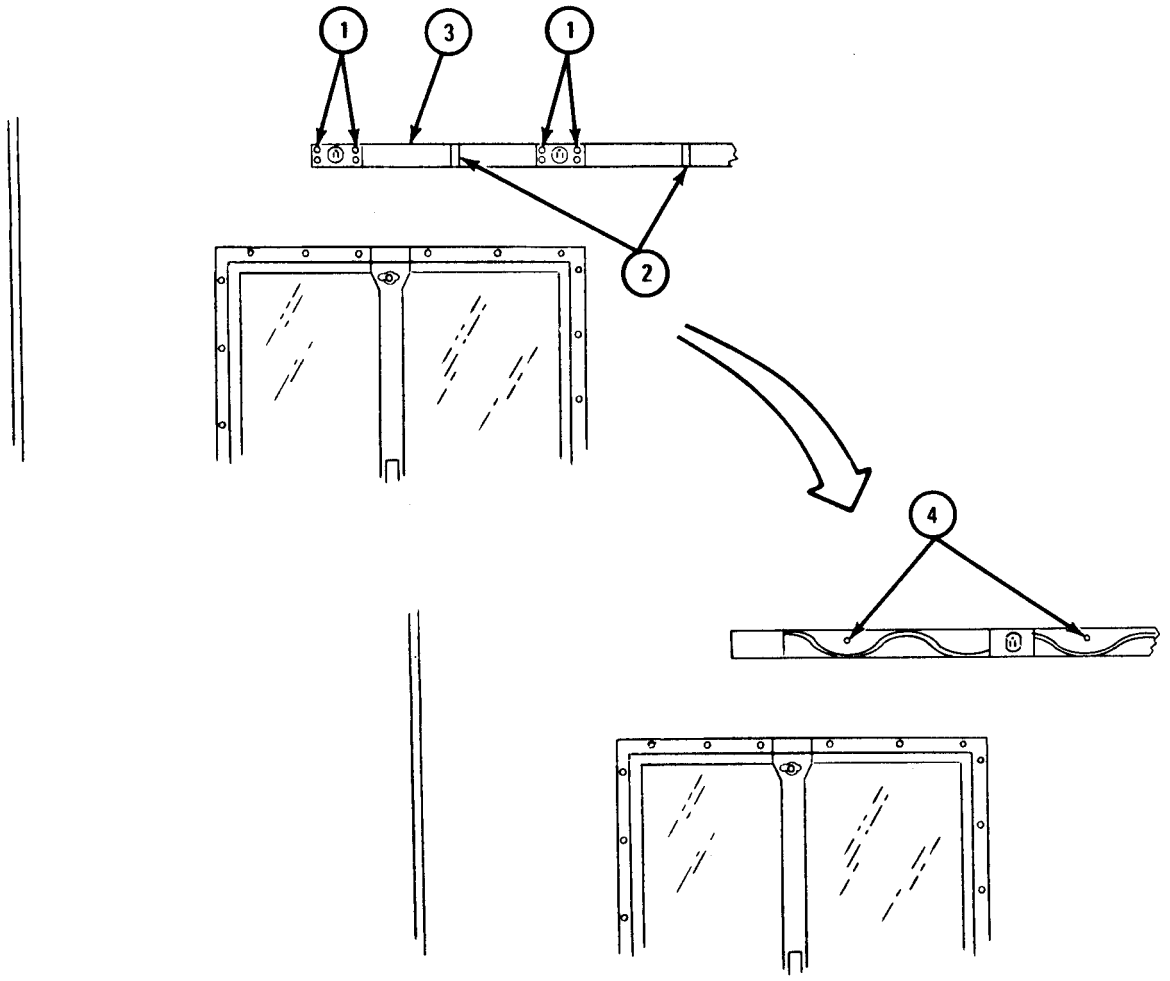

FRAME 4

1. Take out 14 screws (1).
2. Take out two screws (2) and nuts (3). Take off door stop (4).
3. Pull back three panels (5).

GO TO FRAME 5

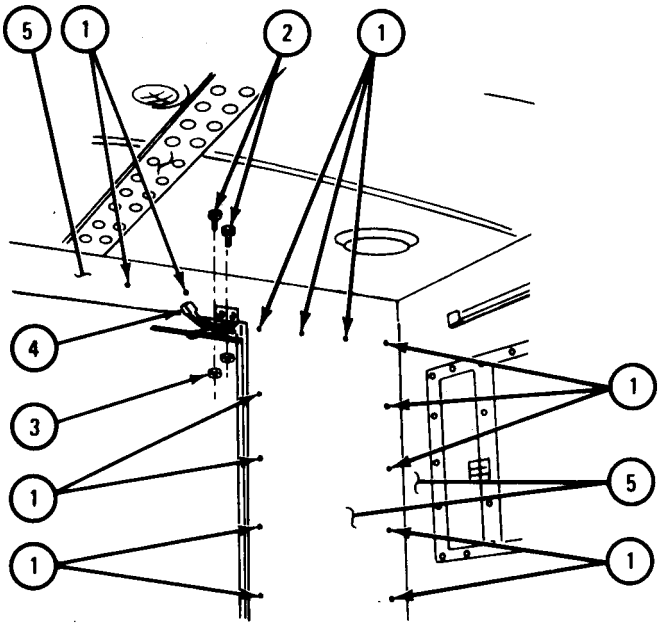

FRAME 5

Soldier A 1. Hold left rear ceiling panel (1) up.

Soldier B 2. Take out 15 screws (2).

Soldiers A and B 3. Take out left rear ceiling panel (1).

GO TO FRAME 6

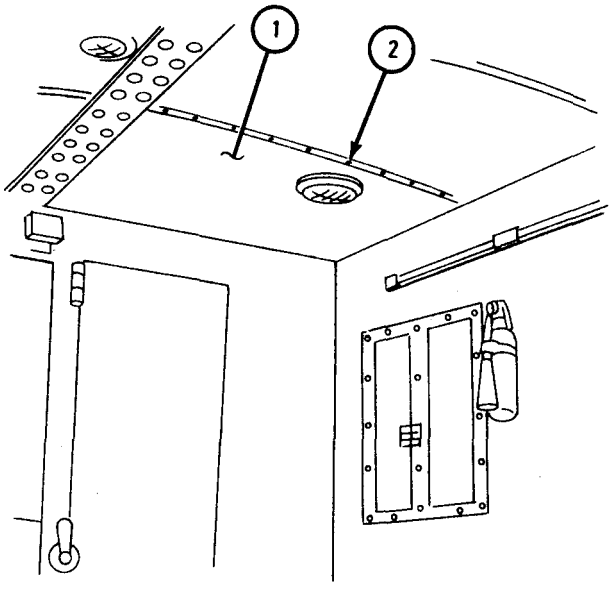

TA 101184

FRAME 6

Soldier A 1. Hold three nuts (1).

Soldier B 2. Take out three screws and lockwashers (2) and take off lifting shackle (3).

END OF TASK

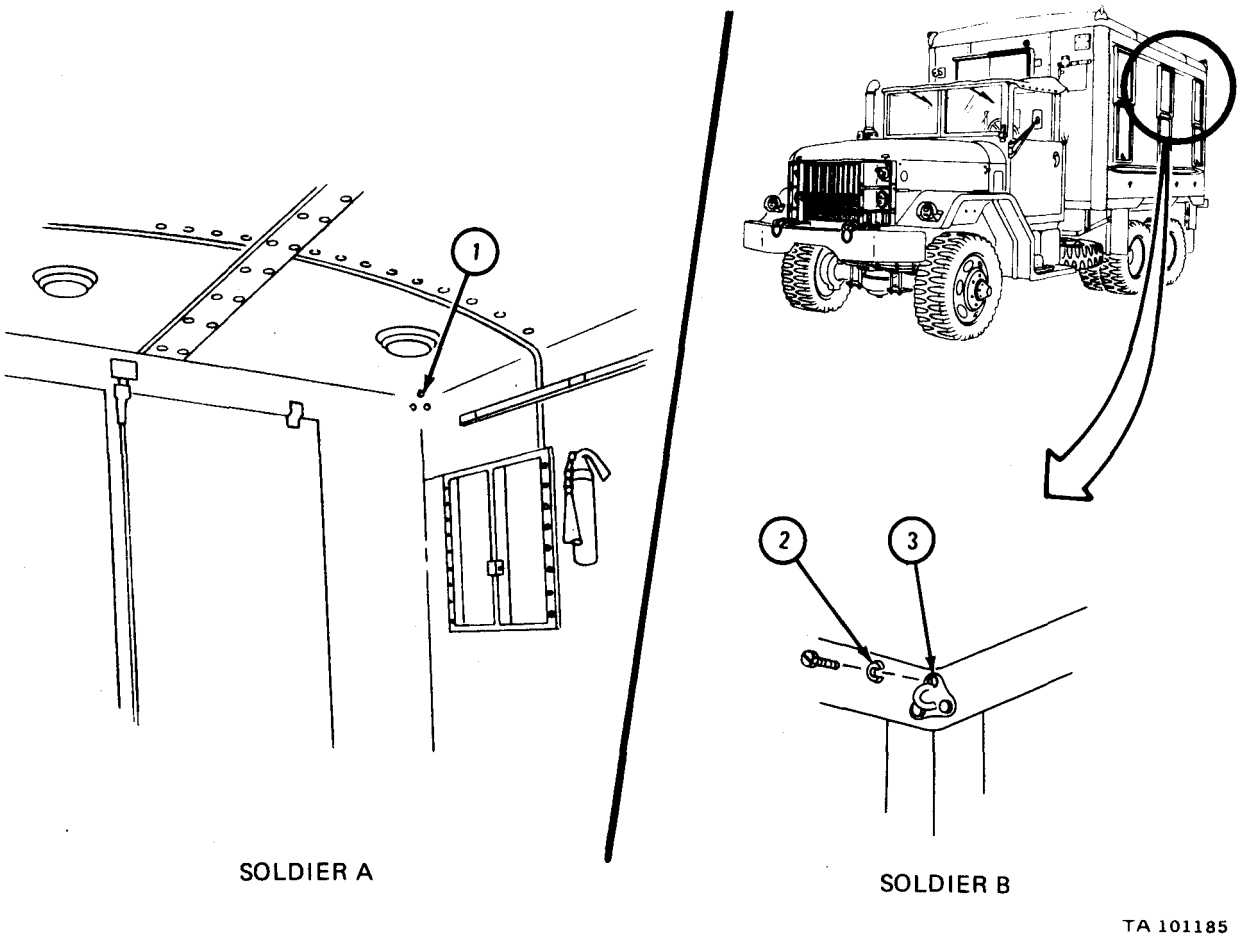

(2) Disassembly. Refer to para 17-41b (2).

(3) Cleaning, inspection, and repair. Refer to para 17-41b (3).

(4) Assembly. Refer to para 17-41b (4).

(5) Replacement.

FRAME 1

Soldier A 1. Put lifting shackle (1) in place with three screws and lockwashers (2).

Soldier B 2. Put on and hold three nuts (3).

Soldier A 3. Tighten three screws (2).

GO TO FRAME 2

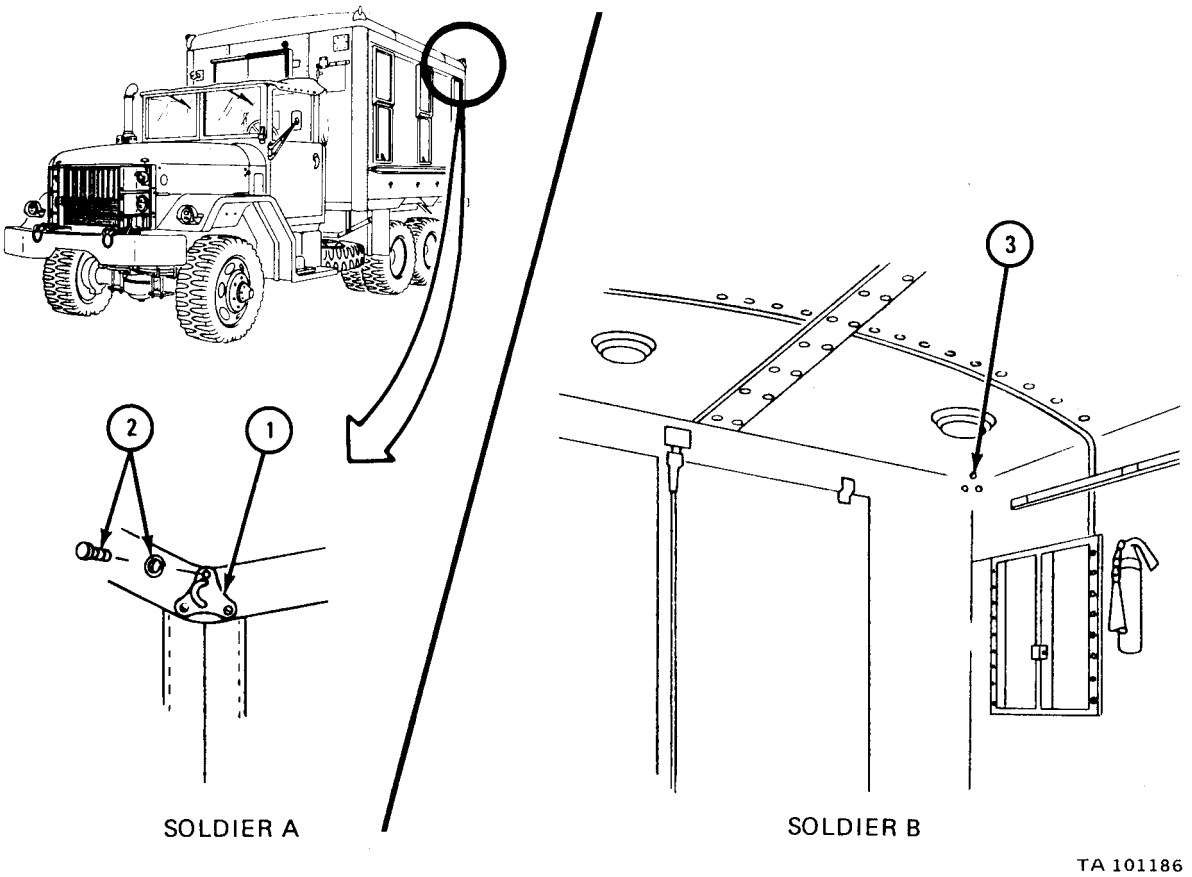

FRAME 2

1. Put three panels (1) in place. Put in 14 screws (2).
2. Put door stop (3) in place. Put in two screws (4) and nuts (5).

GO TO FRAME 3

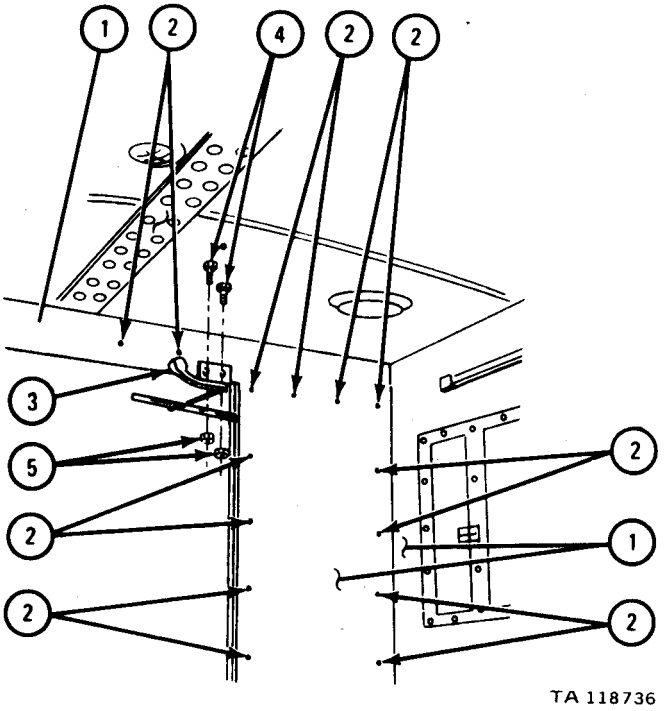

FRAME 3

Soldiers A and B 1. Put up left rear ceiling panel (1).

Soldier B 2. Hold left rear ceiling panel (1) up.

Soldier A 3. Put in 15 screws (2).

GO TO FRAME 4

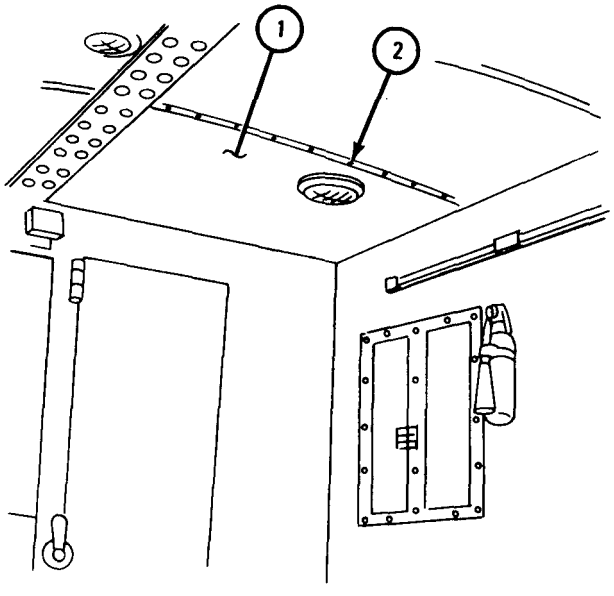

TA 101184

FRAME 4

1. Put in two screws (1).
2. Put on two terminal bar covers (2) and clips (3).
3. Put in four screws (4).

GO TO FRAME 5

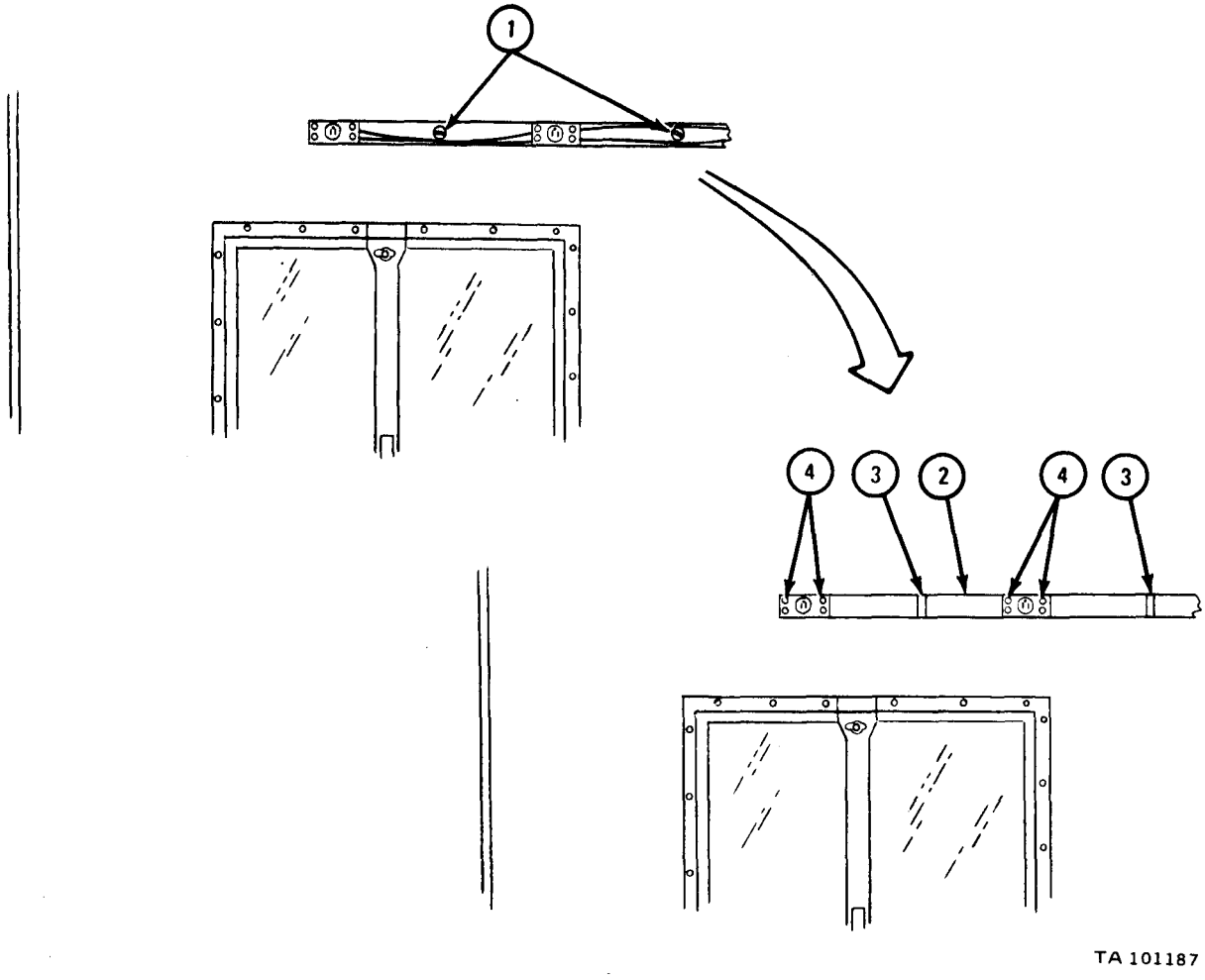

FRAME 5

Soldier A 1. Put blower assembly (1) in place. Put in eight screws (2).

2. Put blower bracket (3) in place and hold it.

Soldier B 3. Put on two nuts (4).

4. Put in two screws (5).

GO TO FRAME 6

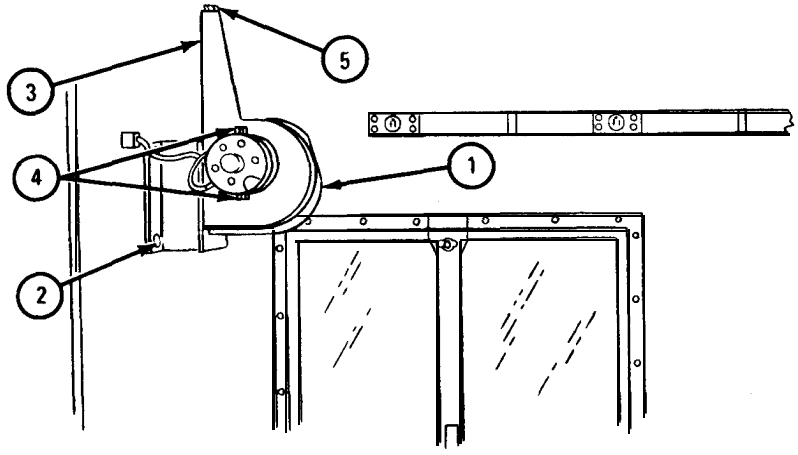

TA 101188

FRAME 6

Soldier A 1. Hold center ceiling panel (1) up.

Soldier B 2. Put in 20 screws (2).

Soldier A 3. Put inner window frame (3) in place and hold it.

Soldier B 4. Put in 18 screws (4).

5. Put on clip (5).

NOTE

Follow-on Maintenance Action Required:

1. Replace dome light and fixture. Refer to TM 9-2320-209-20.
2. Reconnect battery ground cable. Refer to TM 9-2320-209-20.
3. Replace external power cable. Refer to Operation of Shop Van and Instrument Repair Shop Van Trucks, TM 9-2320-209-10.

END OF TASK

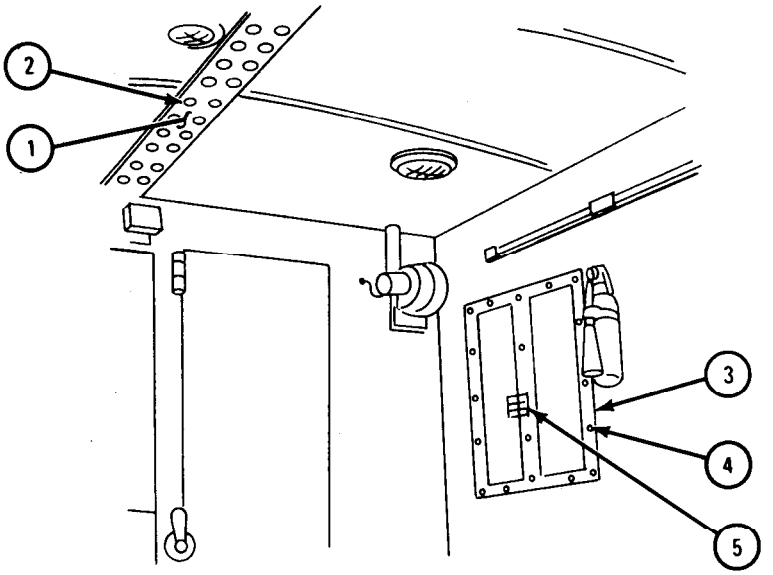

TA 101189

17-42. FOLDING STEP REMOVAL, REPAIR, AND REPLACEMENT.

TOOLS: No special tools required

SUPPLIES: None

PERSONNEL: Two

EQUIPMENT CONDITION: Truck parked, engine off, handbrake set.

a. Preliminary Procedure.

(1) Remove converter. Refer to para 17-37.

(2) Remove dome light switch. Refer to TM 9-2320-209-20.

(3) Remove circuit breaker box. Refer to para 17-36.

b. Removal.

FRAME 1

1. Take out two screws (1) and take off STOP and START switch cover (2).
2. Tag wires before taking them off so they will be put back in the right place.
3. Take off three wires (3).
4. Open power switch box door (4).
5. Pull three wires (3) through bushing and nipple in power switch box (5).

GO TO FRAME 2

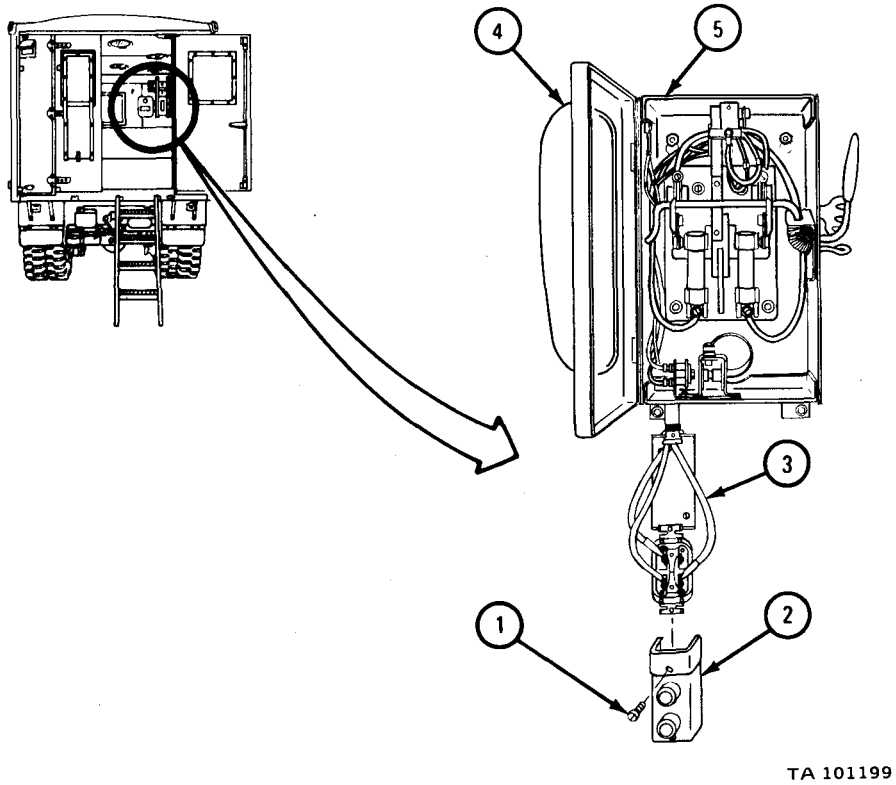

FRAME 2

1. Take out two screws (1).
2. Take out four screws (2) and feed wires (3) through two holes in rear of power switch box (4).
3. Take off two rails (5), power switch box (4), and STOP and START switch bracket (6).
4. Take out six converter mounting screws and washers (7).
5. Take out 16 panel screws (8).

GO TO FRAME 3

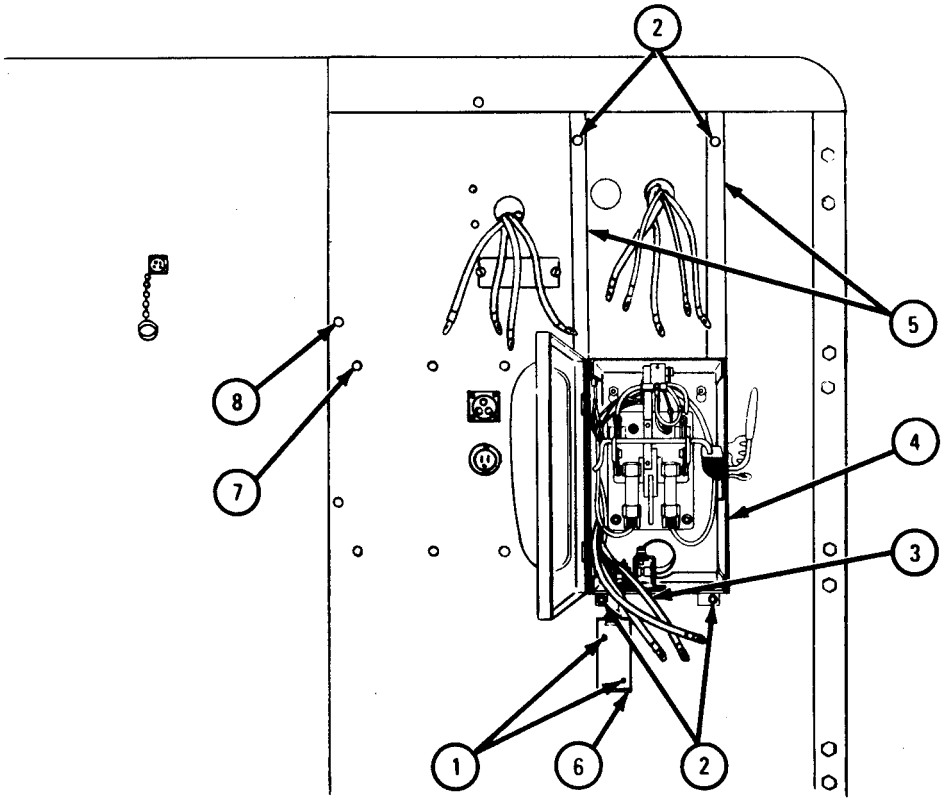

TA 101203

FRAME 3

1. Reach behind loose panel (1) and take off three converter plug wires (2).
2. Feed all wires (3) through panel (1).
3. Move panel (1) aside and pull back insulation (4) until eight nuts (5) are seen.

Soldier A 4. Working inside truck, hold eight nuts (5).

Soldier B 5. Working outside truck, take out eight screws and lockwashers (6). Take off four folding steps (7).

END OF TASK

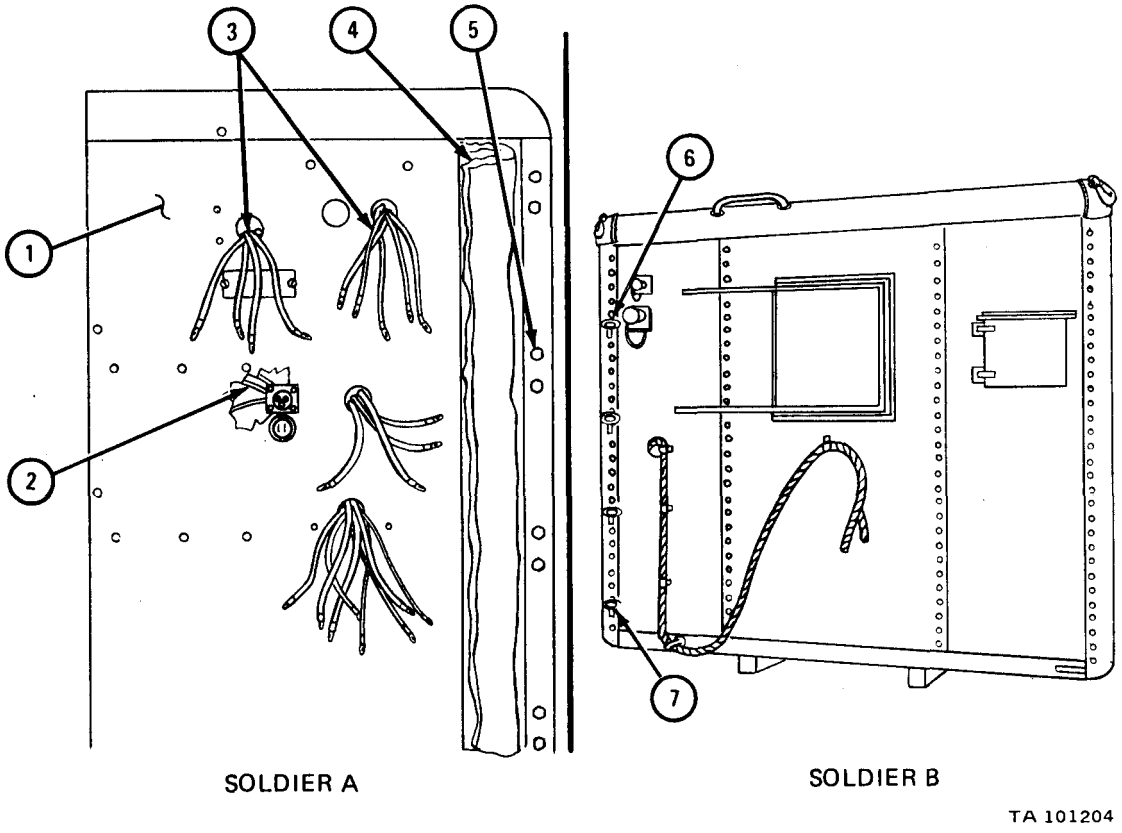

c. Cleaning. There are no special cleaning procedures needed. Refer to cleaning procedures given in Part 1, para 1-3.

d. Inspection and Repair.

FRAME 1

1. Check that folding step (1) is not bent, dented, torn or cracked. Straighten bent or dented parts. Refer to TM 10-450. Weld tears or cracks. Refer to FM 43-2.
2. If more repair is needed, get a new part.
3. Check that all threaded parts are not stripped or crossthreaded. Retap damaged threads.

END OF TASK

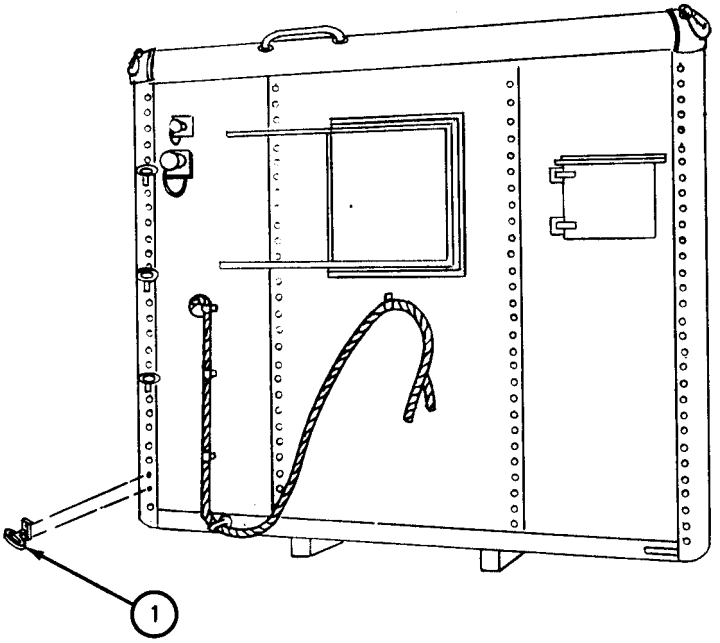

TA 101205

e. Replacement.

FRAME 1

Soldier A 1. Working outside truck, put on four folding steps (1). Put in eight screws and washers (2).

Soldier B 2. Working inside truck, put on eight nuts (3).

3. Put insulation (4) in place.

4. Feed all wires (5) through panel (6).

5. Put in three converter plug wires (7).

6. Put panel (6) in place.

GO TO FRAME 2

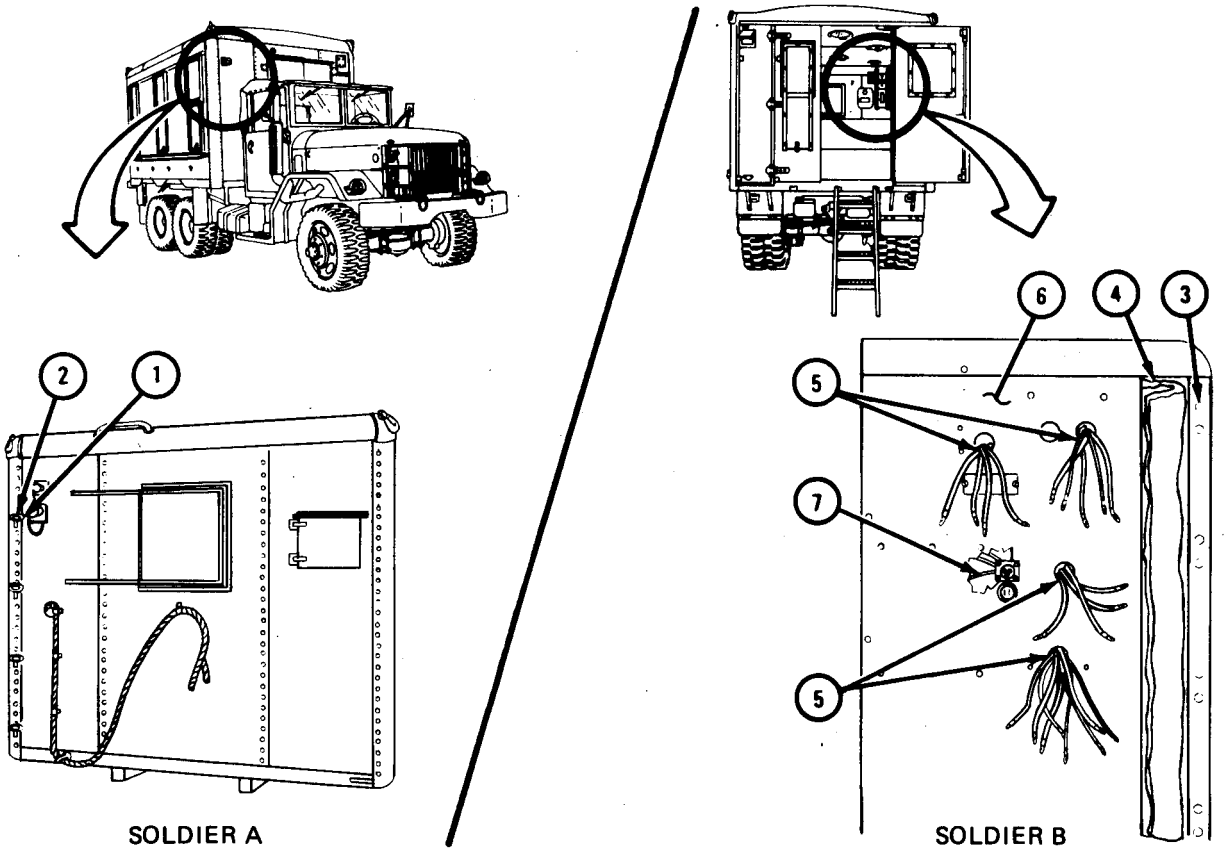

FRAME 2

1. Put in 16 panel screws (1).
2. Put in six converter mounting screws and washers (2).
3. Put STOP and START switch bracket (3), power switch box (4), and two rails (5) in place on panel (6).
4. Feed wires (7) through two holes in rear of power switch box (4).
5. Put in four screws (8).
6. Put in two screws (9).

GO TO FRAME 3

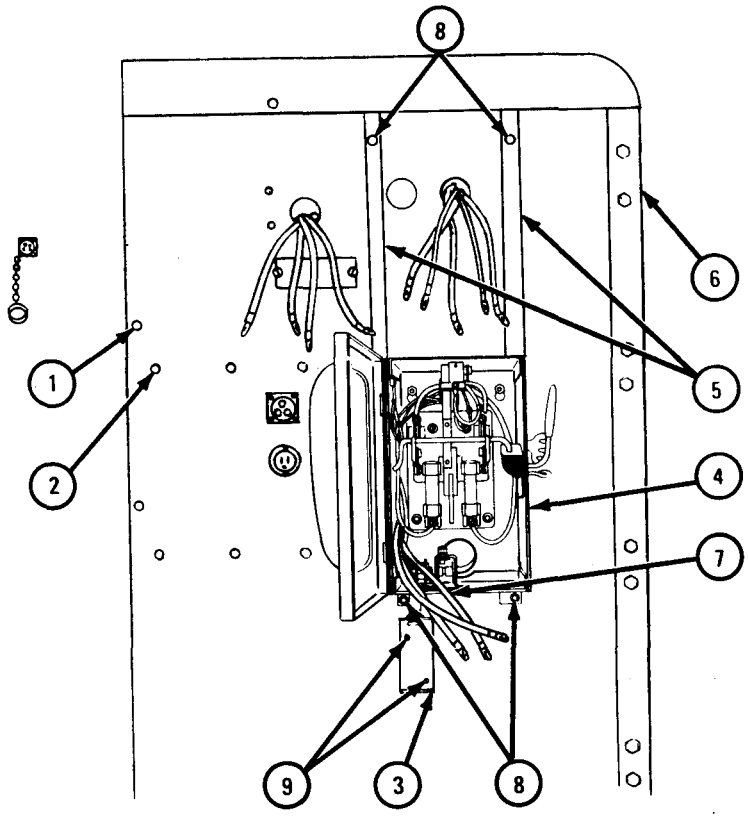

TA 089034

FRAME 3

1. Put on all wires (1) in power switch box (2) as tagged.
2. Take off tags. Pull three wires (3) through nipple and bushing in power switch box (2) as tagged. Take off tags.
3. Connect three wires (3) to STOP and START switch (4) as tagged. Take off tags.
4. Close power switch door (5).
5. Put on STOP and START switch cover (6) and put in two screws (7).

NOTE

Follow-on Maintenance Action Required:

1. Replace circuit breaker box. Refer to para 17-36.
2. Replace dome light switch. Refer to TM 9-2320-209-20.
3. Replace converter. Refer to para 17-37.

END OF TASK

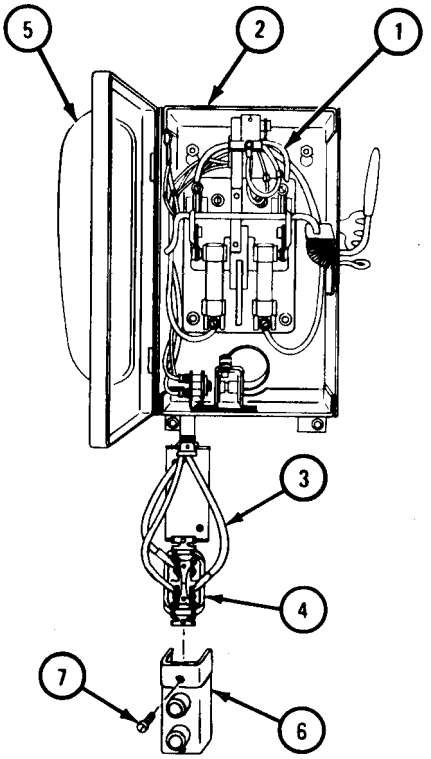

TA 089035

17-43. VAN BODY REMOVAL, REPAIR, AND REPLACEMENT.

TOOLS: No special tools required

SUPPLIES: Solvent, dry cleaning, type II (SD-2), Fed. Spec P-D-680
Pipe caps, fuel line
Metal container

PERSONNEL: Two

EQUIPMENT CONDITION: Truck parked, engine off, handbrake set.

a. Preliminary Procedures.

(1) Disconnect battery ground. Refer to TM 9-2320-209-20.

(2) Remove trailer electric coupling receptacle. Refer to TM 9-2320-209-20.

(3) Remove pioneer tool kit bracket. Refer to para 17-59.

(4) Remove front and rear splash shield and flap assemblies. Refer to para 17-69.

(5) Remove 24-volt wiring harness assembly. Refer to Part 1, para 7-12.

b. Removal.

FRAME 1

1. Put container under fuel pump (1).
2. Take off fuel line (2) from fuel pump (1). Cap fuel line and fuel pump openings.
3. Pull off power cable (3) from receptacle (4).
4. Take off 16 screws (5) and eight reflectors (6).

GO TO FRAME 2

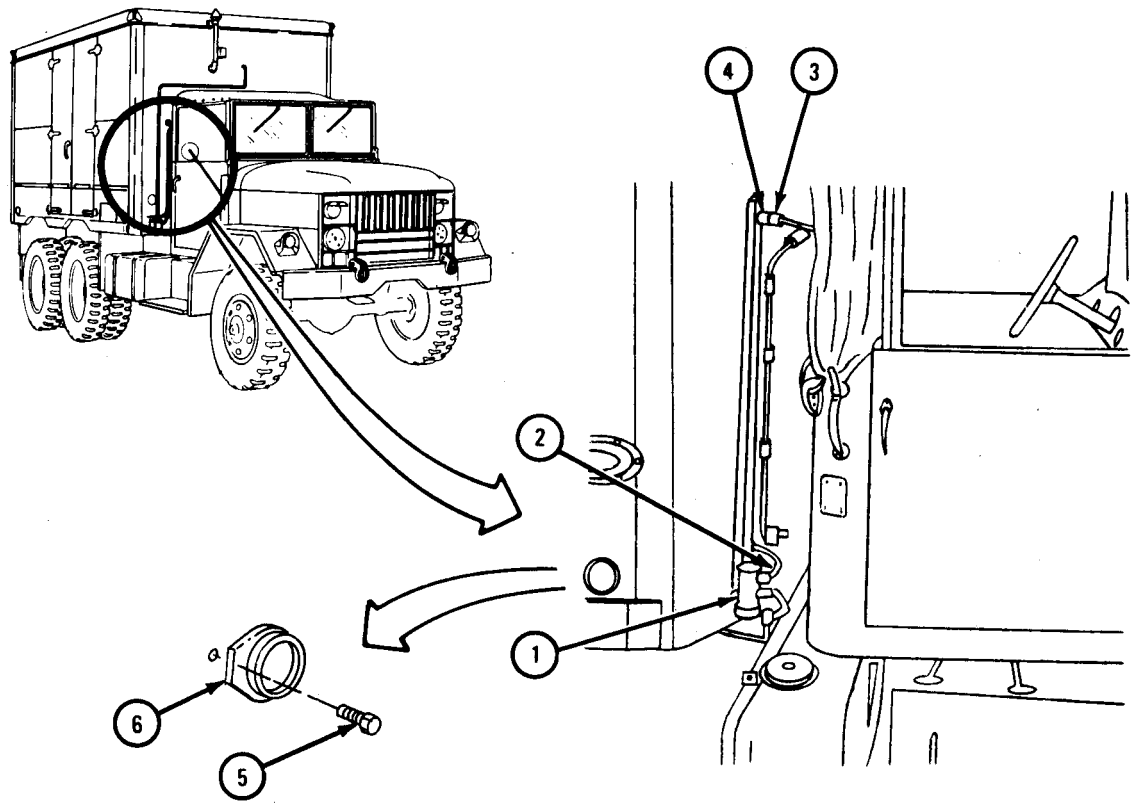

TA 104923

FRAME 2

1. Under side of van body at rear (1), hold nut (2) and take off screw (3) and nut (2).
2. Do step (1) on other side of truck.

GO TO FRAME 3

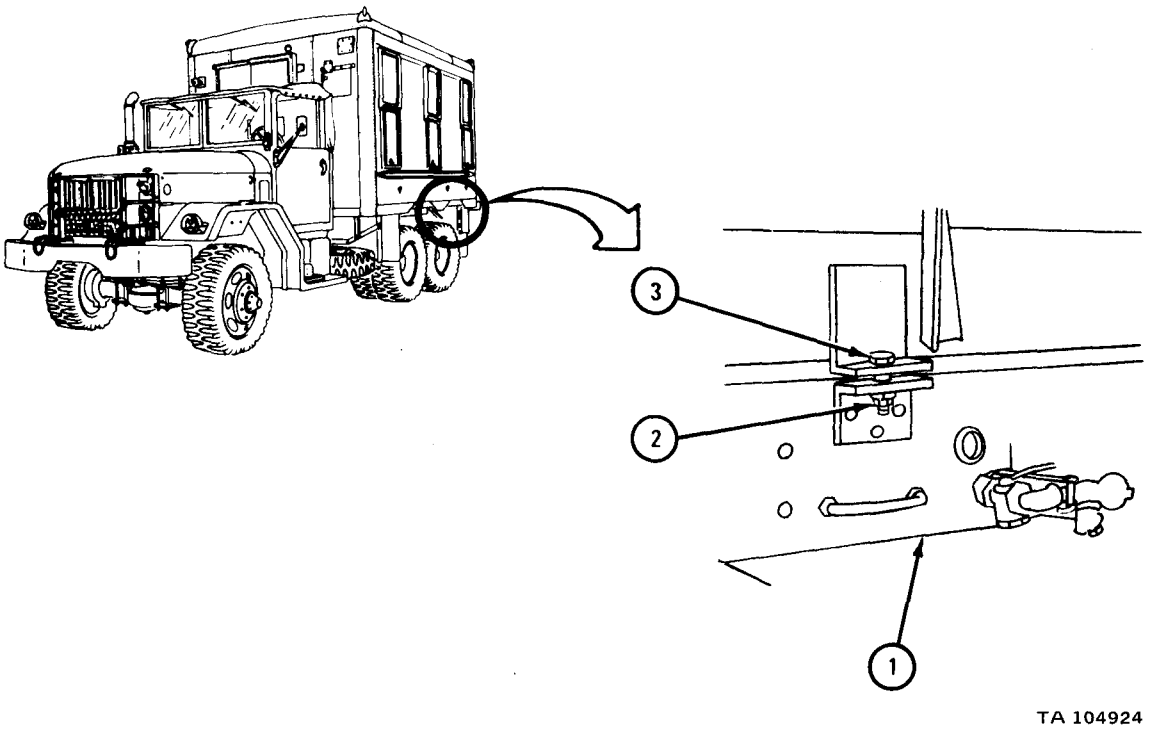

FRAME 3

1. Under side of van body at front (1), hold two nuts (2) and take off two screws (3), two inner and two outer springs (4), two washers (5), and two nuts (2).
2. Under side of van body over rear wheels (6), hold two nuts (7) and take off two screws (8), two springs (9), four spring keepers (10), and two nuts (7),
3. Do steps 1 and 2 on other side of truck.

GO TO FRAME 4

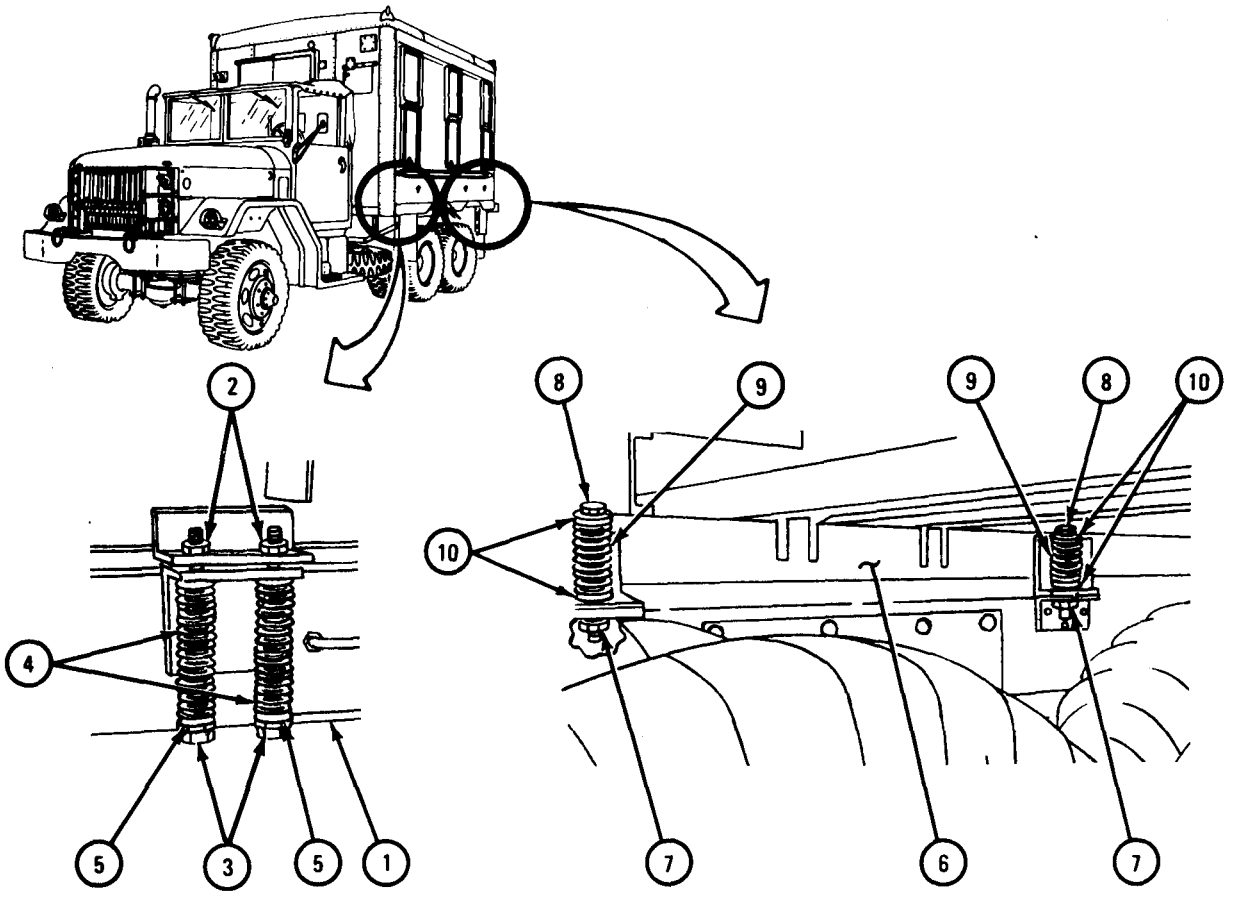

FRAME 4

WARNING

Be very careful at all times during this procedure. Check lifting shackles (1) for safety, and make sure lifting sling hooks are fully held in lifting shackles. Keep personnel clear of the underside of body (2) as it is being hoisted and lowered. Use enough support blocking to keep body level and safe.

1. Attach lifting sling to four lifting shackles (1).

Soldier A 2. Hoist body (2) slowly.

Soldier B 3. Check if body (2) is clear of chassis (3).

Soldier A 4. If clear, hoist body (2) up and put on blocks.

END OF TASK

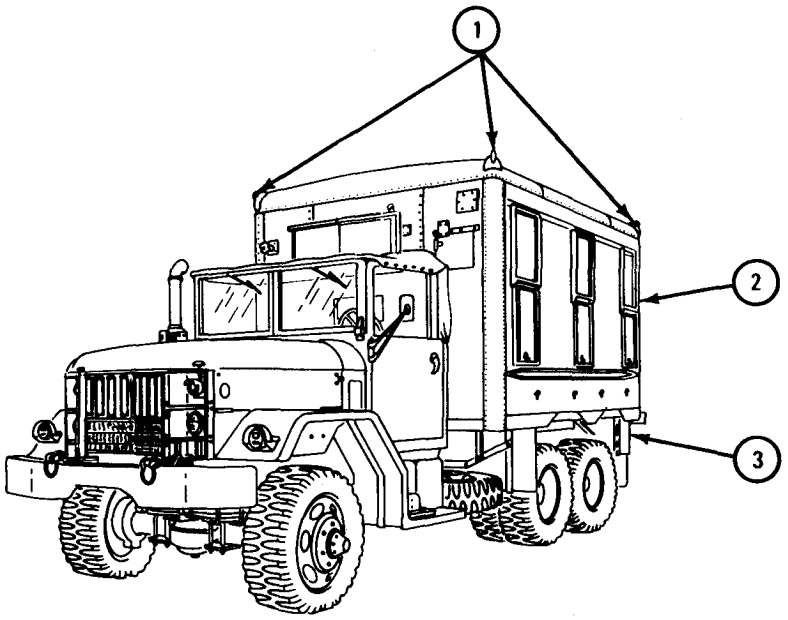

TA 104927

c. Disassembley.

(1) Remove side sash with panel and window assembly. Refer to para 17-40.

(2) Remove front sash with panel and window assembly. Refer to para 7-39.

(3) Remove communication door assembly. Refer to para 17-34.

(4) Remove circuit breaker assembly. Refer to para 17-36.

(5) Remove lifting shackle assembly. Refer to para 17-41.

(6) Remove folding step assembly. Refer to para 17-42.

(7) Remove 115-volt dome light assembly. Refer to para 17-35.

(8) Remove van door assemblies. Refer to TM 9-2320-209-20.

(9) Remove 24-volt and 115-volt rear door blackout switches. Refer to TM 9-2320-209-20.

(10) Remove 24-volt dome light assembly. Refer to TM 9-2320-209-20.

(11) Remove 24-volt dome light and blackout dome light toggle switches. Refer to TM 9-2320-209-20.

(12) Remove exhaust blower. Refer to TM 9-2320-209-20.

(13) Remove data plates. Refer to TM 9-2320-209-20.

(14) Remove rear door hinges. Refer to para 17-38.

(15) Remove 24-volt and 115-volt dome light lamps. Refer to TM 9-2320-209-20.

(16) Remove door seals. Refer to TM 9-2320-209-20.

(17) Remove van body personnel heater. Refer to TM 9-2320-209-20.

(18) Remove van body personnel heater ducts. Refer to TM 9-2320-209-20.

(19) Remove van body personnel heater switches. Refer to TM 9-2320-209-20.

(20) Remove power switch fuse. Refer to TM 9-2320-209-20.

d. Cleaning.

(1) Steam clean heavy dirt and grease.

WARNING

Dry cleaning solvent is flammable. Do not use near an open flame. Keep a fire extinguisher nearby when solvent is used. Use only in well-ventilated places. Failure to do this may result in injury to personnel and damage to equipment.

(2) Clean all parts with dry cleaning solvent. Dry well with clean lint-free rag.

e. Inspection and Repair.

(1) Check that all parts have no dents, cracks, or holes.

(2) Straighten all bent or dented parts.

(3) Repair cracks or holes by welding. Refer to TM 9-237.

f. Assembly.

(1) Replace power switch fuse. Refer to TM 9-2320-209-20.

(2) Replace van body personnel heater switches. Refer to TM 9-2320-209-20.

(3) Replace van body personnel heater ducts. Refer to TM 9-2320-209-20.

(4) Replace van body personnel heater. Refer to TM 9-2320-209-20.

(5) Replace door seals. Refer to TM 9-2320-209-20.

(6) Replace 24-volt and 115-volt dome light lamps. Refer to TM 9-2320-209-20.

(7) Replace rear door hinges. Refer to para 17-38.

(8) Replace data plates. Refer to TM 9-2320-209-20.

(9) Replace exhaust blower. Refer to TM 9-2320-209-20.

(10) Replace 24-volt dome light and blackout dome light toggle switches. Refer to TM 9-320-209-20.

(11) Replace 24-volt dome light assembly. Refer to TM 9-2320-209-20.

(12) Replace 24-volt and 115-volt rear door blackout switches. Refer to TM 9-2320-209-20.

(13) Replace van door assemblies. Refer to TM 9-2320-209-20.

(14) Replace 115-volt dome light assembly. Refer to para 17-35.

(15) Replace circuit breaker assembly. Refer to para 17-36.

(16) Replace folding step assembly. Refer to para 17-42.

(17) Replace lifting shackle assembly. Refer to para 17-41.

(18) Replace communication door assembly. Refer to para 17-34.

(19) Replace front sash with panel and window assembly. Refer to para 17-39.

(20) Replace side sash with panel and window assembly. Refer to para 17-40.

g. Replacement.

FRAME 1

WARNING

Be very careful at all times during this procedure. Check lifting shackles (1) for safety, and make sure lifting sling hooks are fully held in lifting shackles. Keep personnel clear of the underside of body as it is being hoisted and lowered. Use enough support blocking to keep body level and safe.

1. Attach lifting sling to four lifting shackles (1).

Soldier A 2. Hoist body (2) onto chassis (3).

Soldier B 3. Make sure body (2) is in correct position on chassis (3).

GO TO FRAME 2

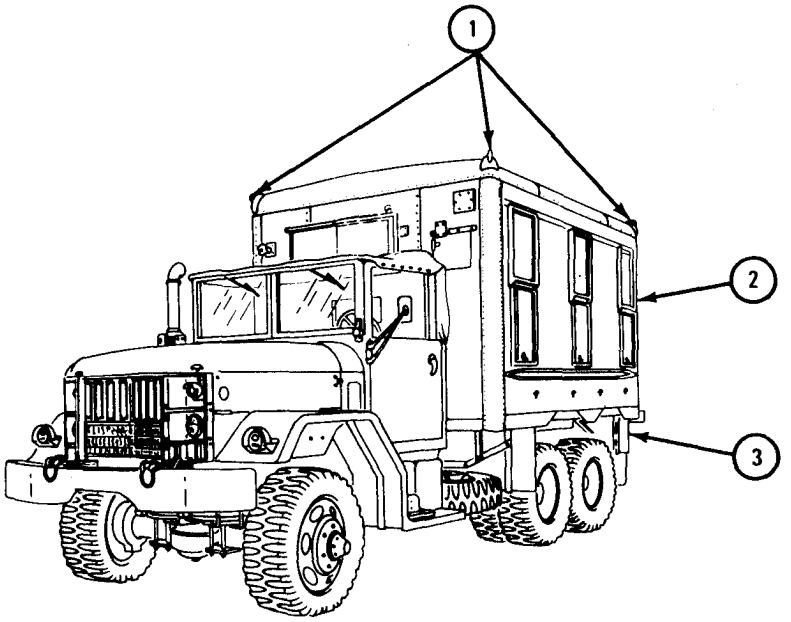

TA 104927

FRAME 2

1. Working under side of van body at front (1), put two screws (2) through washer (3), inner spring (4), and outer spring (5).
2. Put two screws (2) through bracket (6) and put on two nuts (7).
3. Do steps 1 and 2 again on other side of truck.

GO TO FRAME 3

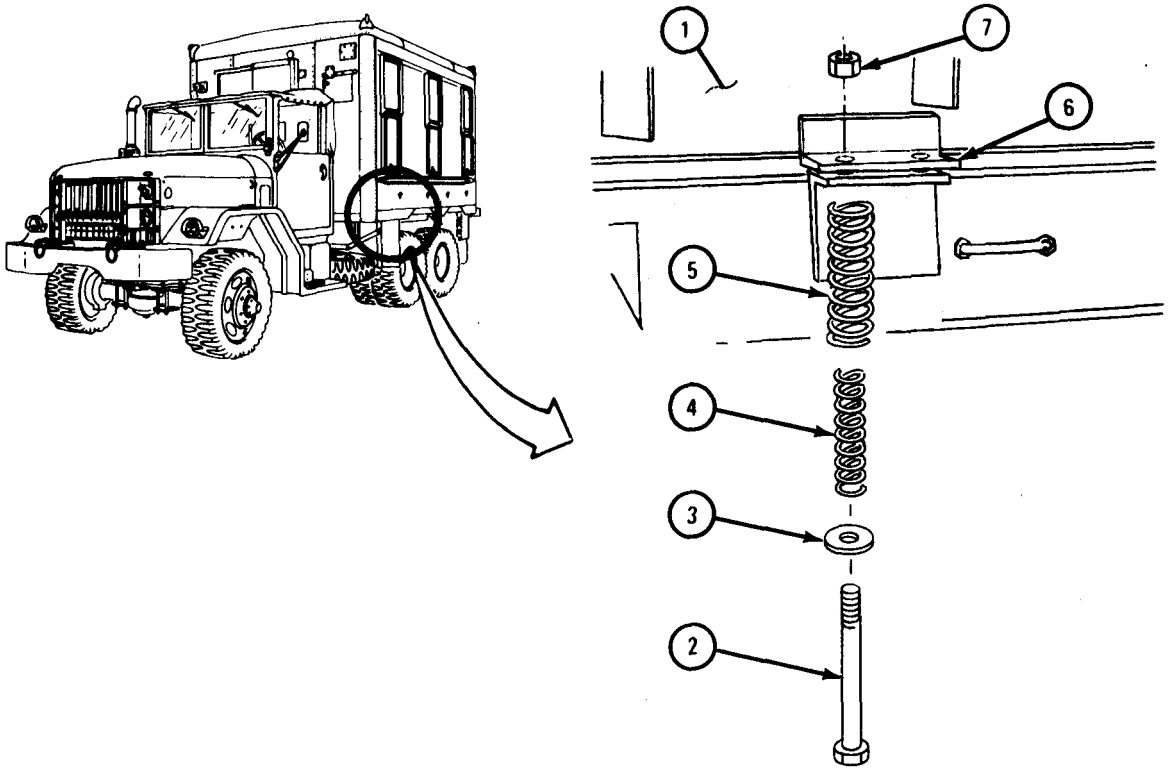

FRAME 3

1. Put spring keeper (1), spring (2), and spring keeper (3) on each of two screws (4).
2. Under side of van body over wheels (5), put two screws (4) through two brackets (6). Put on two nuts (7).
3. Hold two screws (4) and tighten two nuts (7).
4. Do steps 1, 2, and 3 on other side of truck.

GO TO FRAME 4

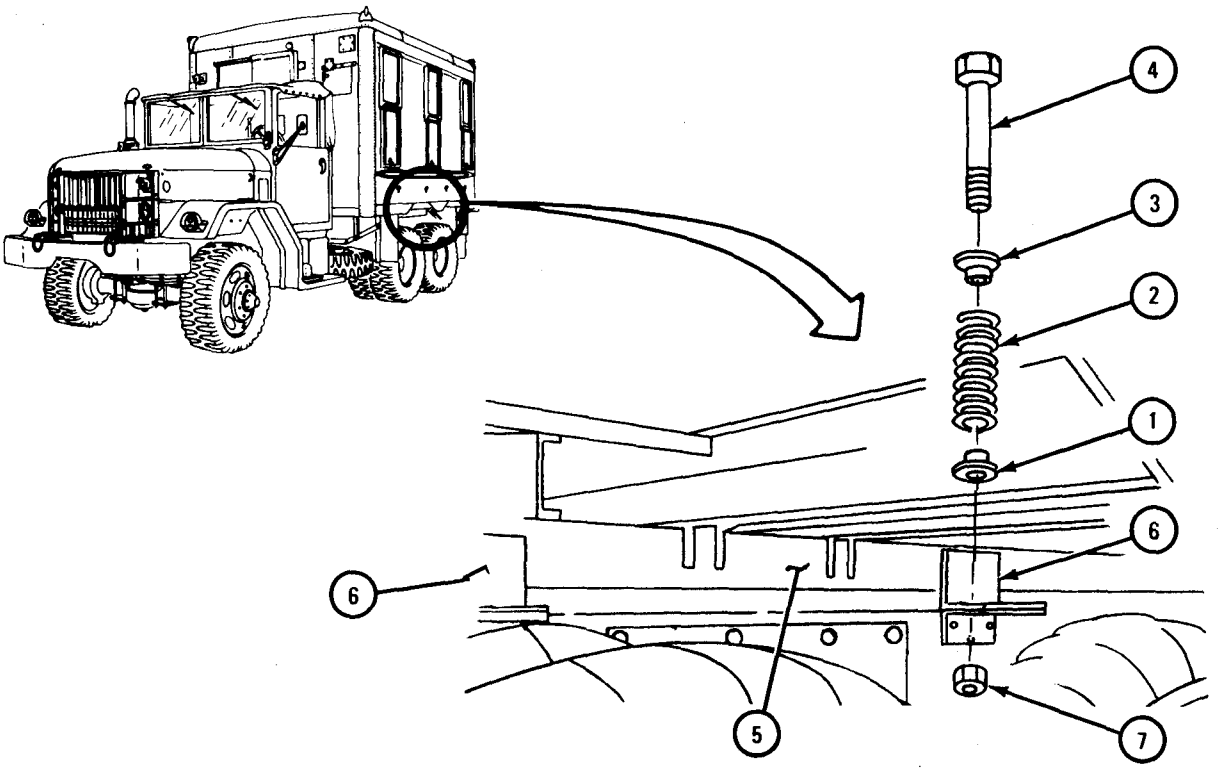

FRAME 4

1. Under side of van body at rear (1), put screw (2) through bracket (3). Put on nut (4).
2. Hold screw (2) and tighten nut (4).
3. Do steps 1 and 2 on other side of truck.

GO TO FRAME 5

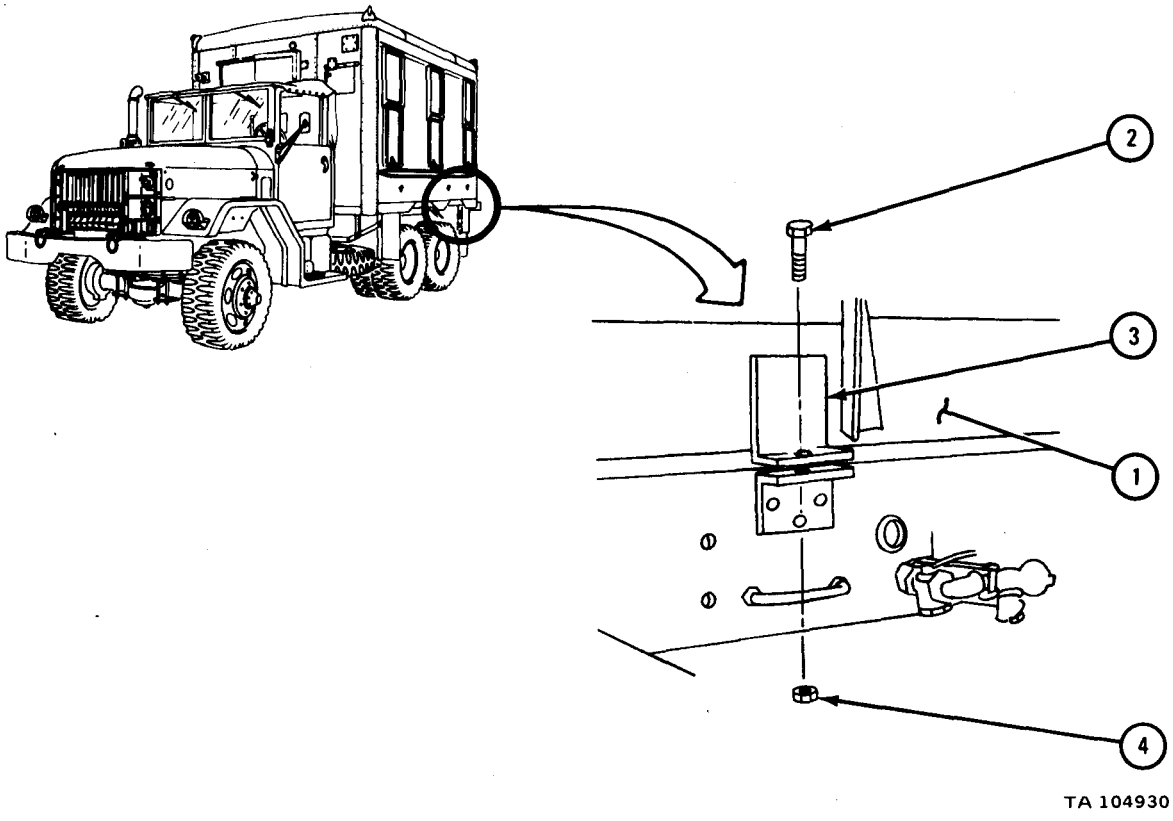

FRAME 5

1. Remove caps from fuel line (1) and fuel pump (2) openings.
2. Put fuel line (1) on fuel pump (2).
3. Put plug (3) into connector (4).
4. Put on eight reflectors (5) with 16 screws (6).

NOTE

Follow-on Maintenance Action Required:

1. Replace 24-volt wiring harness assembly. Refer to Part 1, para 7-12.
2. Replace front and rear splash shield and flap assemblies. Refer to para 17-69.
3. Replace pioneer tool kit bracket. Refer to para 17-59.
4. Replace trailer electric coupling receptacle. Refer to TM 9-2320-209-20.
5. Connect battery ground cable. Refer to TM 9-2320-209-20.

3 END OF TASK

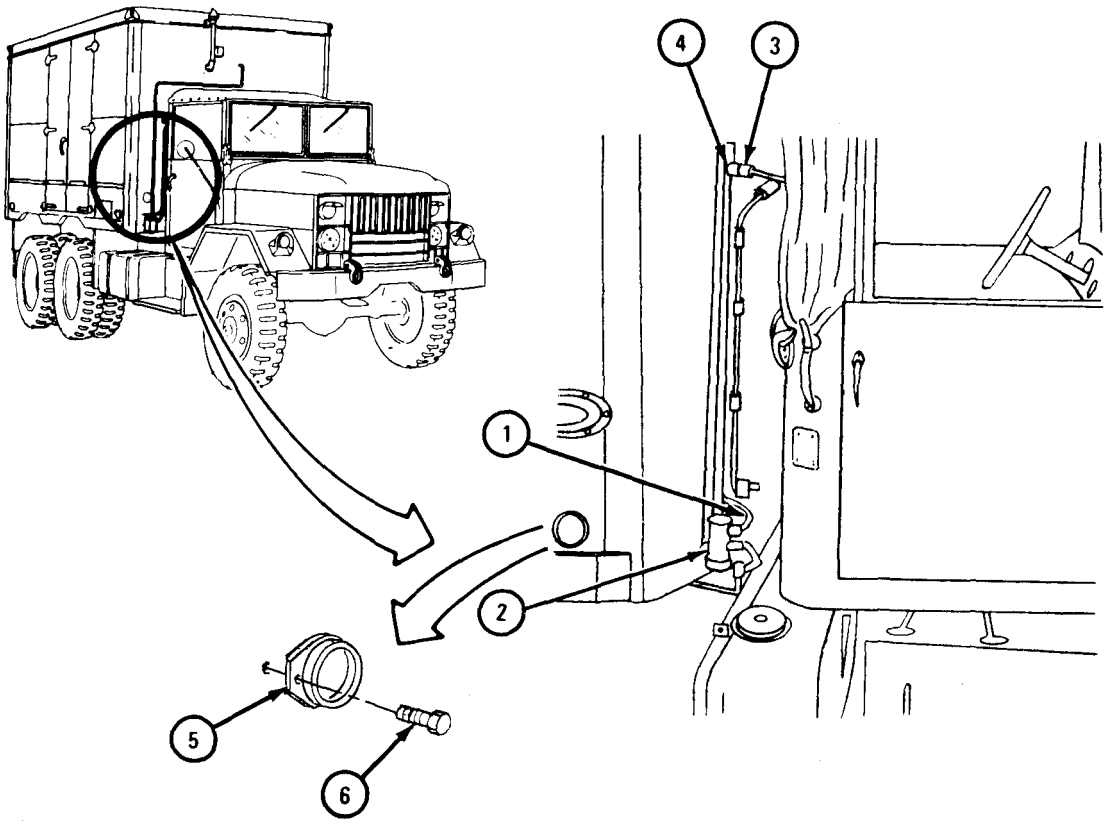

17-44. EARTH BORING MACHINE OPERATOR'S SEAT REMOVAL, REPAIR AND REPLACEMENT (TRUCK M764).

TOOLS: No special tools required

SUPPLIES: Cotter pin

PERSONNEL: One

EQUIPMENT CONDITION: Truck parked, engine off, handbrake set.

a. Removal.

FRAME 1

1. Take out pin (1).
2. Take out locking pin (2).
3. Take seat assembly (3) off truck.

END OF TASK

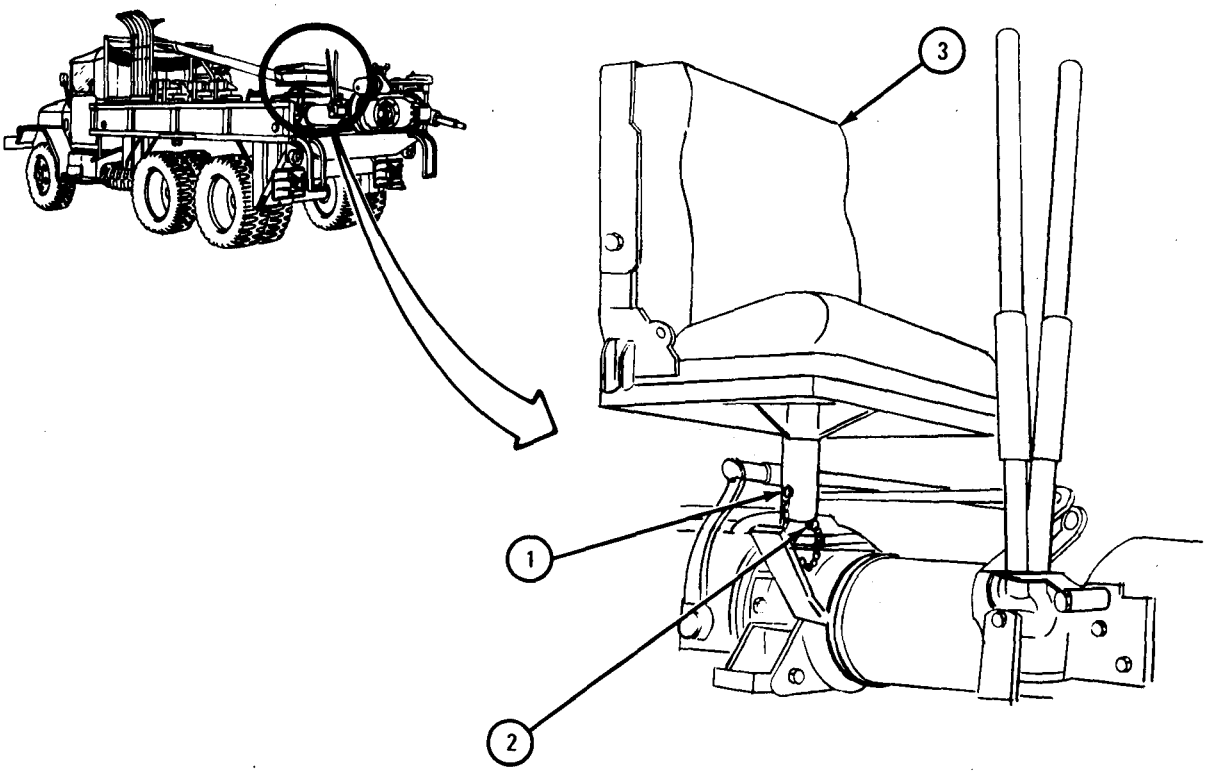

b. Disassembly.

FRAME 1

1. Take out cushion (1).
2. Take out two screws (2) and nuts (3).
3. Take out cushion (4).
4. Take out and throw away cotter pin (5).
5. Take off washer (6) and spring (7).
6. Take out locking pin (8) and handle (9).

GO TO FRAME 2

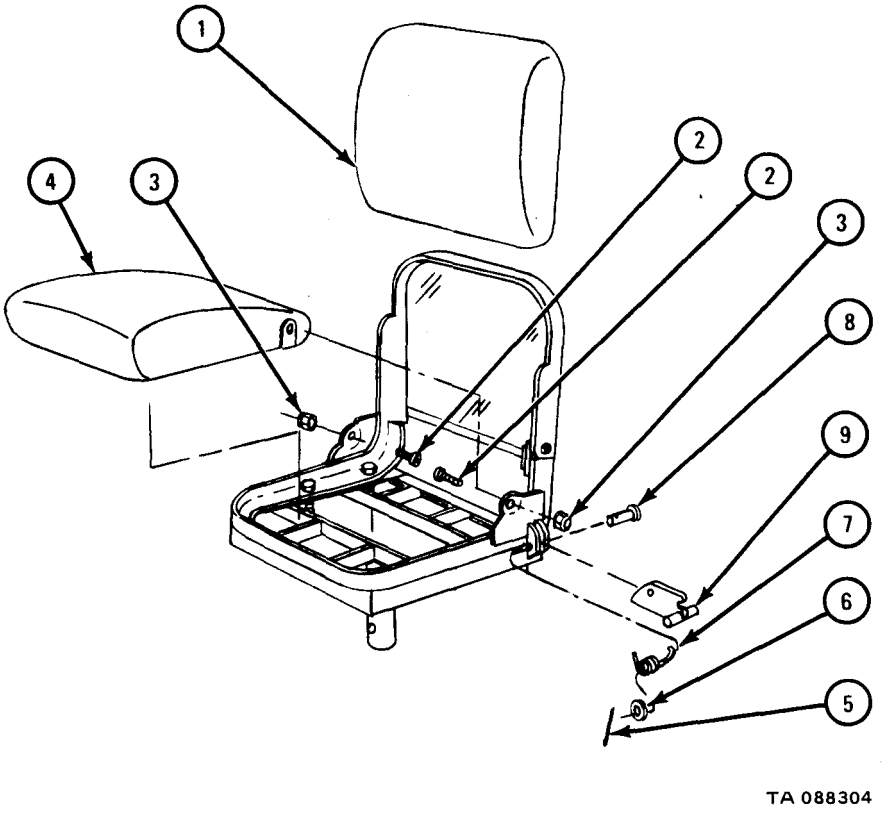

FRAME 2

1. Take off four nuts (1) and washers (2).
2. Take upper frame (3) off lower frame (4).

END OF TASK

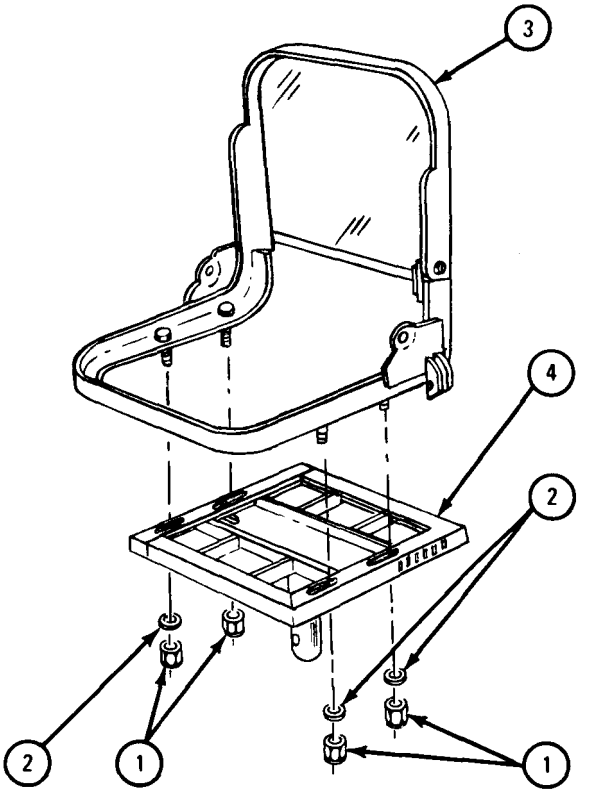

TA 088305

c. Cleaning. There are no special cleaning procedures needed. Refer to cleaning procedures given in Part 1, para 1-3.

d. Inspection and Repair.

FRAME 1

1. Check that upper frame (1) and lower frame (2) are not bent, cracked or damaged and that there are no broken welds. Straighten or weld damaged parts. Refer to FM 43-2 and TM 9-237. If more repair is needed, get new parts.
2. Check that locking pin (3), locking pin (4), handle (5), and spring (6) are not bent, cracked, or damaged.
3. Check that cushions (7 and 8) are not ripped or damaged. If parts are damaged, get new cushions.

END OF TASK

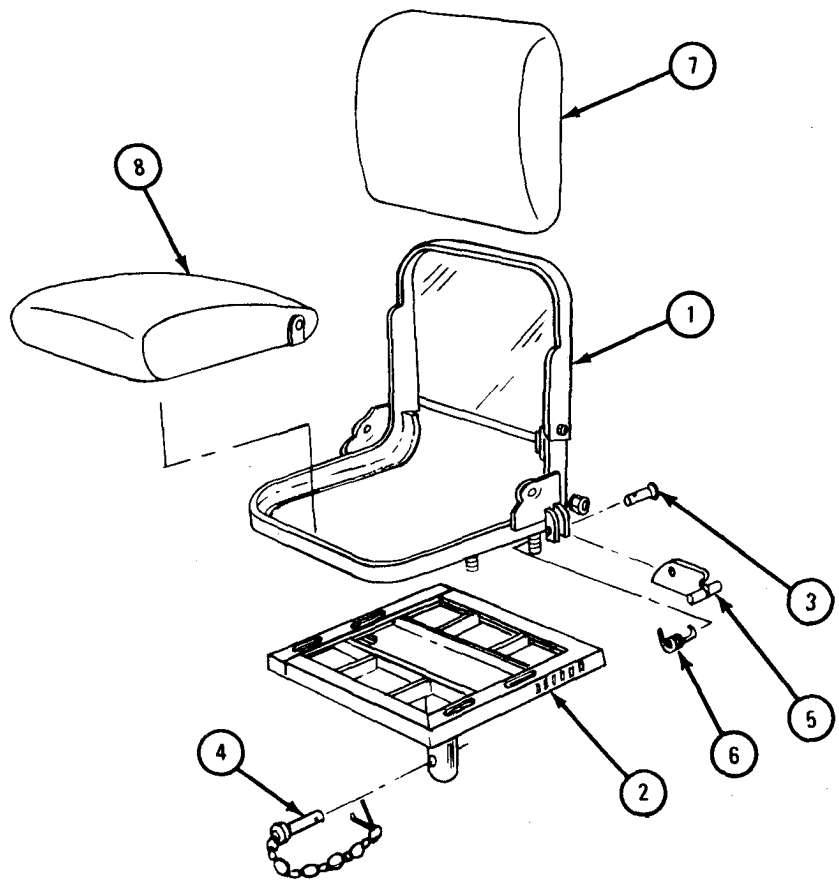

e. Assembly.

FRAME 1

1. Put upper frame (1) on lower frame (2).
2. Put on four nuts (3) and washers (4).

GO TO FRAME 2

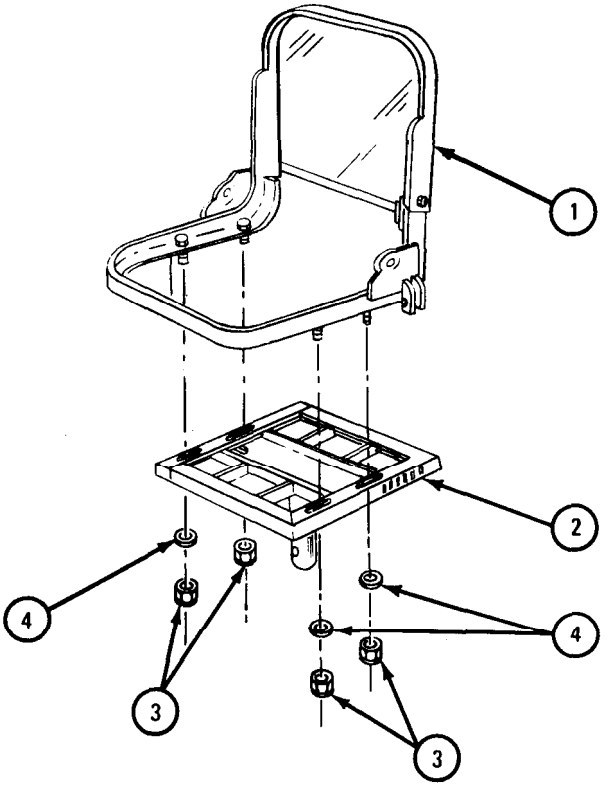

TA 088307

FRAME 2

1. Put on handle (1) and locking pin (2).
2. Put in spring (3), washer (4), and cotter pin (5).
3. Put in cushion (6).
4. Put in two screws (7) and put on two nuts (8).
5. Put in cushion (9).

END OF TASK

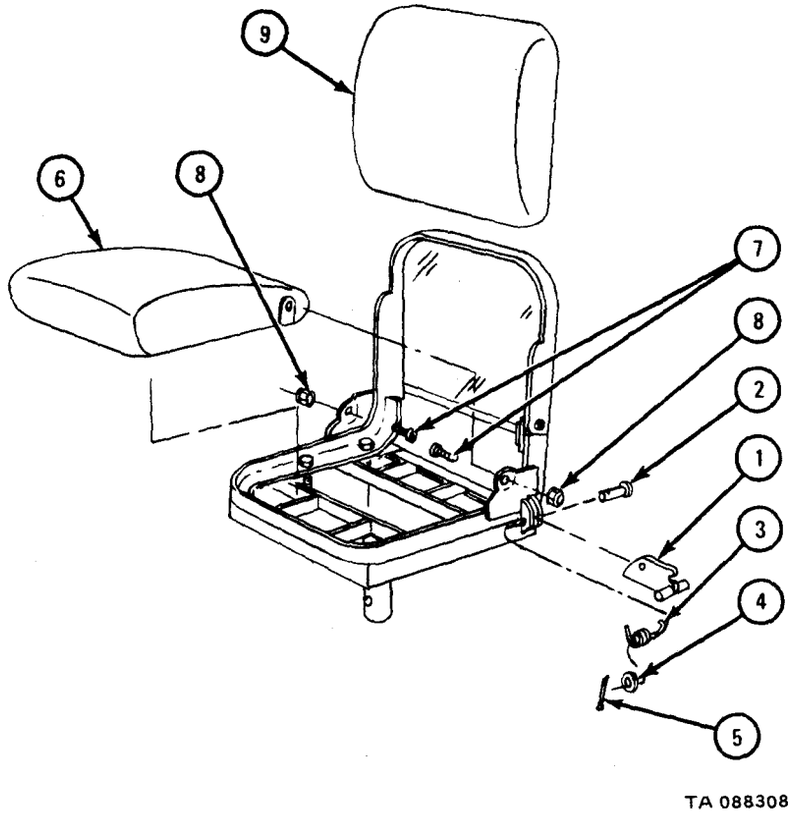

f. Replacement.

FRAME 1

1. Put seat assembly (1) in place.
2. Put in locking pin (2).
3. Put in pin (3).

END OF TASK

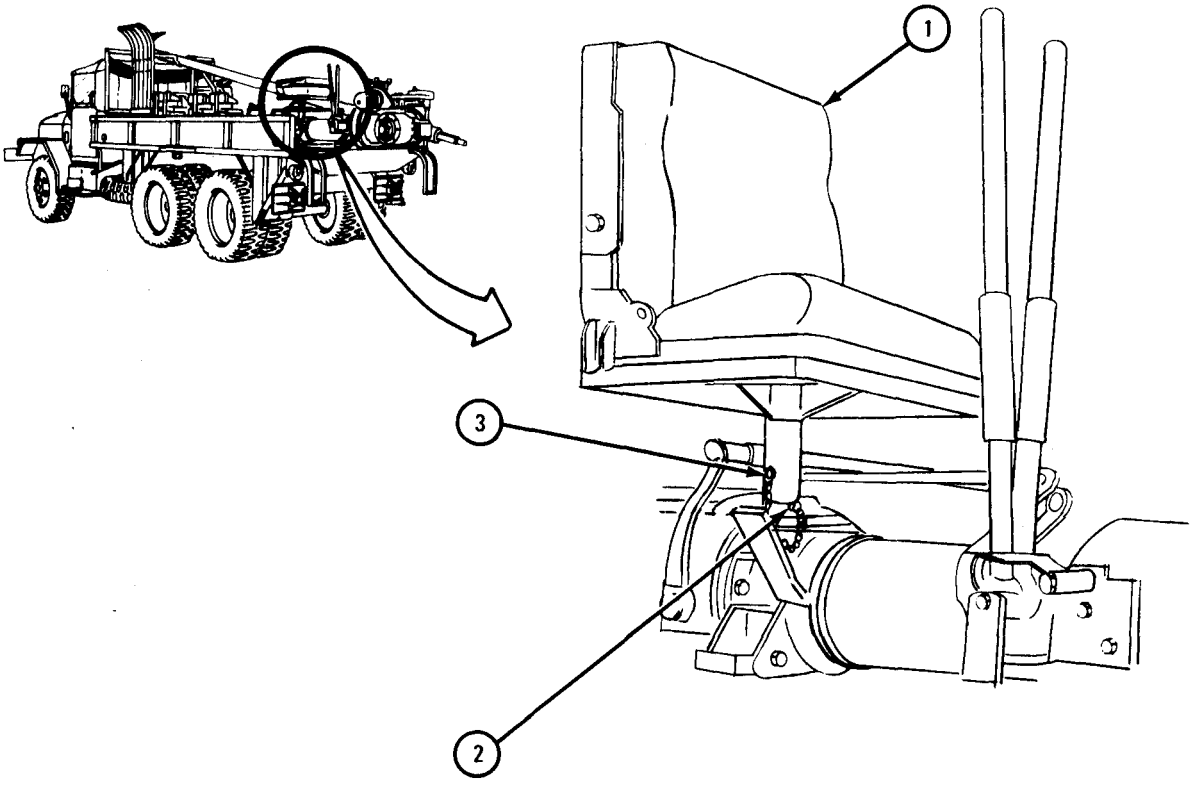

17-45. EARTH BORING MACHINE ASSEMBLY REMOVAL AND REPLACEMENT.

TOOLS: No special tools required

SUPPLIES: Wood blocks

PERSONNEL: Two

EQUIPMENT CONDITION: Truck parked, engine off, handbrake set.

a. Preliminary Procedures.

(1) Remove derrick tube assembly. Refer to para 17-56.

(2) Remove auger rack bar. Refer to para 17-56.

(3) Remove outrigger pump drive shaft. Refer to TM 9-2320-209-20.

(4) Drain oil from supporting tube. Refer to LO 9-2320-209-12/1.

b. Removal.

FRAME 1

1. Take out four nuts (1) and screws (2).
2. Lower rear end of propeller shaft (3).

GO TO FRAME 2

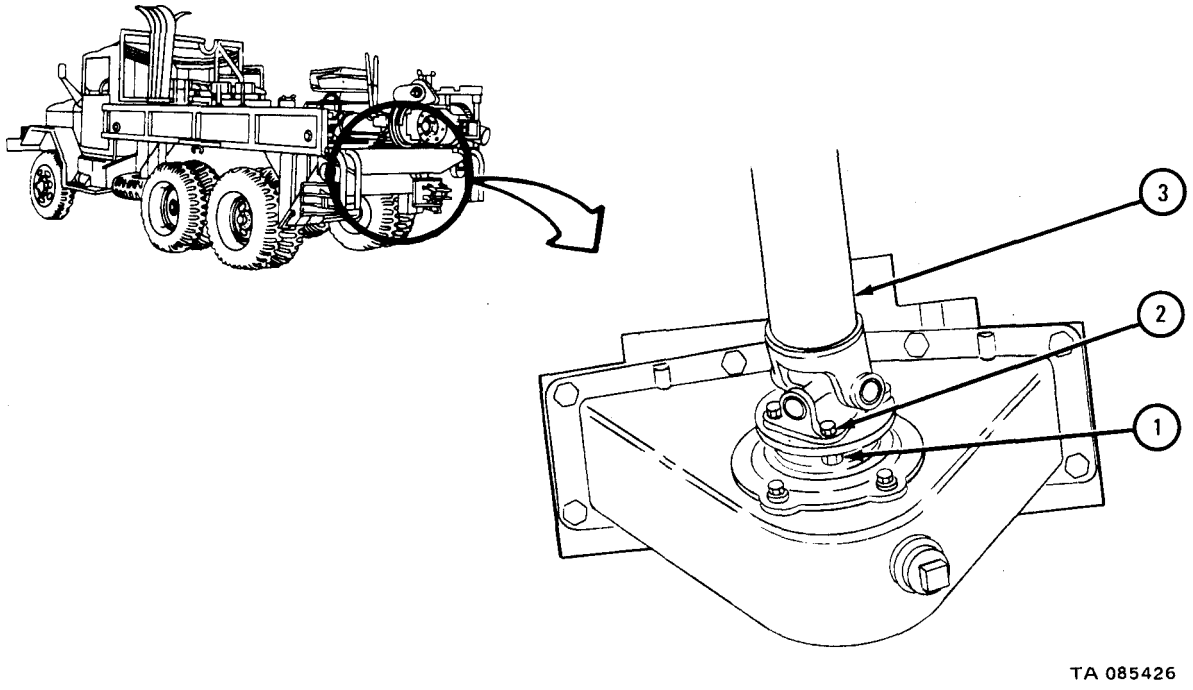

FRAME 2

1. Unlock locking latch (l) on operating controls (2). Take off two cotter pins (3) and clevis pins (4).
2. Take out three cap screws and lockwashers (5). Takeoff operating controls (2).

GO TO FRAME 3

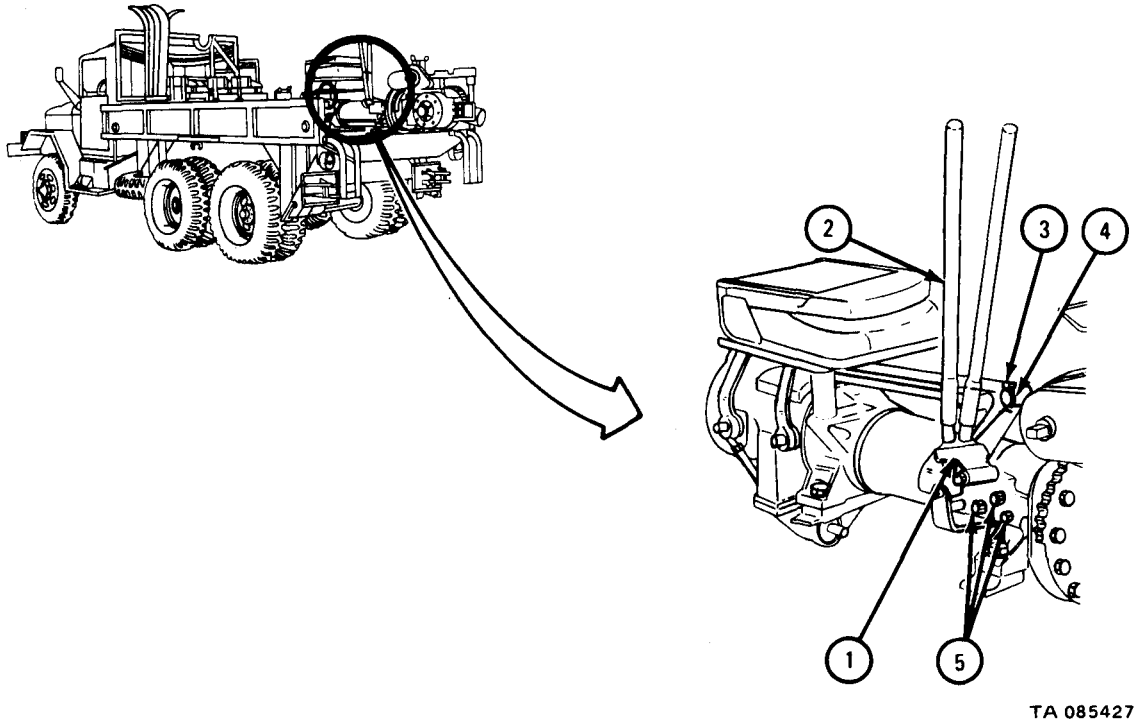

FRAME 3

1. Put chains on boring assembly (1). Hook wrecker to chains. Using hoist, put tension on chains.

2. Take out four screws and lockwashers (2), two on each side of boring assembly (1).

Soldier A 3. Using wrecker, lift boring assembly (1) off truck and put it on wood blocks .

Soldier B 4. Guide boring assembly (1) onto wood blocks as soldier A lifts it.

END OF TASK

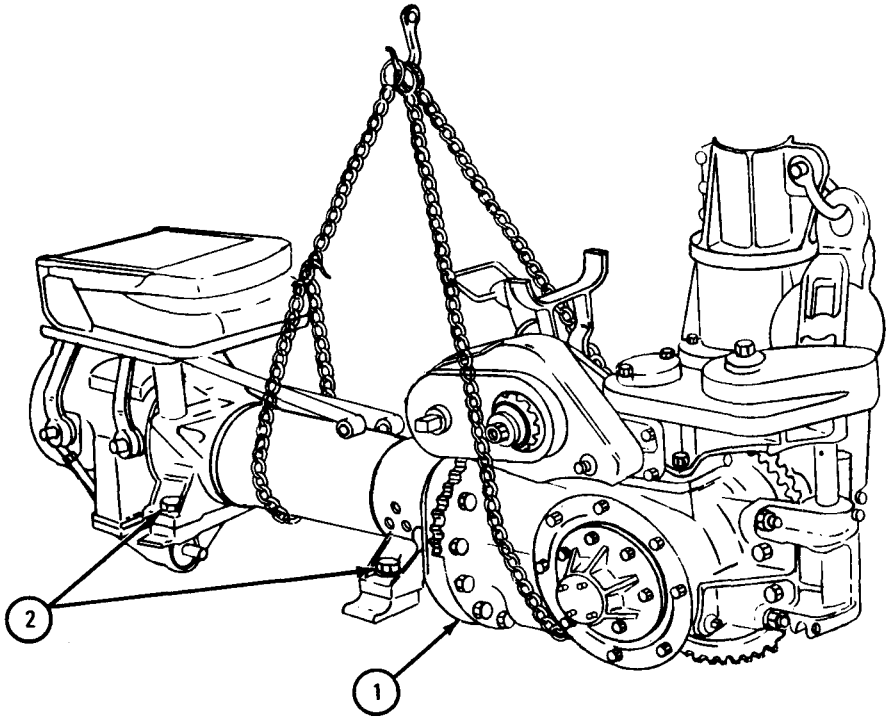

TA 085428

c. Replacement.

FRAME 1

1. Put chains on boring assembly (1). Hook wrecker to chains.

Soldier A 2. Using hoist, put boring assembly in place on truck.

Soldier B 3. Guide boring assembly onto truck as soldier A lifts it.

4. Put in four screws and washers (2), two on each side of boring assembly (1).

GO TO FRAME 2

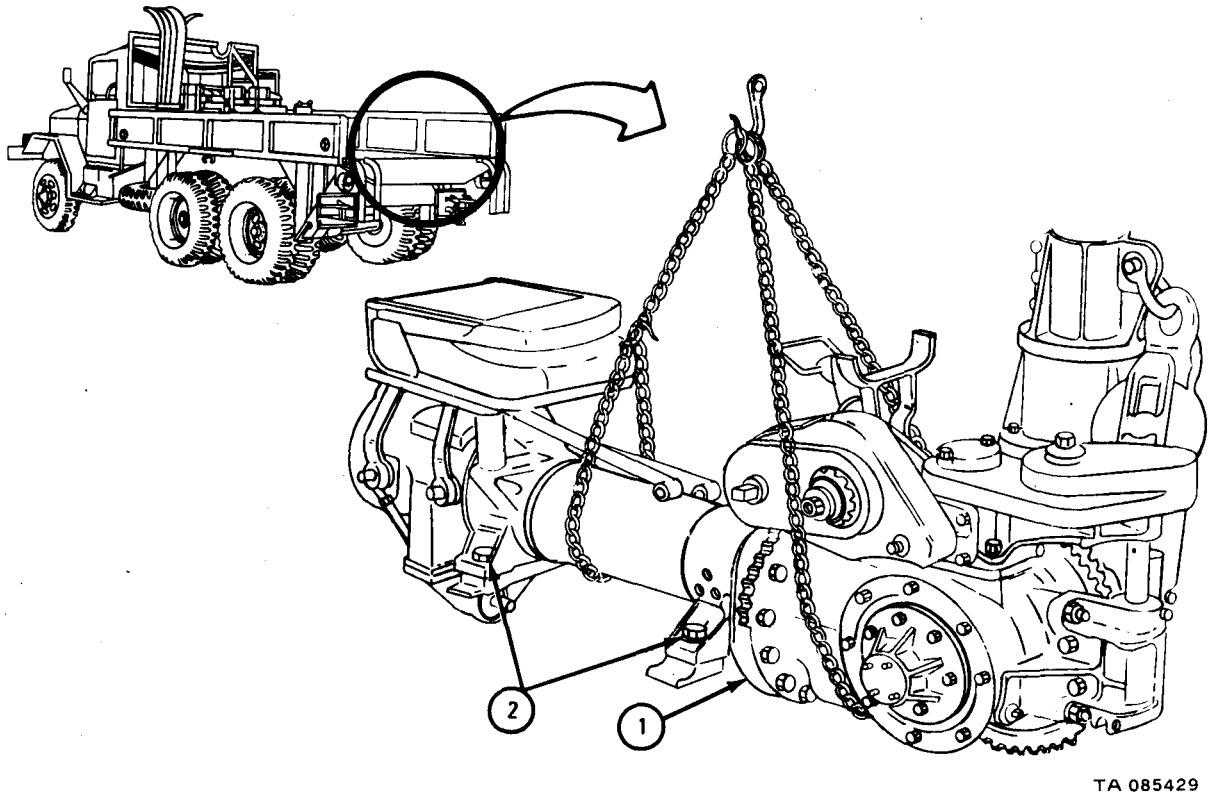

FRAME 2

1. Put two operating controls (1) in place. Put in three screws and lockwashers (2).
2. Put in two clevis pins (3) and cotter pins (4). Lock locking latch (5).

GO TO FRAME 3

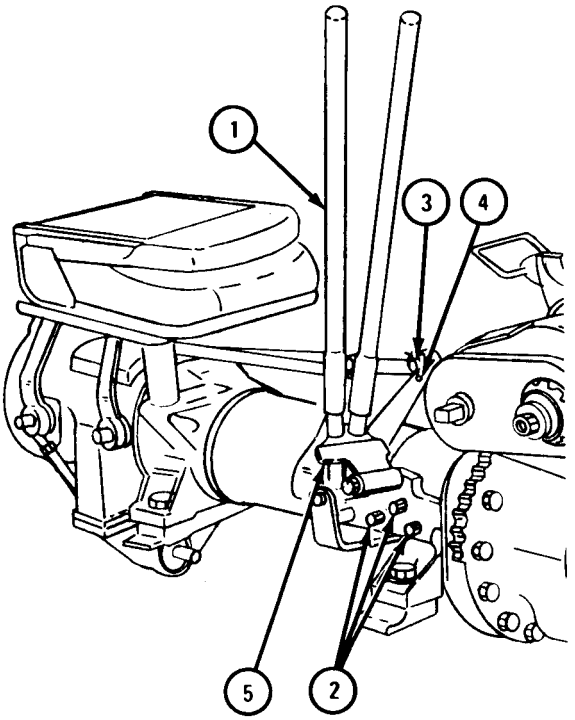

TA 085430

FRAME 3

1. Put propeller shaft (1) in position.
2. Put in four nuts (2) and screws (3) and tighten nuts to 80 to 100 pound-feet.

NOTE

Follow-on Maintenance Action Required:

1. Replace outrigger pump drive shaft. Refer to TM 9-2320-209-20.
2. Replace auger rack bar. Refer to para 17-56.
3. Replace derrick tube assembly. Refer to para 17-56.
4. Lubricate earth boring machine assembly. Refer to LO 9-2320-209-12/1.

END OF TASK

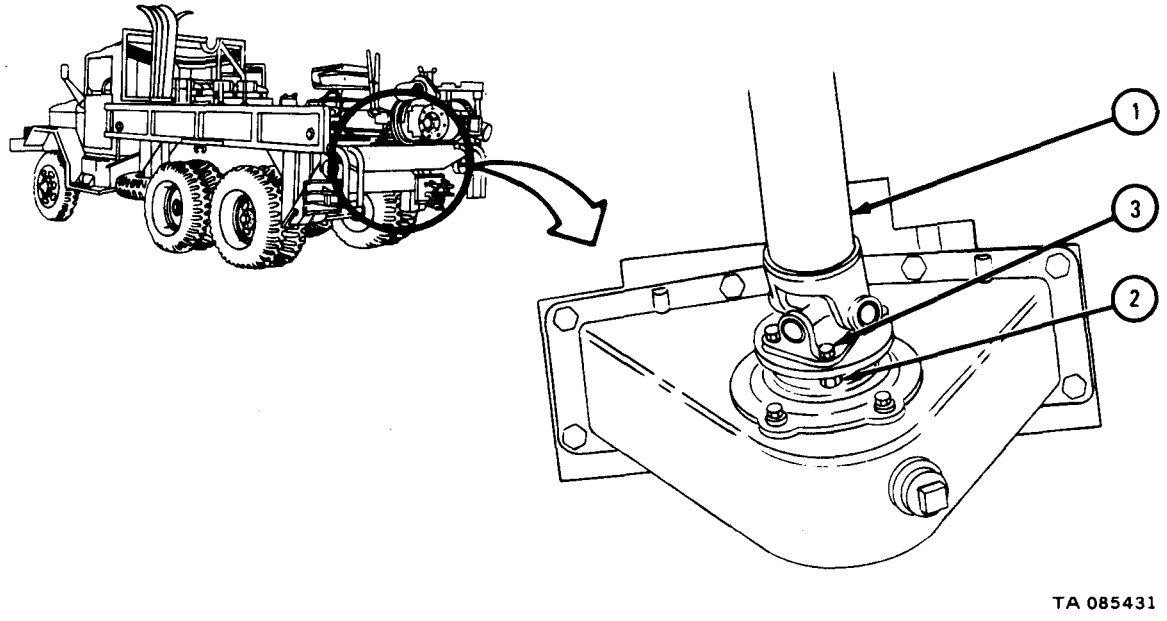

17-46. BORING CASE AND GEARS REMOVAL, REPAIR, AND REPLACEMENT (TRUCK M764).

TOOLS: No special tools required

SUPPLIES: Safety wire
Solvent, dry cleaning, type II (SD-2) Fed. Spec P-D-680
Artillery and automotive grease, type GAA, MIL-G-10924
Shim set, upper and lower rack carrier bearings
Shim set, rack feed idler gear bearings
Shim set, rack drive gear
Spacer, rack carrier upper nut

PERSONNEL: Two

EQUIPMENT CONDITION: Truck parked, engine off, handbrake set.

a. Preliminary Procedure. Remove integral derrick and snatch sheave assembly. Refer to para 17-56.

b. Removal.

FRAME 1

Soldier A 1. Take out six capscrews and lockwashers (1).

Soldiers A and B 2. Take derrick tube base (2) off rack bar (3).

GO TO FRAME 2

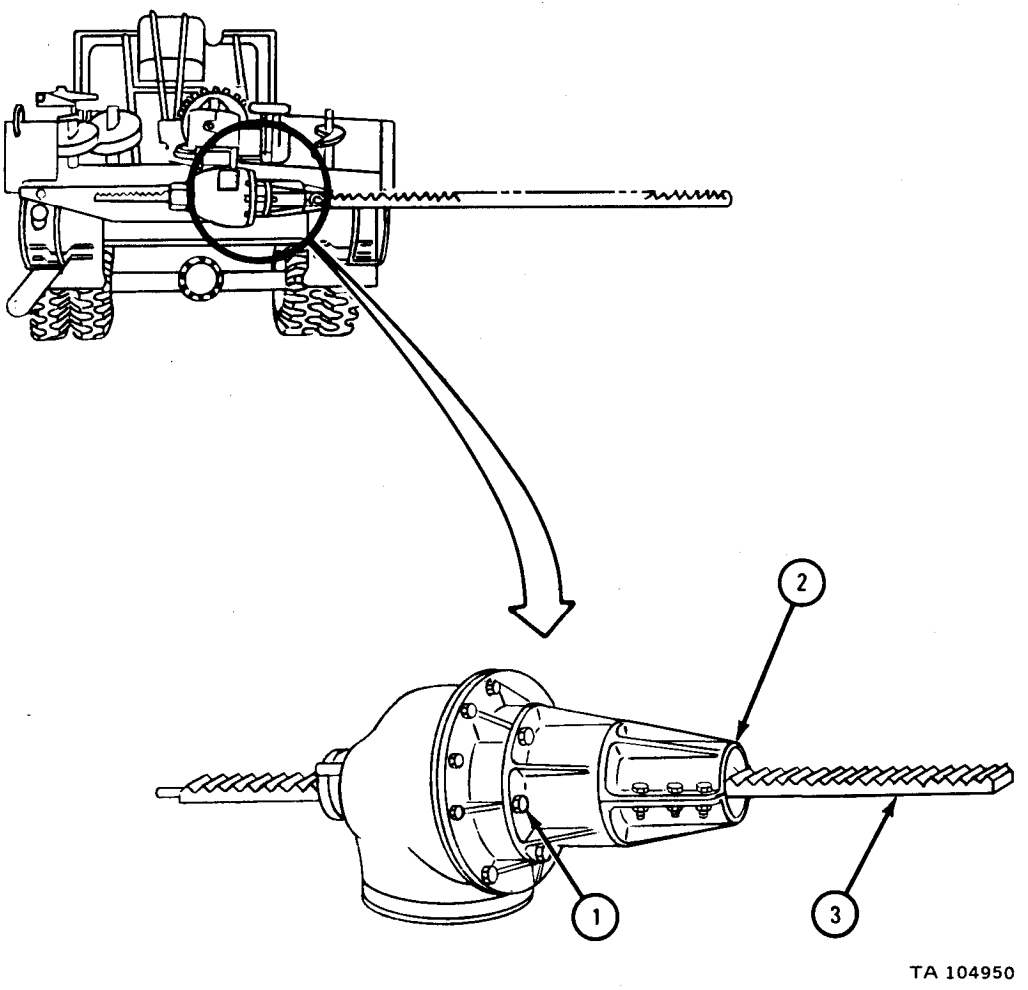

FRAME 2

1. Loosen two machine screws (1).
2. Take out retaining pin (2).
3. Take rack bar guide (3) off rack bar (4).

GO TO FRAME 3

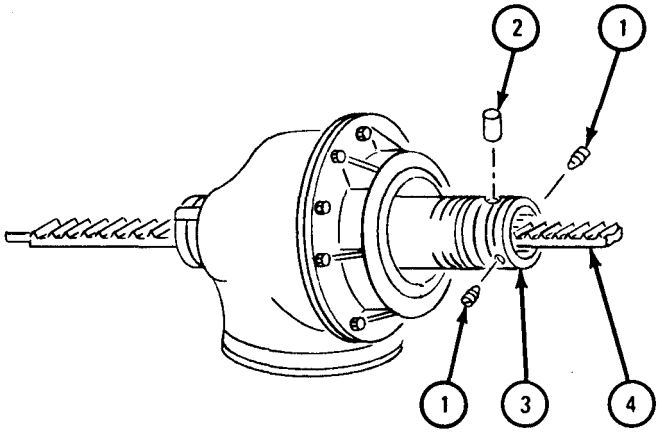

TA 104951

FRAME 3

Soldiers A and B 1. Put chain hoist on rack bar (1) as shown.

WARNING

When removing rack bar (1), be sure it is balanced on chain hoist or it may fall causing damage to equipment or injury to personnel.

Soldier A 2. Balance rack bar (1) when soldier B feels it is out of boring gear case (2).

Soldier B 3. Feed rack bar (1) out of boring gear case (2), until it disengages. Refer to Operation of Earth Boring Machine and Polesetter Trucks, TM 9-2320-209-10.

Soldiers A and B 4. Pull out rack bar (1).

GO TO FRAME

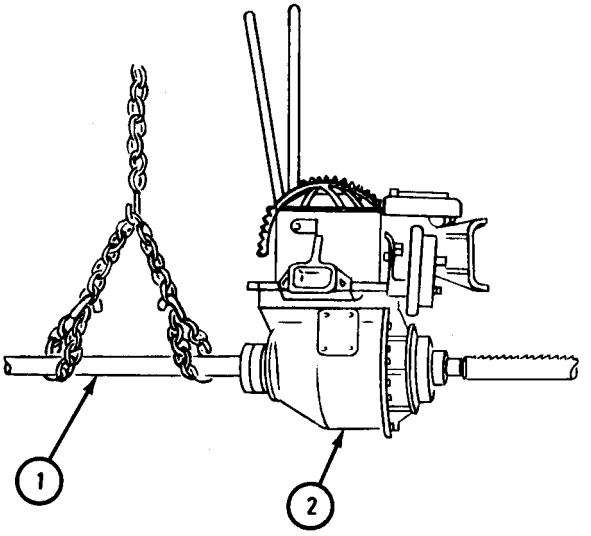

FRAME 4

1. Use ratchet wrench to turn horizontal leveling worm assembly until boring gear case (1) is vertical. Refer to Operation of Earth Boring Machine and Pole setter Trucks, TM 9-2320-209-10.
2. Loosen two cap screws (2).
3. Take off rack carrier nut (3) and spacers (4).
4. Note and record thickness of spacers (4) for use during replacement. Throw away spacers.

GO TO FRAME 5

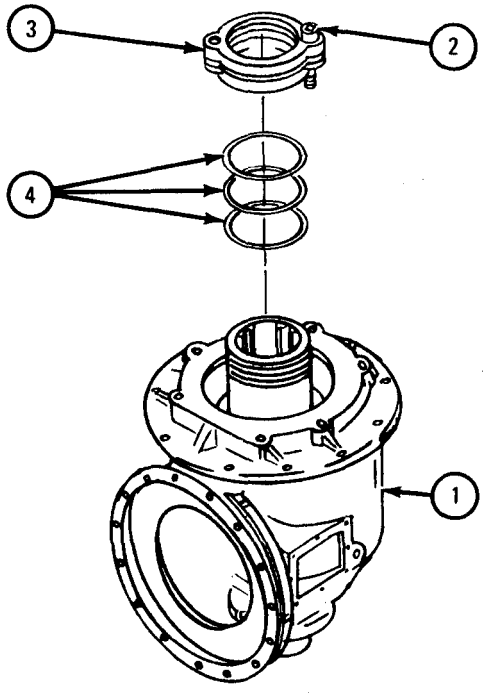

TA 104953

FRAME 5

1. Take off four rack thrust plates (1).
2. Take out nine capscrews (2) and lockwashers (3).
3. Take out level mounting assembly (4) and lockwasher (5).

Soldiers A and B

4. Take off boring case cover (6).

GO TO FRAME 6

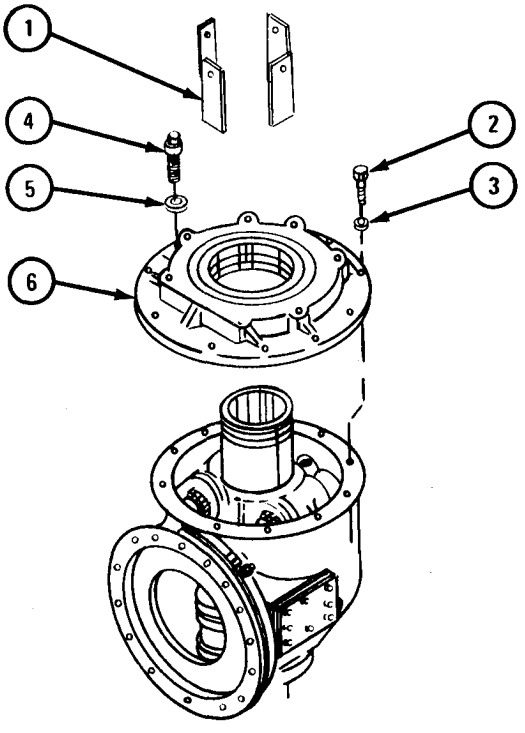

TA 104954

FRAME 6

1. Loosen two cap screws (1) and take off rack carrier nut (2).
2. Take off four rack thrust plates (3) and thrust plate retainer (4).
3. Drain lubricant from boring gear case (5). Refer to LO 9-2320-209-12/1.

GO TO FRAME 7

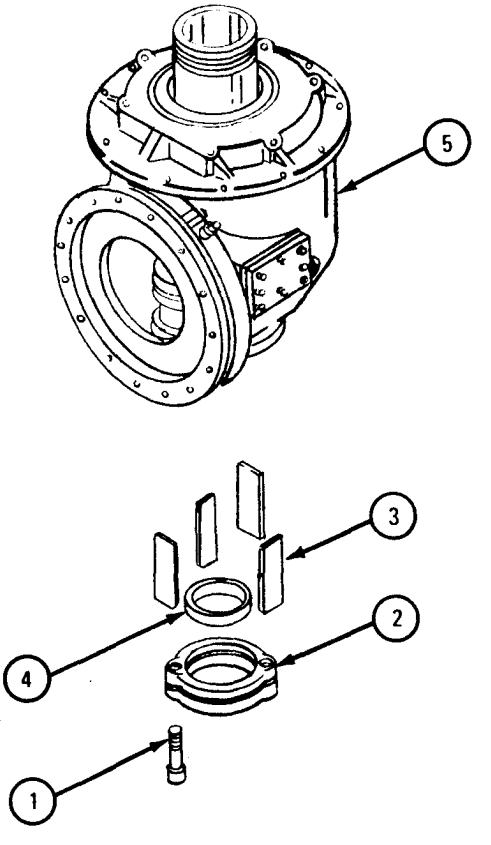

TA 104955

FRAME 7

1. Put on rack carrier nut (1) taken off in frame 4, step 3.
2. Take out two capscrews and lockwashers (2).
3. Put on chain hoist (3) as shown.
4. Put in two cap screws and lockwashers (2).

Soldier A 5. Guide boring gear case assembly (4) when soldier B takes it out.

Soldier B 6. Take out boring gear case assembly (4).

7. Take off chain hoist (3) and rack carrier nut (1).

END OF TASK

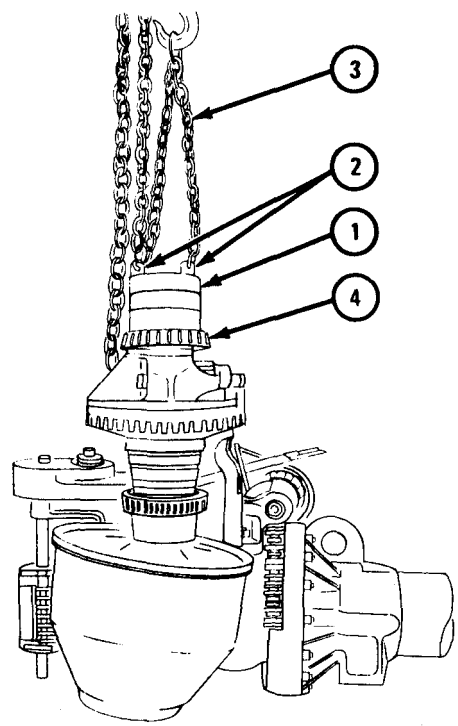

TA 104956

c. Disassembly.

FRAME 1

1. Take off roller bearing cone (1) and shims (2). Note and record thickness of shims for use during assembly.
2. Take out cotter pin (3).
3. Take off slotted hexnut (4).
4. Put two 3/8-24UNF capscrews (5) in thrust bearing (6). Pull off thrust bearing. Take out two 3/8-24UNF capscrews.

GO TO FRAME 2

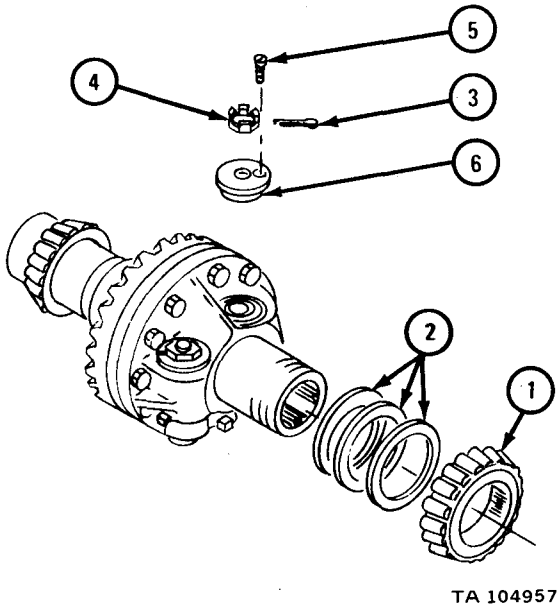

FRAME 2

1. Take out roller shaft (1).
2. Take out rack thrust roller (2) with roller bearing (3). Take roller bearing out of rack thrust roller.

GO TO FRAME 3

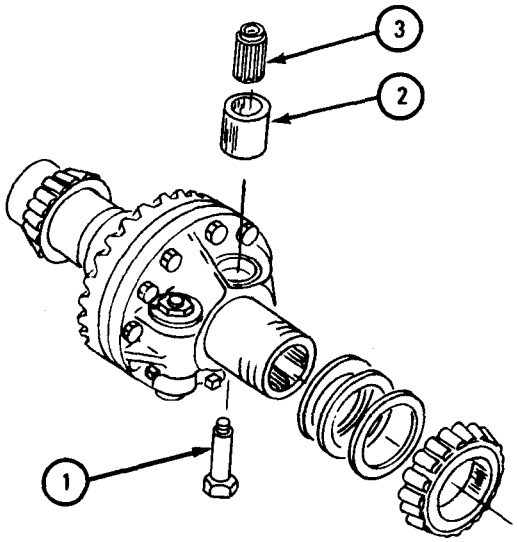

TA 104958

FRAME 3

1. Take out cotter pin (1).
2. Take off slotted hexnut (2).
3. Put two 3/8-24UNF capscrews (3) in thrust bearing (4). Pull out thrust bearing. Take out two 3/8-24UNF capscrews.

GO TO FRAME 4

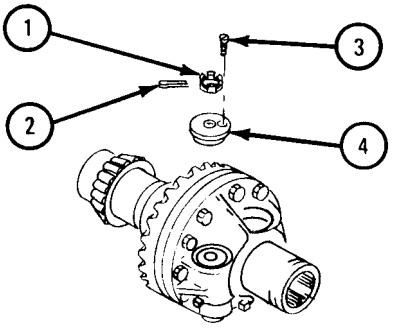

TA 104960

FRAME 4

1. Cut and take off locking wire (1).
2. Loosen setscrew (2).
3. Take out rack feed gear shaft (3).
4. Take out rack feed gear (4).
5. Take two bearings (5) out of rack feed gear (6).

GO TO FRAME 5

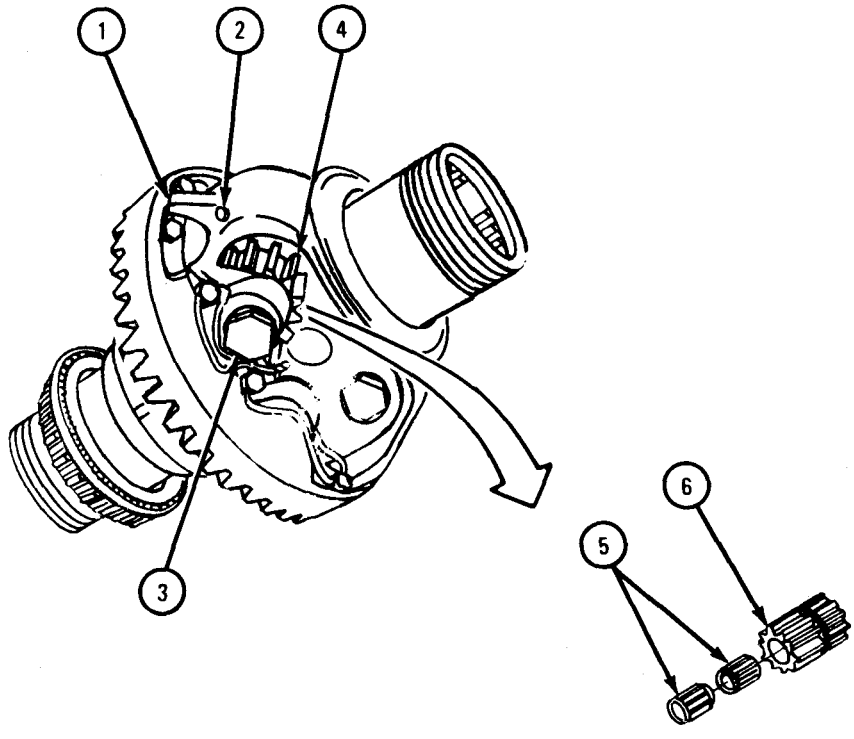

TA 104961

FRAME 5

1. Cut and take off safety wire (1).
2. Take out setscrew (2) and rack feed spur pinion shaft (3).
3. Take out spur pinion (4).
4. Take out inner roller bearing (5) and outer roller bearing (6).
5. Take out thrust washer (7).

GO TO FRAME 6

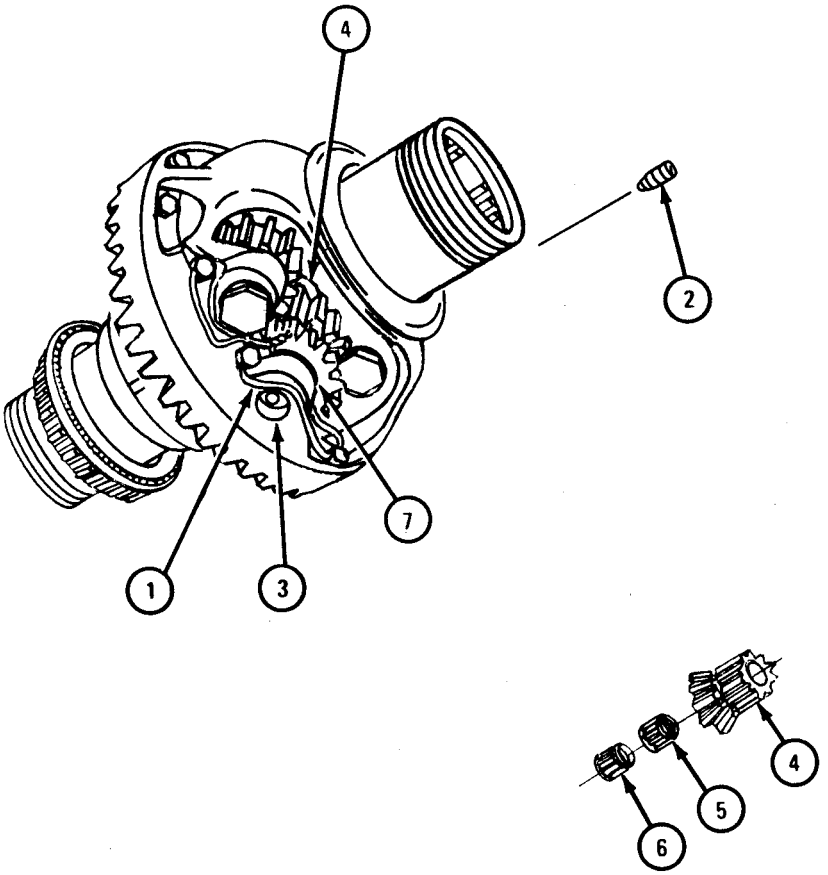

FRAME 6

1. Cut and take off locking wire (1).
2. Take out nine bolts (2) and three machine screws (3).
3. Take off rack drive gear (4) and rack drive gear shims (5). Note and record thickness of shims for use during assembly.

GO TO FRAME 7

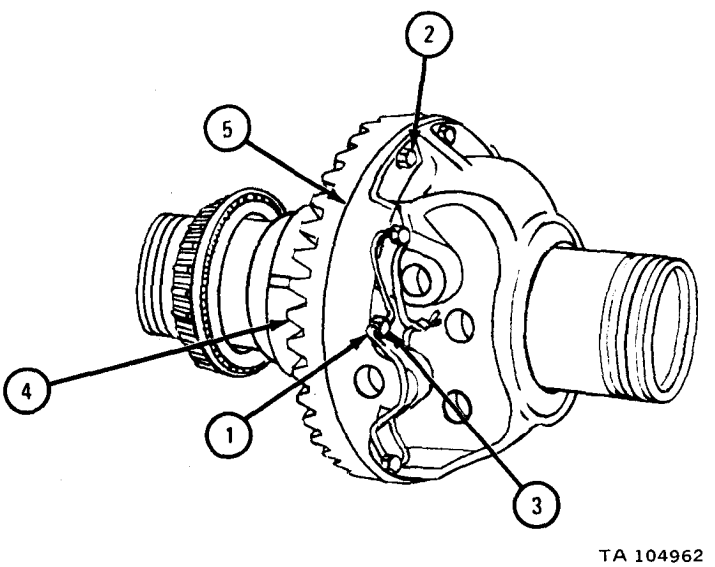

FRAME 7

1. Take off bearing cone (1) and shims (2). Note and record thickness of shims for use during assembly. Throw away shims.
2. Take off spacer sleeve (3).
3. Bend tabs on lockwasher (4) away from two bearing adjusting nuts (5).
4. Using spanner wrench, take off two bearing adjusting nuts (5) and lockwasher (4).

GO TO FRAME 8

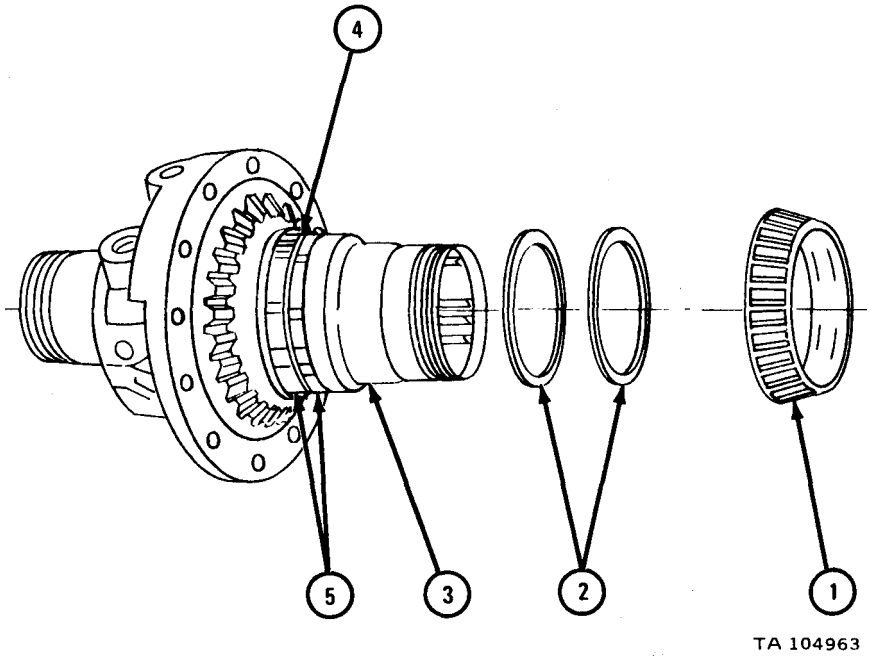

FRAME 8

1. Take off roller bearing (1), rack feed idler gear (2), roller bearing (3), and shims (4).
2. Note and record thickness of shims (4) for use during assembly. Throw away shims.

END OF TASK

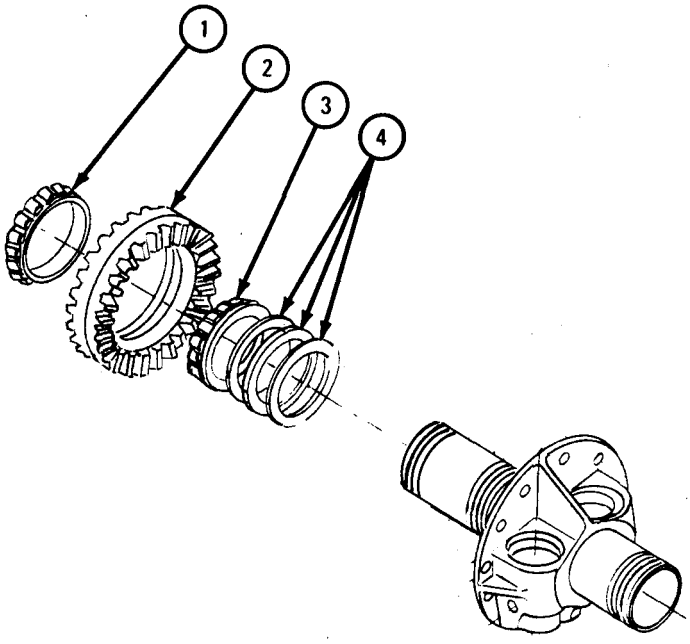

TA 104964

d. Cleaning. Clean all parts with dry cleaning solvent.

WARNING

Dry cleaning solvent is flammable. Do not use near an open flame. Keep a fire extinguisher nearby when solvent is used. Use only in well-ventilated places. Failure to do this may result in injury to personnel and damage to equipment.

e. Inspection.

FRAME 1

1. Check that rack feed gear (1), rack feed spur pinion (2), rack drive gear (3), and rack feed idler gear (4) have no burrs, chips, cracks, worn or or damaged teeth.
2. Check that bearing cones (5) and bearings (6) are not damaged. Refer to Part 1, para 10-8.

GO TO FRAME 2

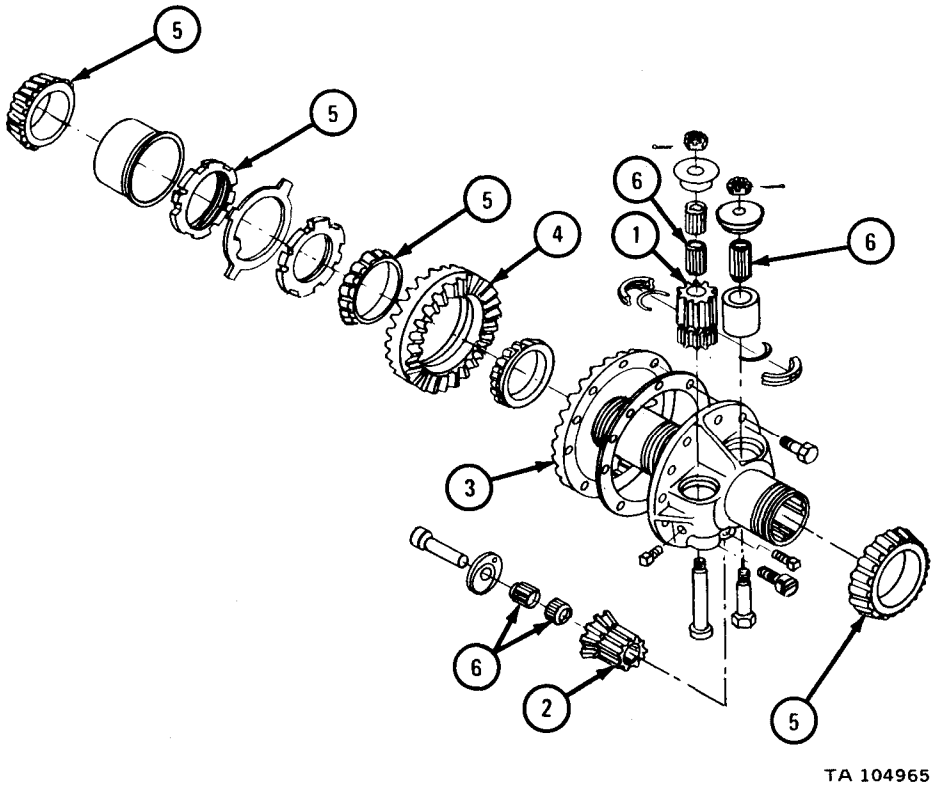

FRAME 2

1. Check that spur pinion shaft (1), feed spur shaft (2), thrust roller shaft (3), and tube and rack carrier (4) have no burrs, chips, cracks, or twisted splines.
2. Check that oil seal is not dried or cracked.

GO TO FRAME 3

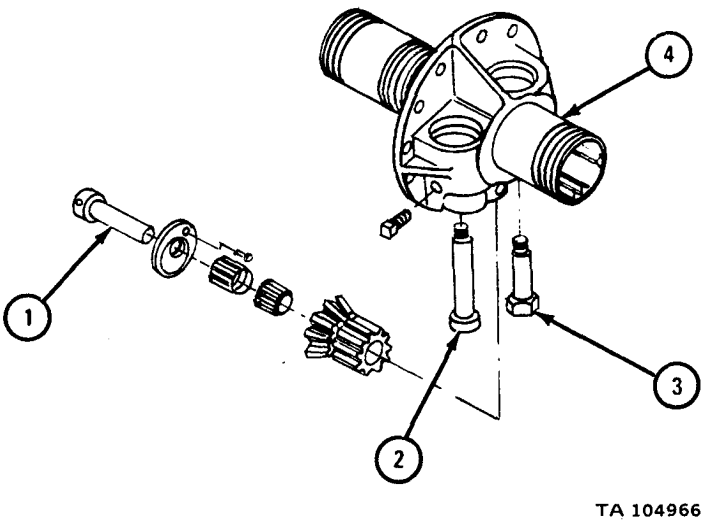

FRAME 3

1. Measure thickness of four thrust plates (1).
2. Measure thickness of four thrust plates (2).
3. Measure outside diameter of rack thrust roller (3).
4. Measure thickness of spur pinion thrust washer (4).

END OF TASK

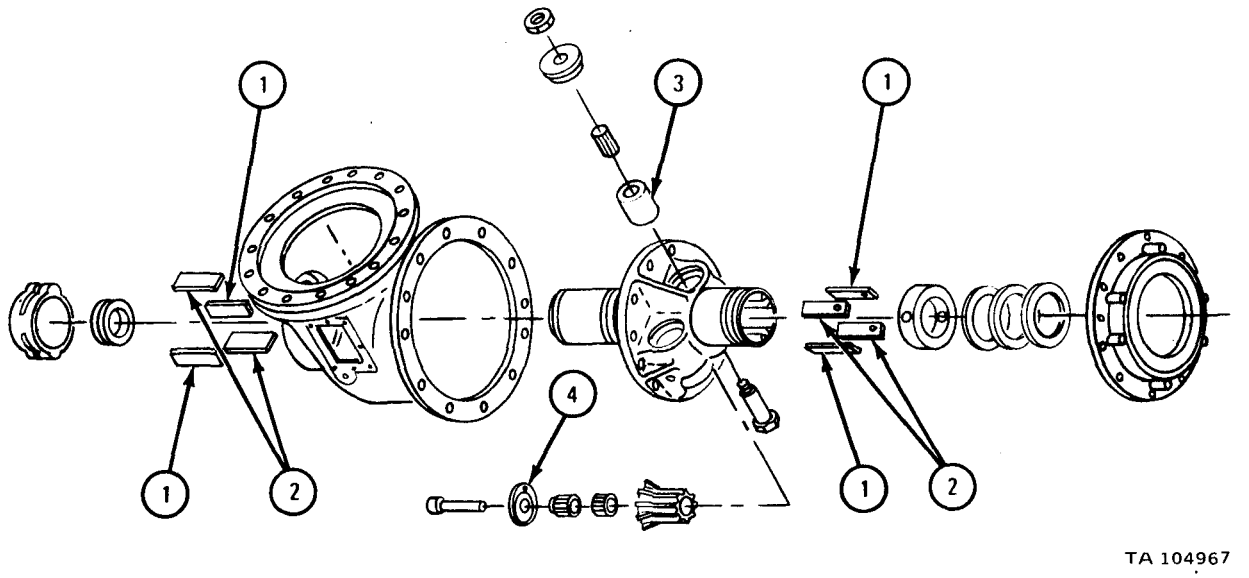

Table 17-3. Boring Case Gear Assembly Wear Limits

Index Number	Item /Point of Measurement	Size and Fit of New Parts (inches)	Wear Limits (inches)
1	Thrust plate	0.307 to 0.313	0.302 to 0.305
2	Thrust plate	0.370 to 0.376	0.365 to 0.368
3	Rack thrust roller	3.328 to 3.330	3.313 to 3.315
4	Spur pinion thrust washer	0.140 to 0.145	0.130 to 0.135

f. Repair. Small nicks, scratches, and burrs can be removed. If parts are damaged in any other way, throw parts away and get new ones.

f. Assembly.

FRAME 1

1. Put in thrust washer (1) and hold in place.
2. Put rack feed spur pinion (2) in place.
3. Put in spur pinion shaft (3).
4. Put in setscrew (4).

GO TO FRAME 2

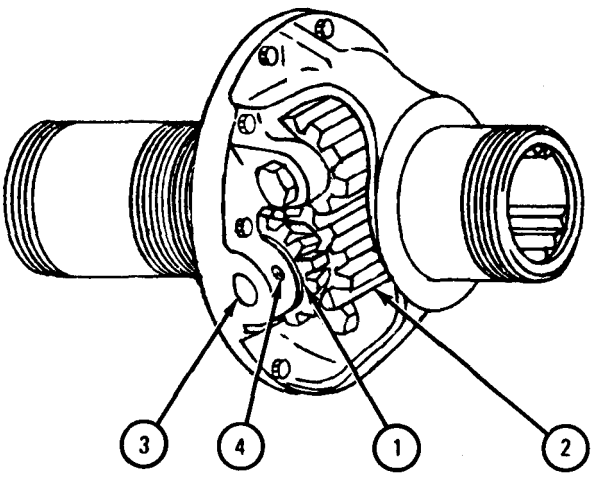

TA 104970

FRAME 2

1. Pack two roller bearings (1) with grease.
2. Put two roller bearings (1) in rack feed spur gear (2).
3. Put in and hold rack feed spur gear (2).
4. Put in rack feed gear shaft (3).
5. Put on thrust bearing (4) and slotted hexnut (5).
6. Aline slotted hexnut (5) with hole in rack feed gear shaft (3). Put in cotter pin (6).
7. Put in setscrew (7).

GO TO FRAME 3

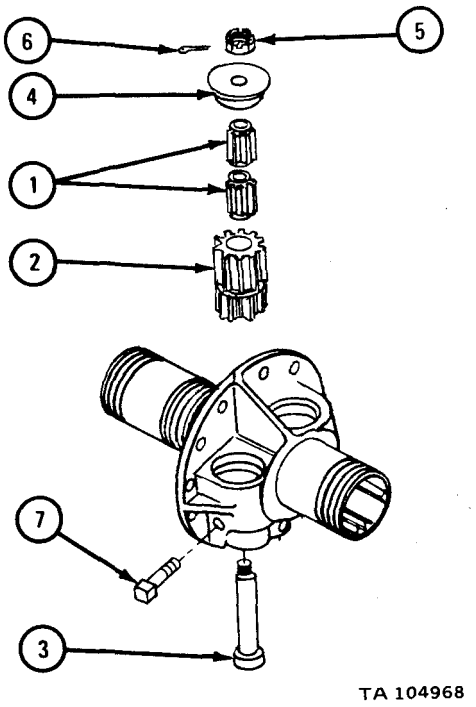

FRAME 3

1. Pack inner roller bearing (1) and outer roller bearing (2) with grease.
2. Put inner roller bearing (1) and outer roller bearing (2) in rack feed spur pinion (3).

GO TO FRAME 4

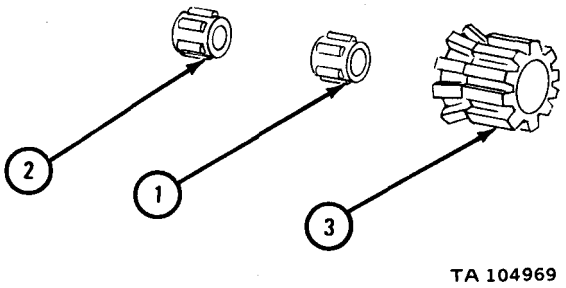

FRAME 4

1. Pack roller bearing (1) with grease.
2. Put roller bearing (1) in rack thrust roller (2).
3. Put rack thrust roller (2) and thrust bearing (3) in rack carrier (4).
4. Put in rack thrust roller shaft (5).
5. Put on slotted hexnut (6) and aline with hole in rack thrust roller shaft (5). Put in cotter pin (7).

GO TO FRAME 5

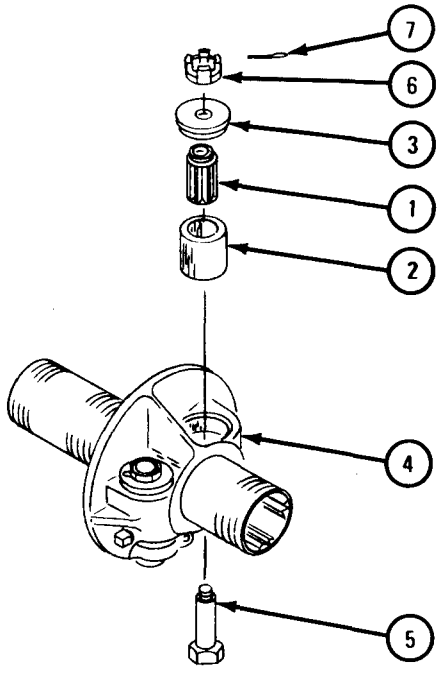

TA 104971

FRAME 5

NOTE

Shims (1) must be the same thickness as noted in removal.

1. Put on shims (1).
2. Pack upper tapered roller bearing (2) with grease. Put on roller bearing.

GO TO FRAME 6

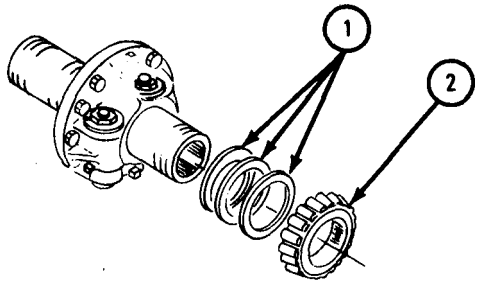

TA 104972

FRAME 6

NOTE

Shims (1) must be same thickness as noted in removal.

1. Put on shims (1) and rack drive gear (2) and aline screw holes.
2. Put in nine bolts (3) and three machine screws (4).

GO TO FRAME 7

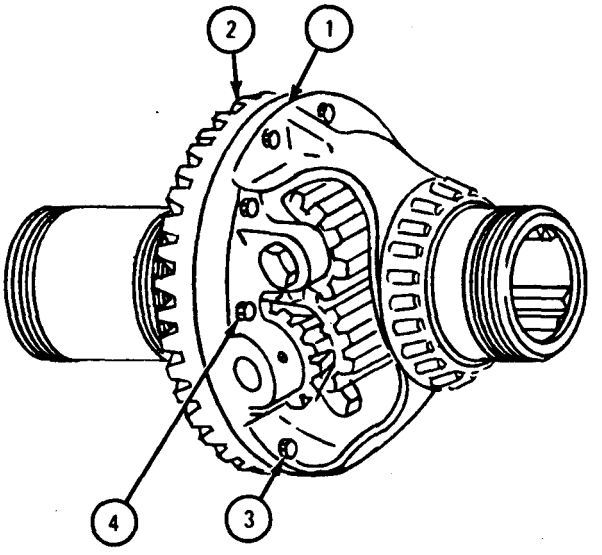

TA 104973

FRAME 7

NOTE

Shims (1) must be same thickness as noted in removal.

1. Put in shims (1).
2. Pack two roller bearing cones (2 and 3) with grease.
3. Put on roller bearing cone (2), rack feed idler gear (4), and roller bearing cone (3).
4. Using spanner wrench, put on bearing adjusting nut (5).

GO TO FRAME 8

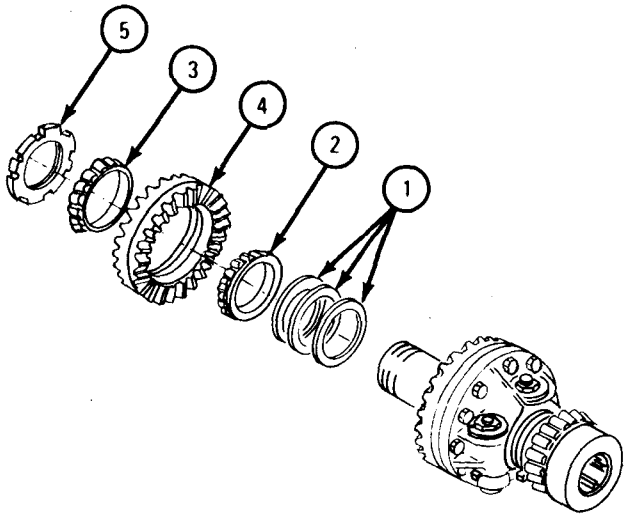

TA 104974

FRAME 8

1. Mount dial indicator (1) as shown. Set dial indicator to 0.
2. Turn rack feed spur pinion (2) to the right until rack feed spur pinion tooth (3) touches rack feed idler gear tooth (4) as shown in view A. Note reading on dial indicator (1).
3. Turn rack feed spur pinion (2) to the left until rack feed spur pinion tooth (5) touches rack feed idler gear tooth (4) as shown in view B. Note reading on dial indicator (1).

IF READING ON DIAL INDICATOR IS NOT BETWEEN .006 INCH AND .035 INCH, GO TO FRAME 9.
IF READING ON DIAL INDICATOR IS BETWEEN .006 INCH AND .035 INCH, GO TO FRAME 10

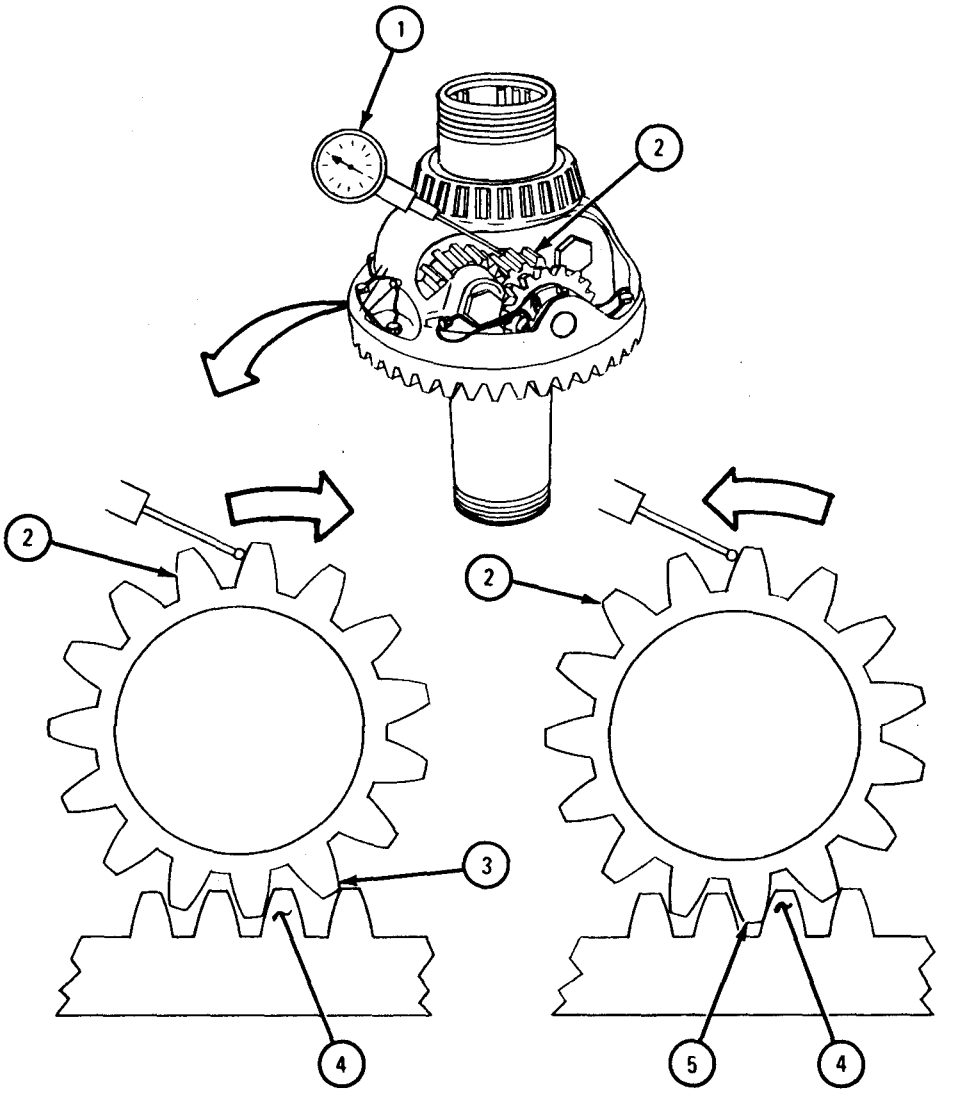

VIEW A

VIEW B

TA 104975

FRAME 9

1. If dial indicator reading noted in frame 8 is less than .006-inch, do the following:
   a. Using spanner wrench, take off bearing adjusting nut (1).
   b. Take off roller bearing core (2), rack feed idler gear (3), and roller bearing cone (4).
   c. If dial indicator reading noted in frame 8 is less than .006-inch, take off one shim (5).
   d. If dial indicator reading noted in frame 8 is more than .035-inch, put on one shim (5).
   e. Put on roller bearing cone (4), rack feed idler gear (3), and roller bearing cone (2).
   f. Using spanner wrench, put on bearing adjusting nut (1).
   g. Do frame 8 again.

GO TO FRAME 8

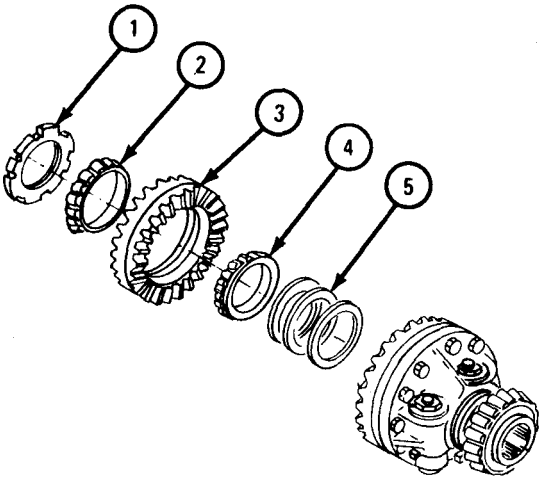

TA 104976

FRAME 10

1. Put on lockwasher (1).
2. Using spanner wrench, put on bearing adjusting nut (2).
3. Bend tabs on lockwasher (1) against two bearing adjusting nuts (2 and 3).
4. Put on sleeve spacer (4).

NOTE

Shims (5) must be same thickness as noted in removal.

5. Put on shims (5).
6. Pack lower tapered roller bearing (6) with grease. Put on roller bearing.

END OF TASK

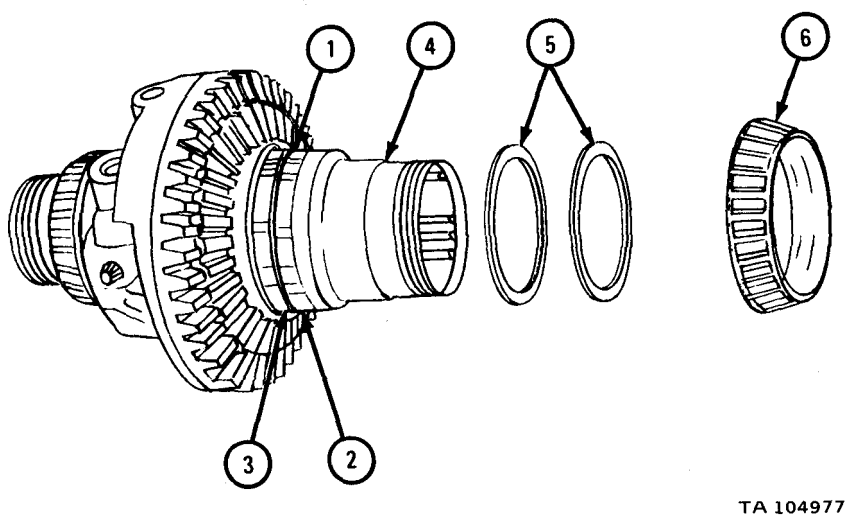

h. Replacement.

FRAME 1

Soldier A 1. Put on rack carrier nut (1).

2. Put chain hoist (2) in place as shown. Put in two capscrews with flat washers (3).

Soldier B 3. Guide boring case gear assembly (4) in place when soldier A lowers it into boring gear case (5).

Soldier A 4. Lower boring case gear assembly (4) into boring gear case (5).

5. Take out two capscrews with flat washers (3). Take off chain hoist (2) .

6. Take out rack carrier nut (1).

GO TO FRAME 2

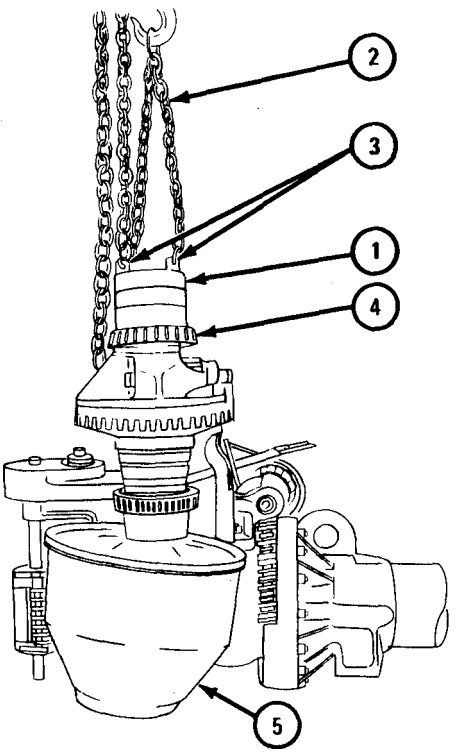

TA 105201

FRAME 2

Soldiers A and B

1. Put boring case cover (1) in place and aline screw holes. Put in nine capscrews (2) and lockwashers (3).
2. Put in level mounting assembly (4) and lockwasher (5).

GO TO FRAME 3

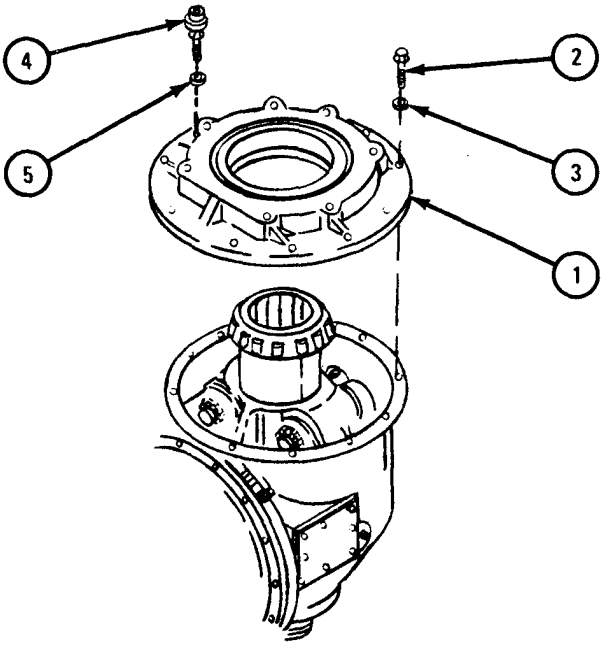

TA 105202

FRAME 3

1. Take off eight machine bolts (1) and lockwashers (2).
2. Take off inspection cover (3) and gasket (4). Throw away gasket.

GO TO FRAME 4

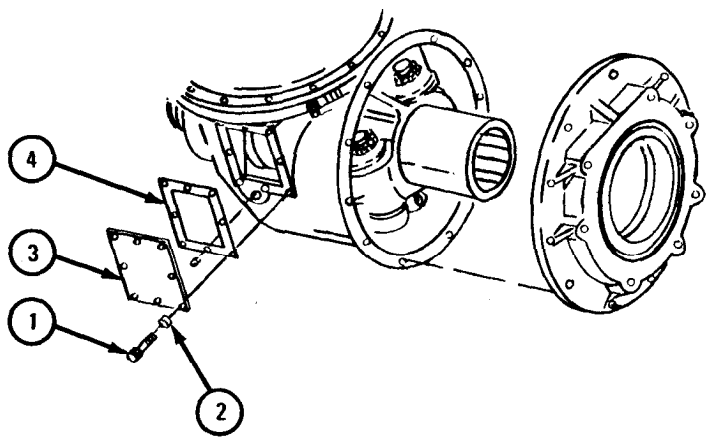

TA 105203

FRAME 4

1. Working through inspection hole (1), check that front edge and intermediate case second reduction drive pinion (2) is alined with front edge of boring case rack drive gear (3) as shown.
2. If gears are not alined, note position of gears.

IF GEARS ARE NOT ALINED, GO TO FRAME 5.
IF GEARS ARE ALINED, GO TO FRAME 6

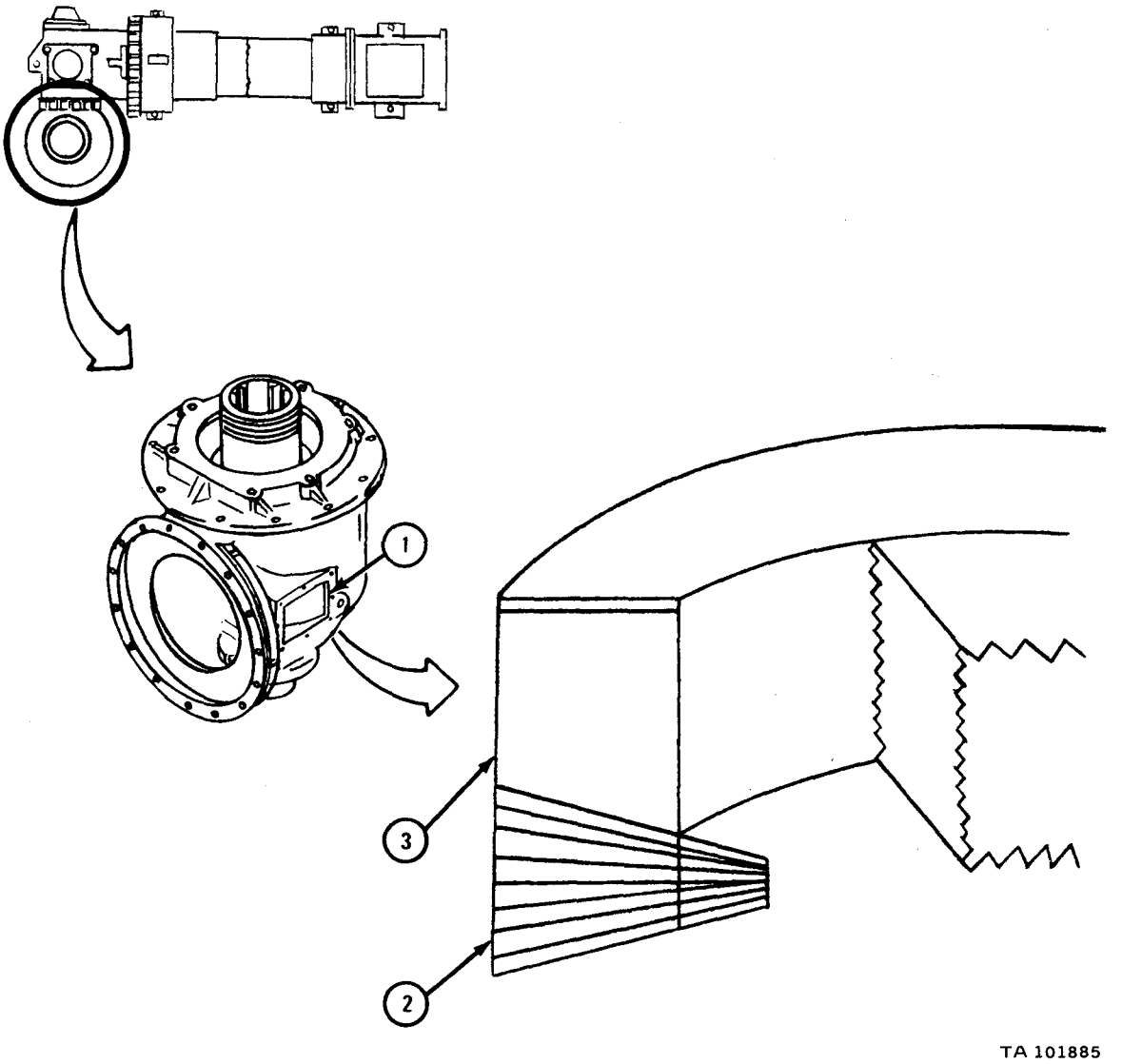

FRAME 5

1. Remove and disassemble intermediate gear assembly. Refer to para 17-47.
2. If intermediate case second reduction drive pinion (1) and boring case rack drive gear (2) are alined as noted in frame 4 and shown in view A, add one second reduction feed pinion bearing shim (3).
3. If intermediate case second reduction drive pinion (1) and boring case rack drive gear (2) are alined as noted in frame 4 and shown in view B, take out one second reduction feed pinion bearing shim (3).
4. Assemble and replace intermediate gear assembly. Refer to para 17-47.
5. Do frame 4 again.

GO TO FRAME 6

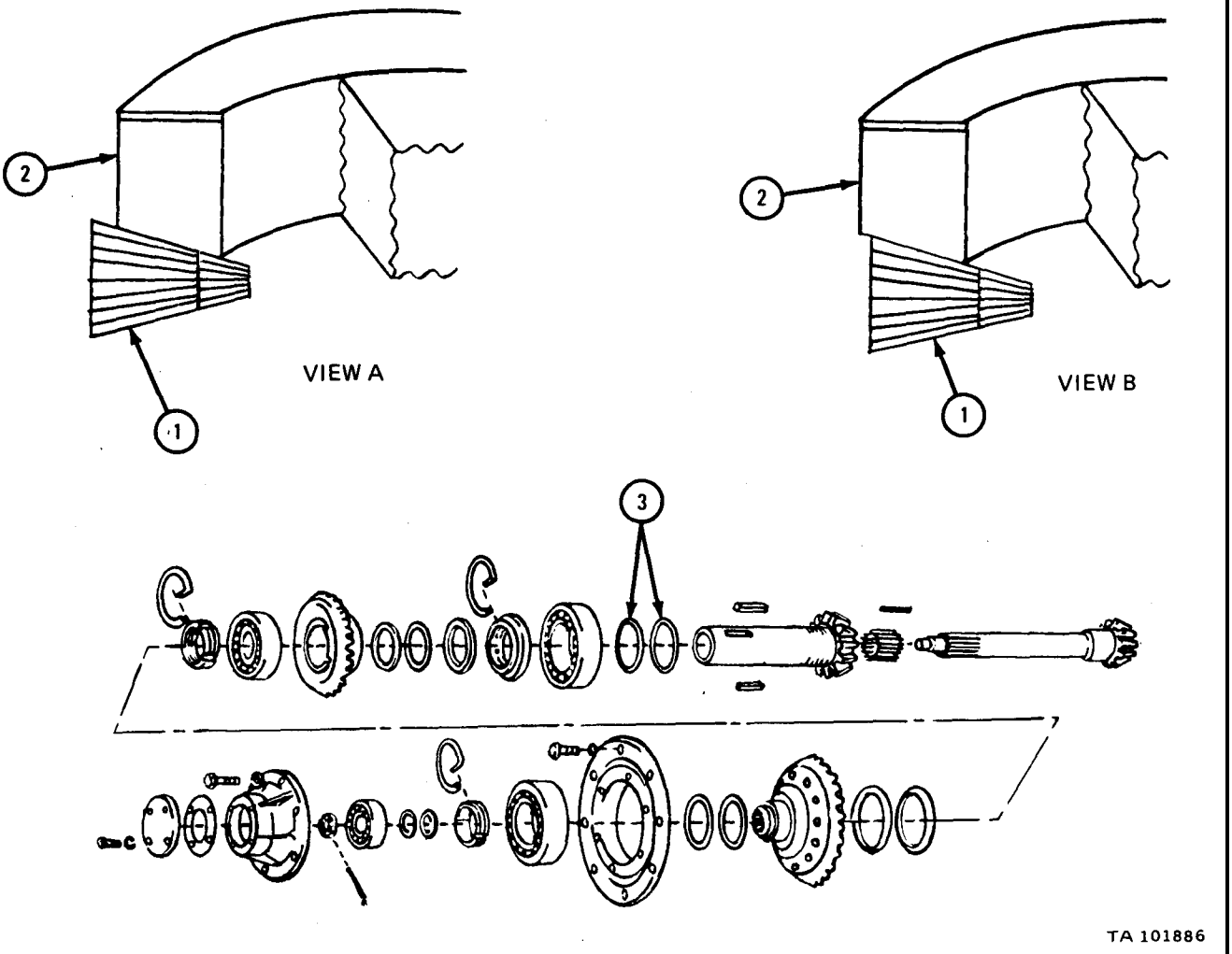

FRAME 6

1. Working through boring case inspection hole (1), mount dial indicator on housing and set stem against side of rack drive gear tooth (2) as shown.

NOTE

When measuring backlash, make sure second reduction drive pinion (3) does not turn. If pinion turns, backlash readings will be wrong.

2. Turn rack drive gear (4) away from dial indicator until rack drive gear tooth (5) touches pinion tooth (6) as shown in view A.
3. Set dial indicator to read 0.
4. Turn rack drive gear (4) toward dial indicator until rack drive gear tooth (7) reaches other side of pinion tooth (6) as shown in view B. Note reading on dial indicator.

IF READING ON DIAL INDICATOR IS NOT BETWEEN .008 TO .030 INCH, GO TO FRAME 7.
IF READING ON DIAL INDICATOR IS BETWEEN .008 TO .030 INCH, GO TO FRAME 8

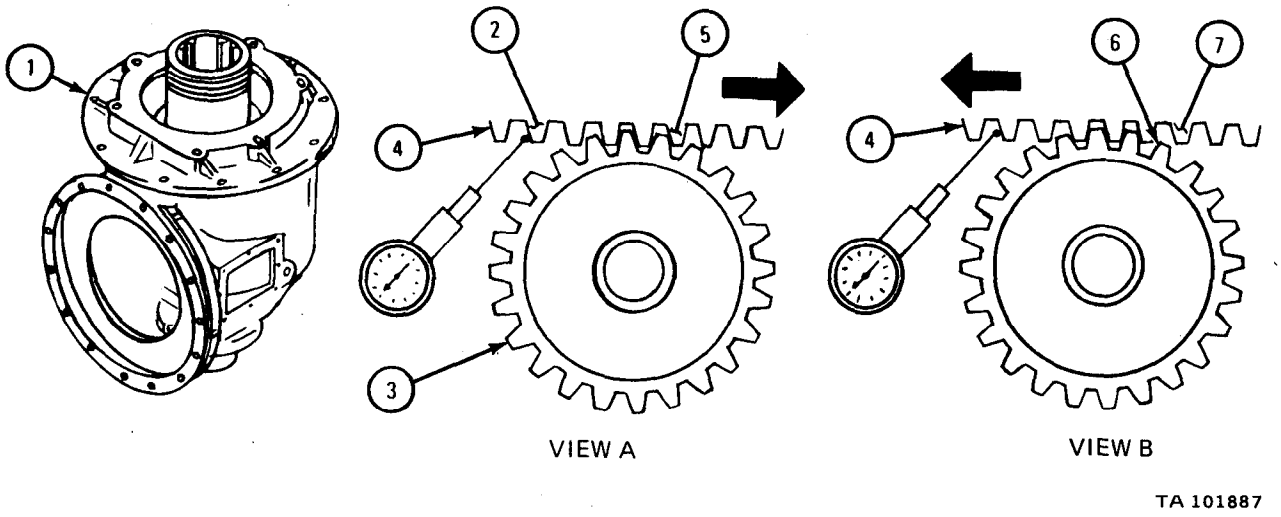

FRAME 7

1. Remove and disassemble boring case gear assembly. Refer to para 17-46b and 17-46c.
2. If reading in step 4, frame 6 is less than .005 inch, add .008-inch thickness to rack drive gear shim seal (1).
3. If reading in step 4, frame 6 is more than .030 inch, take off .020-inch thickness from rack drive gear shim set (1).
4. Assemble and replace boring case gear assembly. Refer to para 17-46g and 17-46h.
5. Do frame 4 again.

GO TO FRAME 8

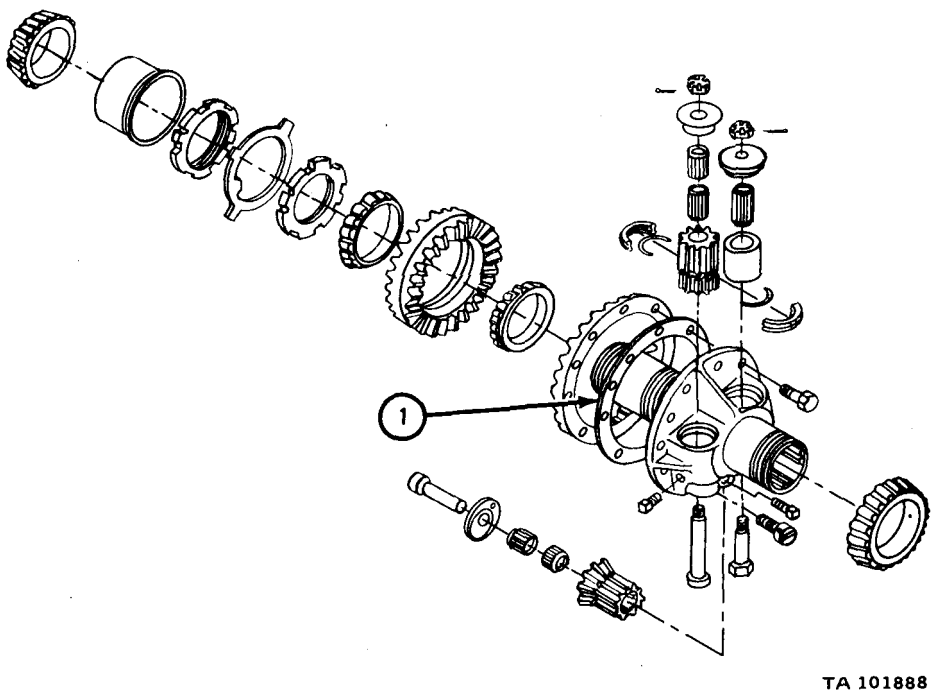

FRAME 8

1. Working through inspection hole (1), check that front edge of intermediate case second reduction feed pinion (2) is alined with front edge of rack feed idler gear (3) as shown.
2. If gears are not alined, note position of gears.

IF GEARS ARE NOT ALINED, GO TO FRAME 9.
IF GEARS ARE ALINED, GO TO FRAME 10

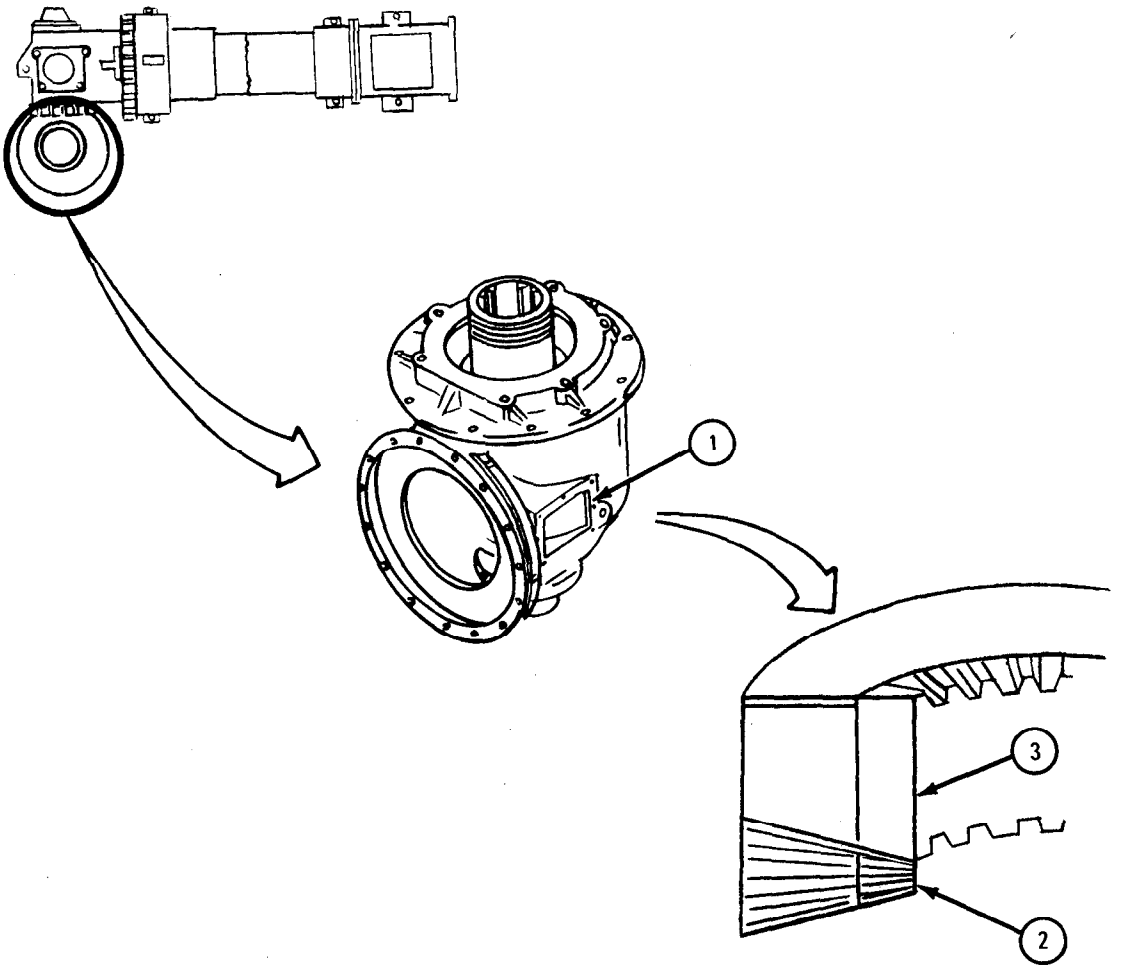

TA 105204

FRAME 9

1. If intermediate case second reduction feed pinion (1) and boring case rack feed idler gear (2) are alined as noted in frame 8 and shown in view A, add one feed pinion bearing shim (3).
2. If intermediate case second reduction feed pinion (1) and boring case rack feed idler gear (2) are alined as noted in frame 8 and shown in view B, take off one feed pinion bearing shim (3).

GO TO FRAME 10

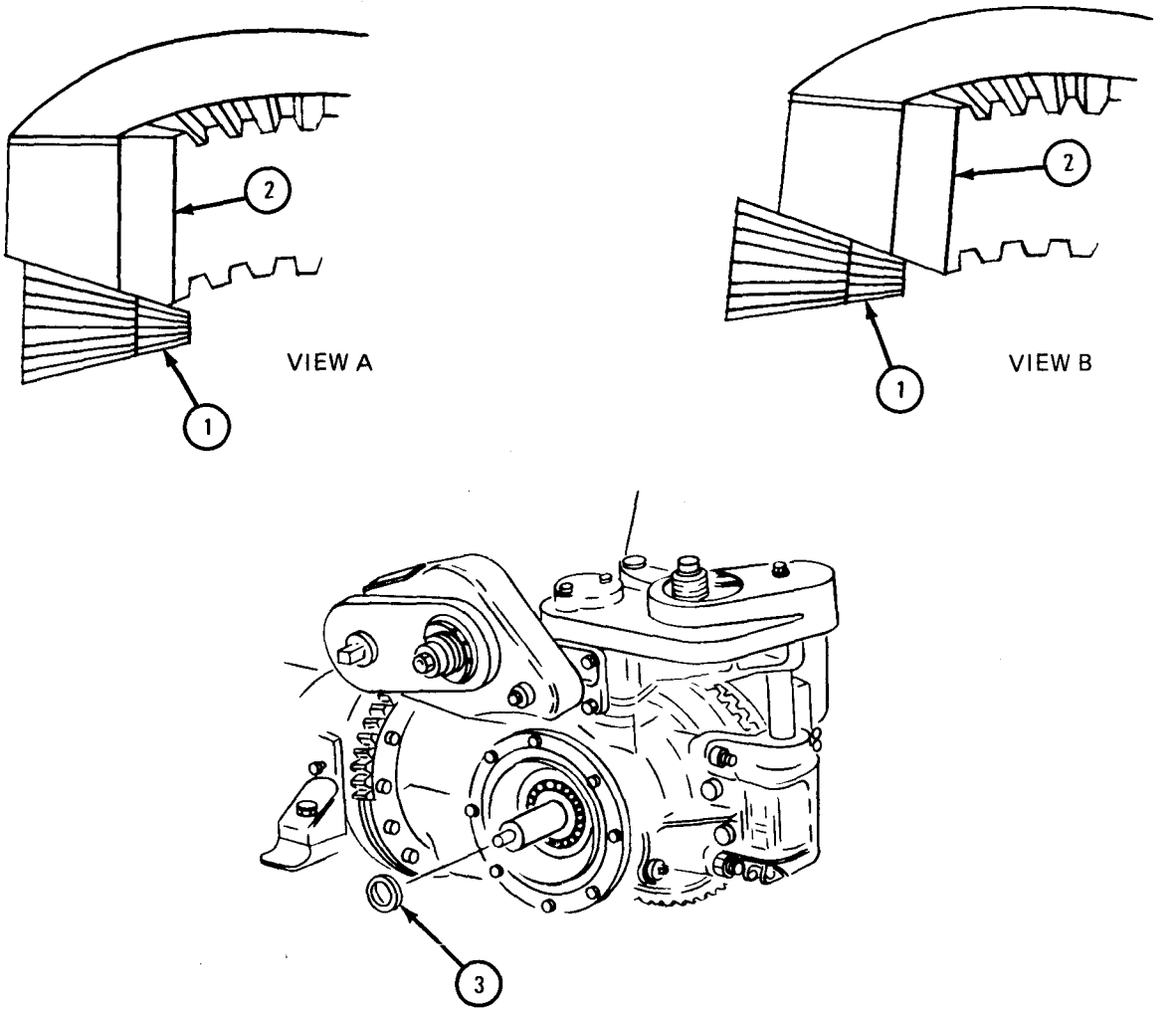

TA 101882

FRAME 10

1. Working through boring case inspection hole (1), mount dial indicator on housing and set stem against side of rack feed idler gear tooth (2) as shown.

NOTE

When measuring backlash, make sure second reduction feed pinion (3) does not turn. If pinion turns, backlash readings will be wrong.

2. Turn idler gear (4) away from dial indicator until idler gear tooth (5) touches pinion tooth (6) as shown in view A.
3. Set dial indicator to read 0.
4. Turn idler gear (4) toward dial indicator until idler gear tooth (7) touches other side of pinion tooth (6) as shown in view B. Note reading on dial indicator.

IF READING ON DIAL INDICATOR IS NOT BETWEEN .011 INCH TO .034 INCH, GO TO FRAME 11.
IF READING ON DIAL INDICATOR IS BETWEEN .011 INCH to .034 INCH, GO TO FRAME 12

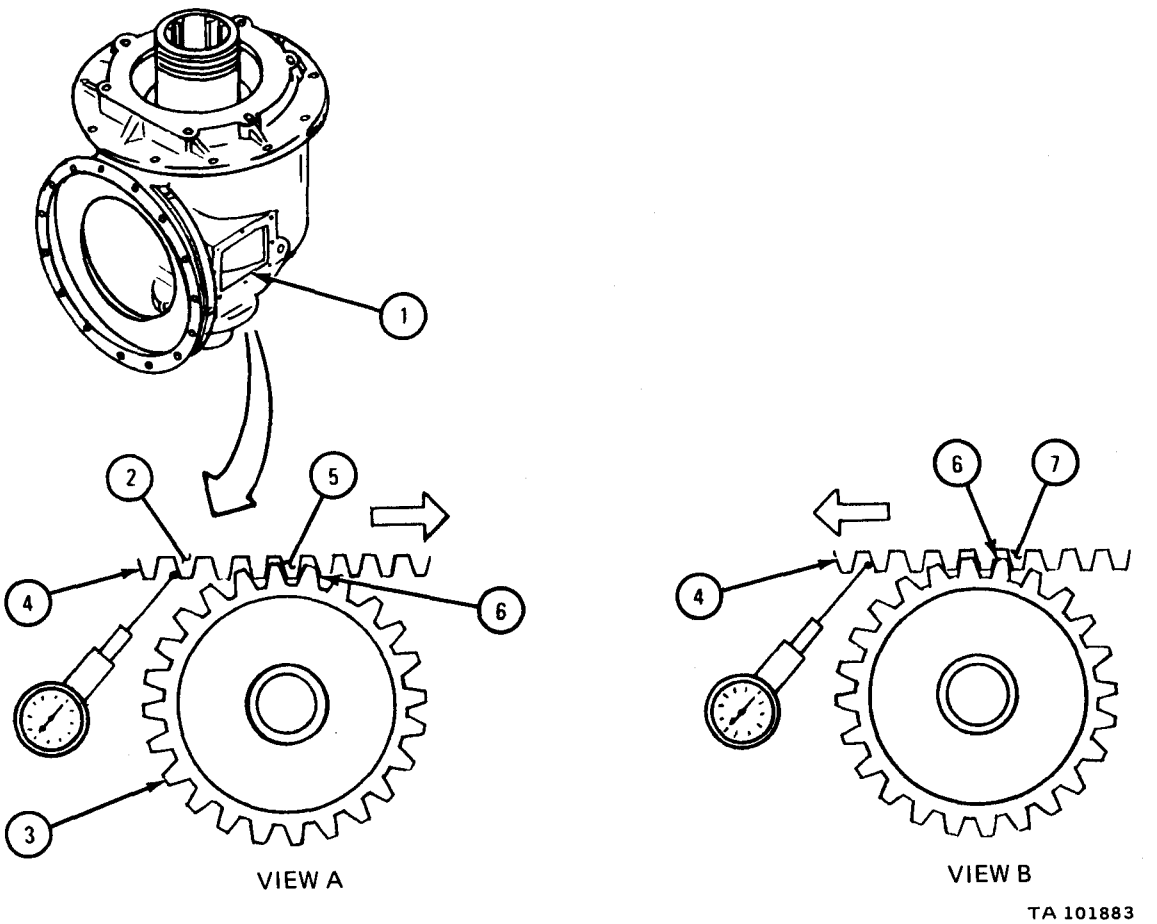

FRAME 11

1. Remove and disassemble boring case gear assembly. Refer to para 17-46b and 17-46c.
2. If reading in step 4, frame 10 is less than .011 inch, do the following:
   a. Add .011-inch thickness to lower rack carrier bearing shim set (1).
   b. Take out .011-inch thickness from upper rack carrier bearing shim set (2).
   c. Add .011-inch thickness to rack drive gear shim set (3).
3. If reading in step 4, frame 10 is more than .034 inch, do the following:
   a. Take out .020-inch thickness from lower rack carrier bearing shim set (2),
   b. Add .020-inch thickness to upper rack carrier bearing shim set (2).
4. Assemble and replace boring case gear assembly. Refer to para 17-46g and 17-46h.
5. Do frame 4 again.

GO TO FRAME 12

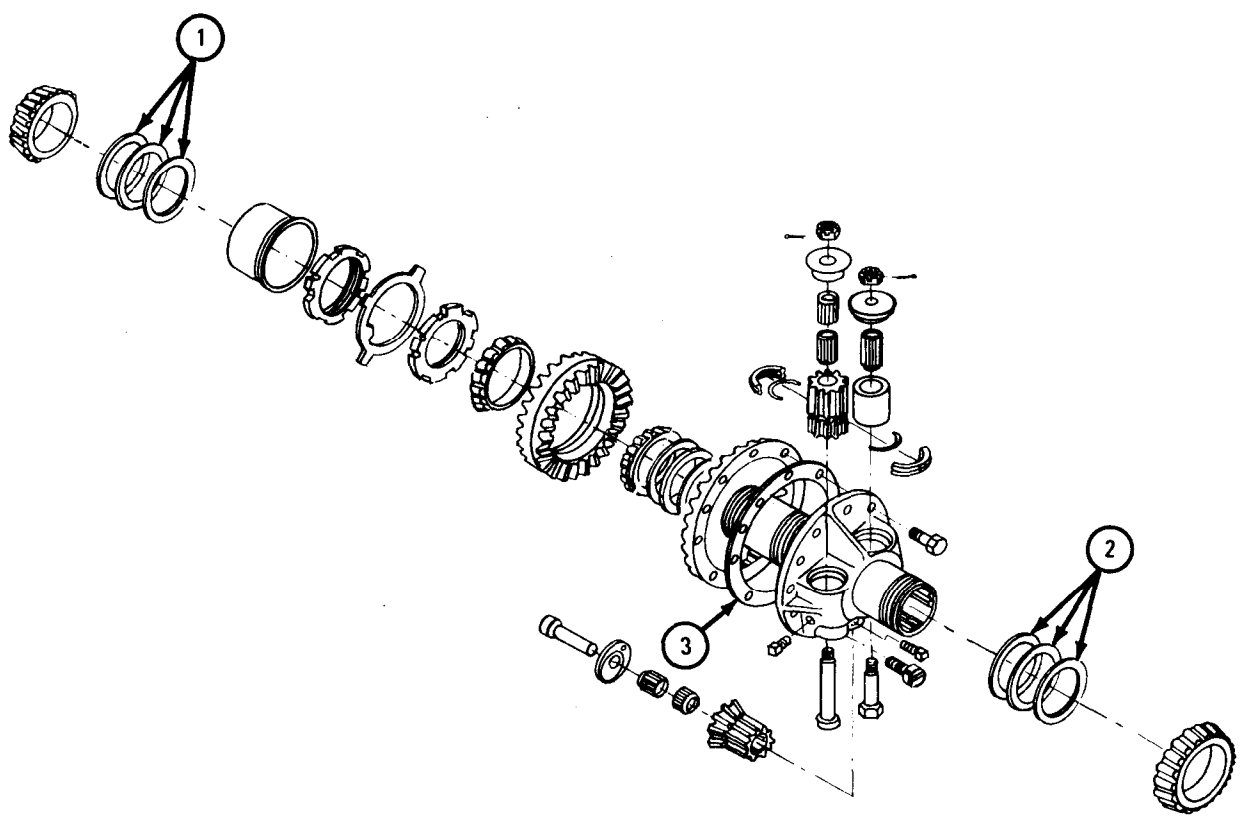

FRAME 12

Soldier A 1. Put gasket (1) and inspection hole cover (2) in place and aline screw holes. Put in eight machine bolts (3) and lockwashers (4).

2. Take out level mounting assembly (5) and lockwasher (6).

3. Take out nine capscrews (7) and lockwashers (8).

Soldiers A and B 4. Take off boring case cover (9).

GO TO FRAME 13

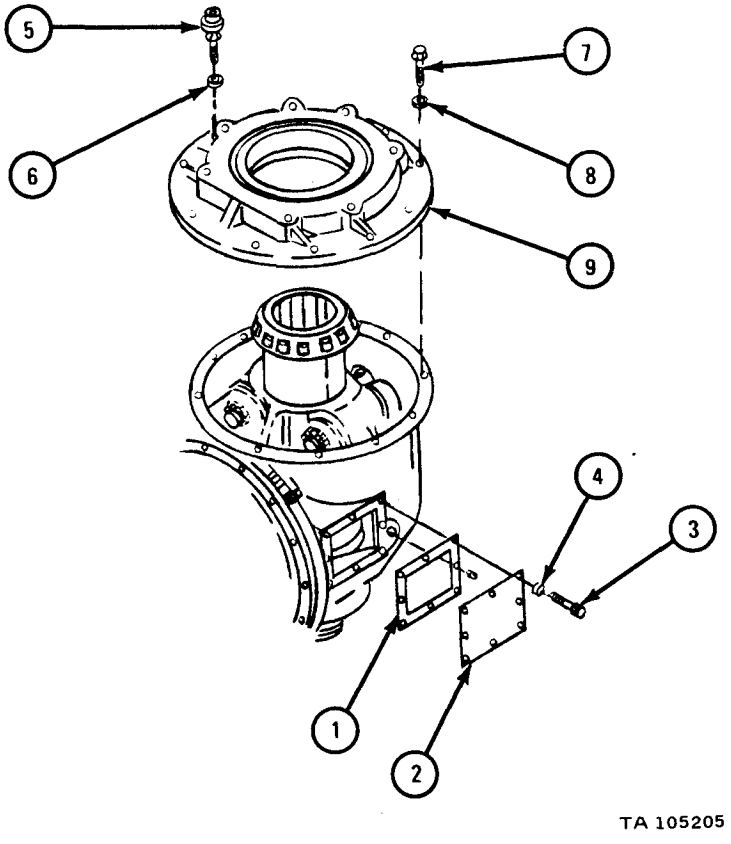

FRAME 13

Soldier A 1. Put two locking wires (1) through nine bolts (2) and three machine screws (3).

Soldiers A and B 2. Put on boring case cover (4) and aline screw holes.

Soldier A 3. Put in nine cap screws (5) and lockwashers (6).

4. Put in level mounting assembly (7) and lockwasher (8).

GO TO FRAME 14

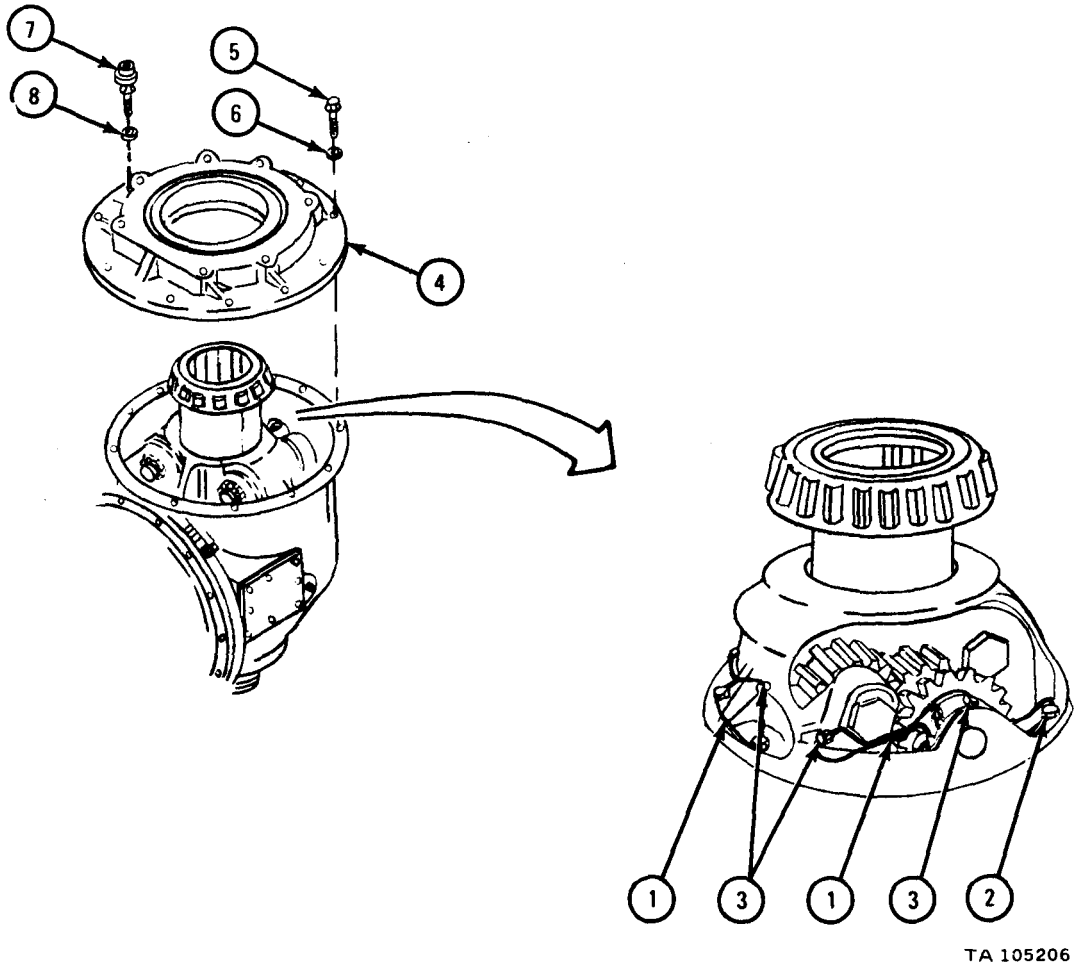

FRAME 14

Soldier A 1. Use ratchet wrench to turn horizontal leveling worm assembly until boring gear case (1) is horizontal. Refer to Operation of Earth Boring Machine and Pole setter Trucks, TM 9-2320-209-10.

2. Coat rack bar (2) with grease.

Soldiers A and B 3. Put chain hoist (3) on rack bar (2) as shown.

WARNING

When replacing rack bar (2), be sure it is balanced on chain hoist or it may fall causing damage to equipment and injury to personnel.

NOTE

Be sure rack bar (2) teeth are facing to the right as shown.

Soldier A 4. Feed rack bar (2) in lower end of boring gear case (1) until it engages.

GO TO FRAME 15

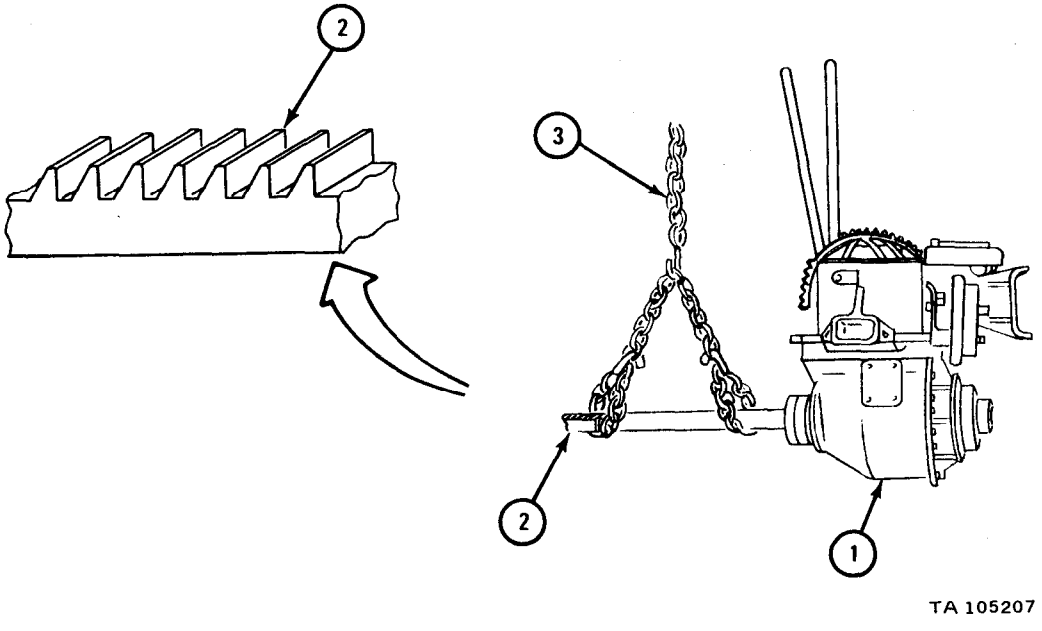

FRAME 15

Soldier A 1. Balance rack bar (1) when soldier B feeds it into boring gear case (2).

Soldier B 2. Using boring machine, feed rack bar (1) into boring gear case (2) until approximately two feet are out top of rack carrier tube (3). Refer to Operation of Earth Boring Machine and Polesetter Trucks, TM 9-2320-209-10.

NOTE

Be sure the thinnest plate (4) goes on the shortest stud (5).

3. Put four plates (4) in plate retainer (6).

NOTE

Be sure the thinnest plate (4) is against rack bar (1) teeth.

4. Slide plate retainer (6) with four plates (4) over rack bar (1) and put in plate.

NOTE

Spacers (7) must be the same thickness as noted in removal.

5. Put on spacers (7) and rack carrier nut (8).

6. Put in two capscrews (9).

GO TO FRAME 16

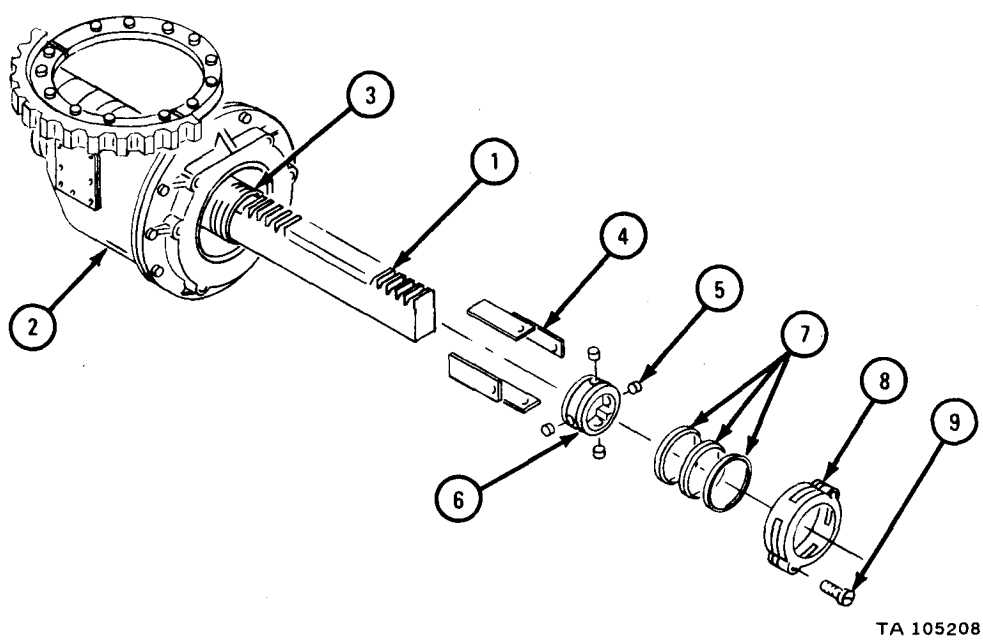

FRAME 16

NOTE

Be sure the thinnest plate (1) goes on the shortest pin (2).

1. Put four plates (1) on four pins (2) in plate retainer (3).

NOTE

Be sure the thinnest plate (1) is against rack bar (4) teeth.

2. Slide plate retainer (3) with four plates (1) over rack bar (4) and put in place.
3. Put on rack carrier nut (5).
4. Put in two capscrews (6).
5. Put back derrick tube base (see para 17-56e, Replacement, frame 1).
6. Put back rack bar guide (see para 17-56e, Replacement, frame 2).

NOTE

Follow-on Maintenance Action Required:

1. Replace lubricant. Refer to LO 9-2320-209-12/1.
2. Replace integral derrick and snatch sheave assembly. Refer to para 17-56.
3. Test boring machine. Refer to TM 9-2320-209-10.

END OF TASK

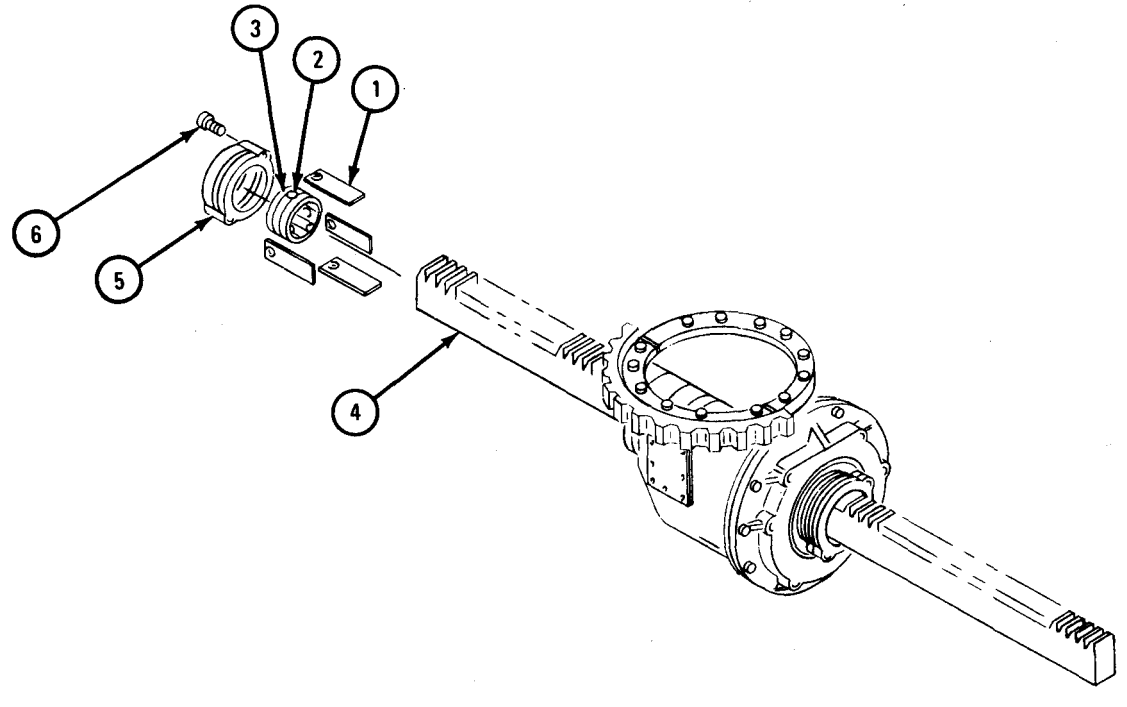

17-47. INTERMEDIATE CASE AND GEAR ASSEMBLY REMOVAL, REPAIR, REPLACEMENT AND ADJUSTMENT (TRUCK M764).

TOOLS: Spanner wrench, pn CT685

SUPPLIES: Cap cover gasket
Second reduction feed pinion bearing shim set
First reduction drive and feed gear shim set
First reduction feed gear shim set
Second reduction drive pinion bearing shim set
Artillery and automotive grease (GAA), MIL-G-10924
Lubricating oil, ICE, OE/HDO 10, MIL-L-2104
Rubber bands (2)
Solvent, dry cleaning, type II (SD-2), Fed. Spec P-D-680
Compressed air source, 30 psi max

PERSONNEL: Two

EQUIPMENT CONDITION: Truck parked, engine off, handbrake set.

a. Preliminary Procedures.

(1) Drain lubricant from intermediate gear case. Refer to LO 9-2320-209-12/1.

(2) Remove integral derrick assembly and auger rack bar. Refer to para 17-56.

(3) Remove boring case and gear assembly. Refer to para 17-46.

(4) Remove horizontal leveling worm. Refer to para 17-49.

(5) Remove power leveler. Refer to para 17-53.

(6) Remove vertical leveling worm. Refer to para 17-50.

b. Removal.

FRAME 1

Soldier A 1.	Take out eight capscrews (1) and lockwashers (2).
2.	Put lifting fixture (3) on chain hoist (4) as shown.
3.	Put lifting fixture (3) into place and aline screw holes.
4.	Put in and tighten two 1/2-20 x 5-inch capscrews (5) until bearing retainer flange (6) comes free from intermediate case (7).
Soldiers A and B 5.	Take gear assembly (8) out of intermediate case (7) and lower it to floor.
Soldier A 6.	Take off chain hoist (4), two 1/2-20 x 5-inch capscrews (5), and lifting fixture (3).

GO TO FRAME

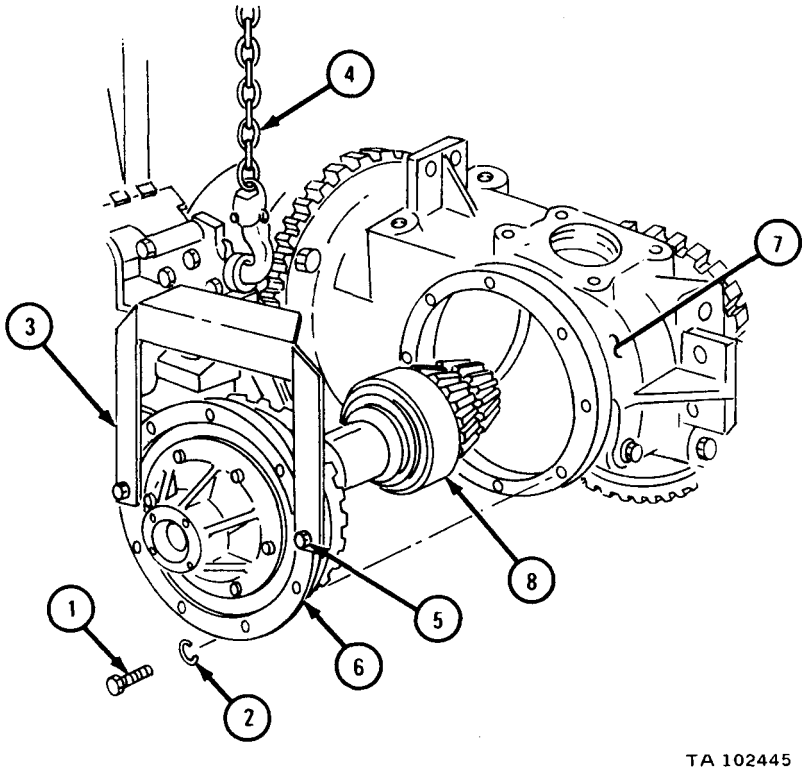

FRAME 2

Soldier A 1. Put chain hoist (1) on intermediate case (2) as shown.

2. Take out 15 capscrews (3), nuts (4), and lockwashers (5).

3. Take off leveling worm wheel gear (6), retaining lock plate (7), and two felts (8).

Soldiers A and B 4. Take off intermediate case (2) and lower it to floor.

Soldier A 5. Take off chain hoist (1).

END OF TASK

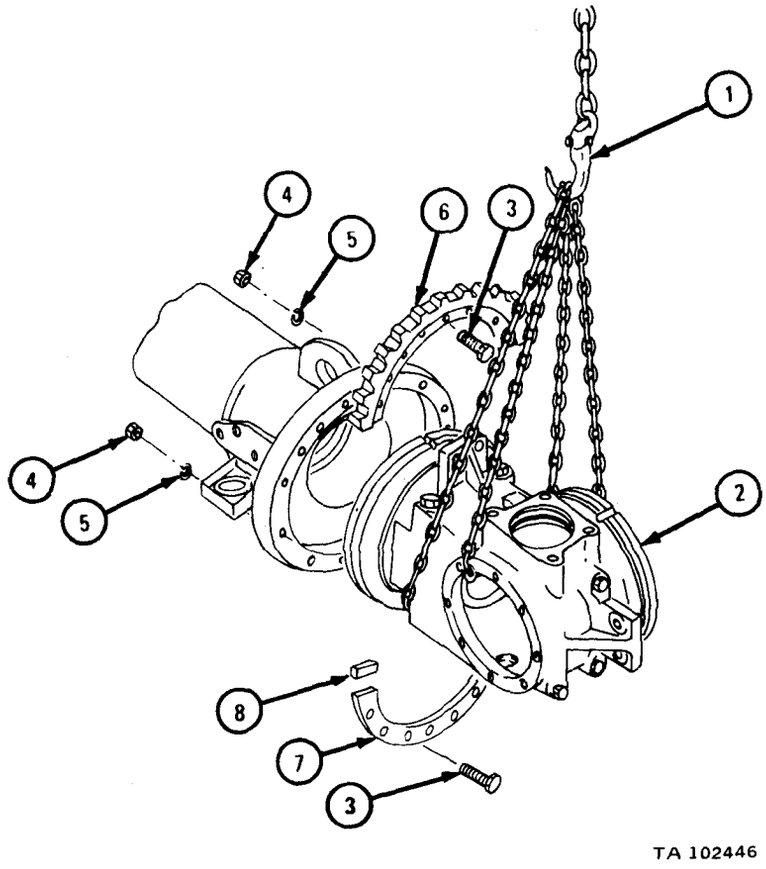

c. Disassembly.

FRAME 1

1. Take out four bolts (1) and lockwashers (2).
2. Take off access cover (3) and gasket (4). Throw away gasket.
3. Take out six capscrews (5) and lockwashers (6).

NOTE

If cap (7) will not come off easily, put screwdriver between cap and bearing retainer flange (8) and pry off cap.

4. Take off cap (7).

GO TO FRAME 2

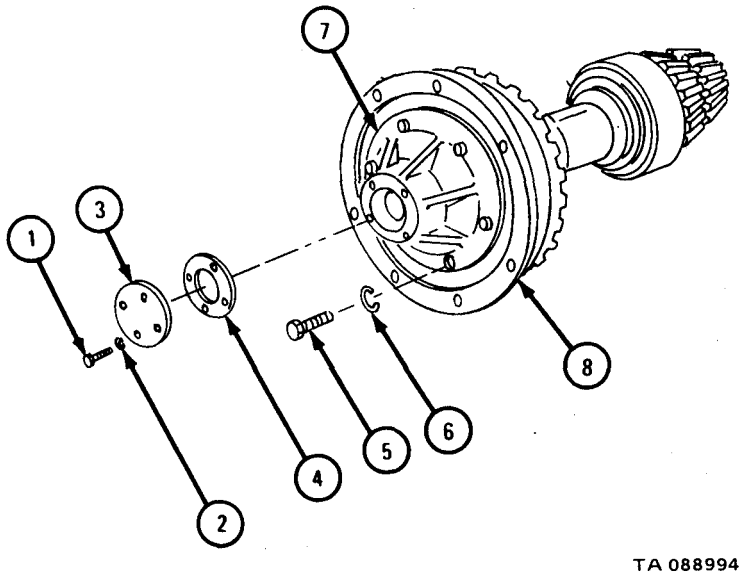

FRAME 2

1. Take out and throw away cotter pin (1).
2. Take off slotted nut (2).
3. Take bearing (3) off shaft (4). Refer to Part 1, para 10-8.
4. Take off shims (5). Make note of thickness of shims. Throw away shims.

GO TO FRAME 3

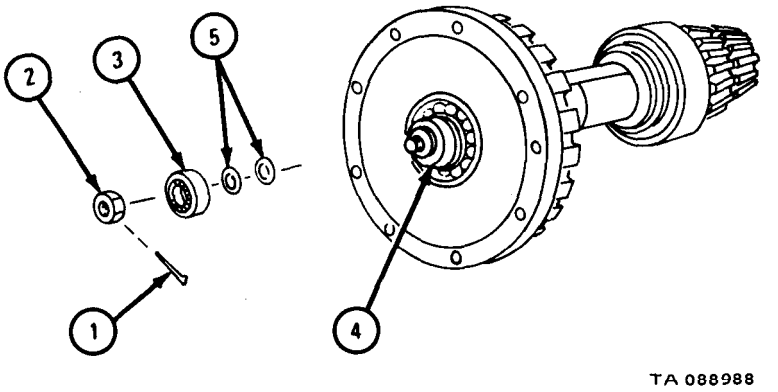

FRAME 3

CAUTION

Bearing rollers (1) are not held in place. When pulling out feed pinion shaft (2), be careful not to drop or lose any bearing rollers.

1. Pull out feed pinion shaft (2) until 24 bearing rollers (1) can be seen.
2. Take out 24 bearing rollers (1).
3. Pull out feed pinion shaft (2).

GO TO FRAME 4

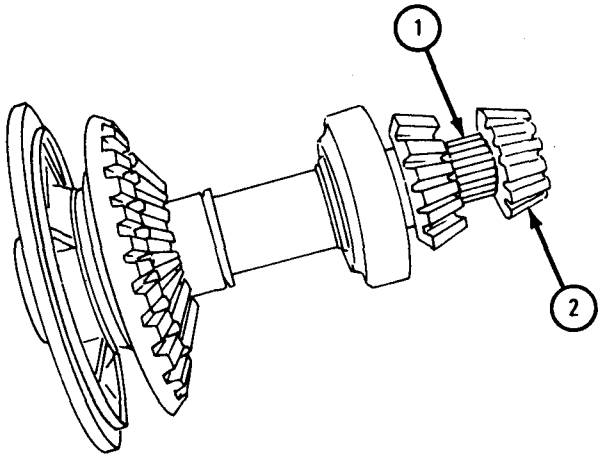

TA 088989

FRAME 4

1. Take off retainer ring (1).
2. Using spanner wrench, take off adjusting nut (2).
3. Take off bearing retainer flange (3) with ball bearing (4).
4. Take off shims (5). Make note of thickness of shims. Throw away shims.
5. Tap off feed gear and hub assembly (6) with shims (7).
6. Take shims (7) out of feed gear hub assembly (6). Make note of thickness of shims. Throw away shims.

GO TO FRAME 5

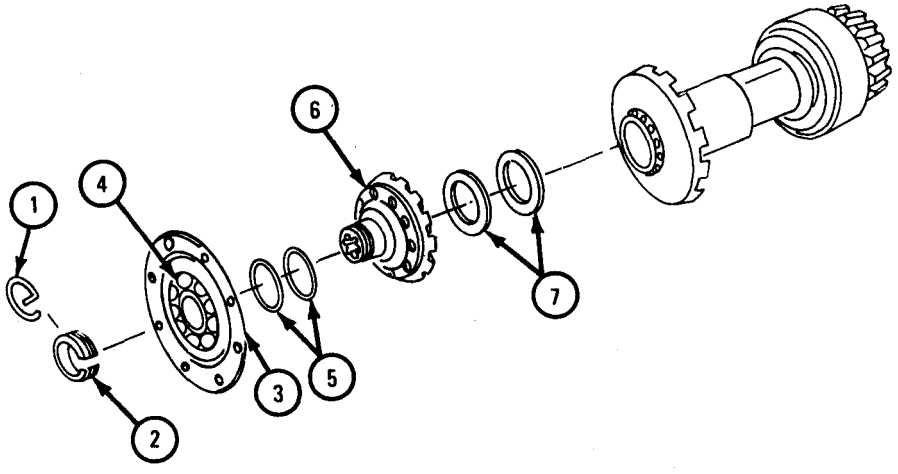

TA 089012

FRAME 5

1. Put feed gear and hub assembly (1) on arbor press as shown.

NOTE

When pressing out ball bearing (2), hold hand under gear and hub assembly (1) to keep ball bearing from falling.

2. Press out ball bearing (2).

GO TO FRAME 6

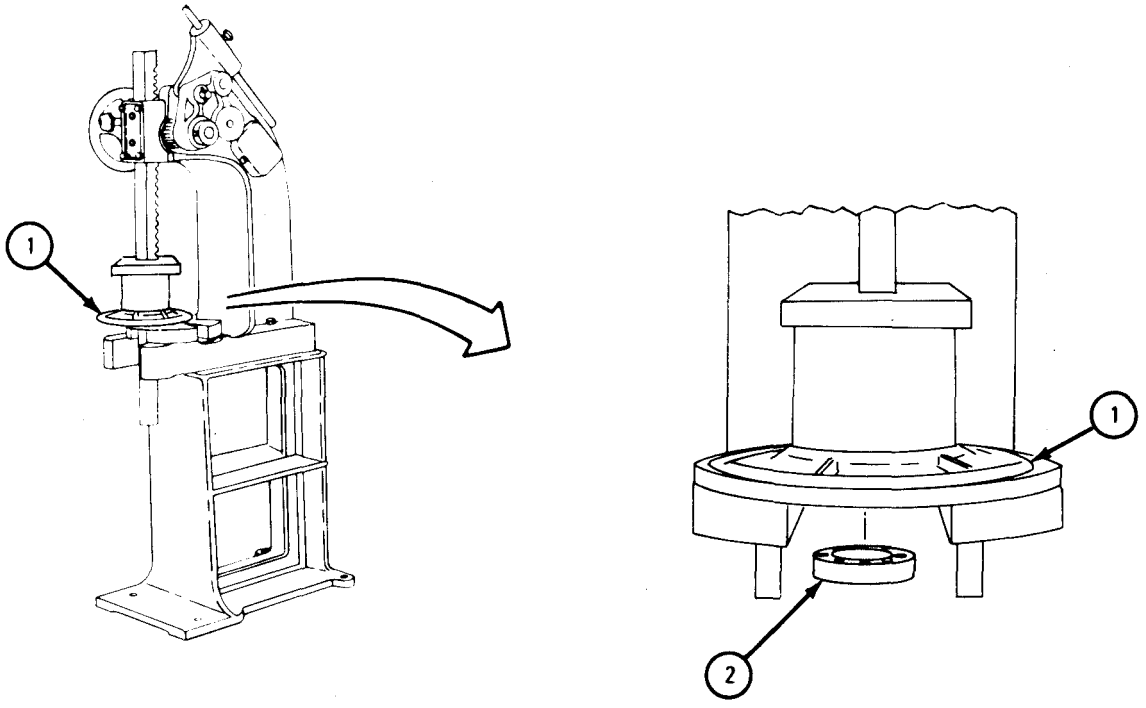

TA 089013

FRAME 6

1. Take off retaining ring (1).
2. Using spanner wrench, take off adjusting nut (2).
3. Take off ball bearing (3) and first reduction gear (4).
4. Take out two machine keys (5).

GO TO FRAME 7

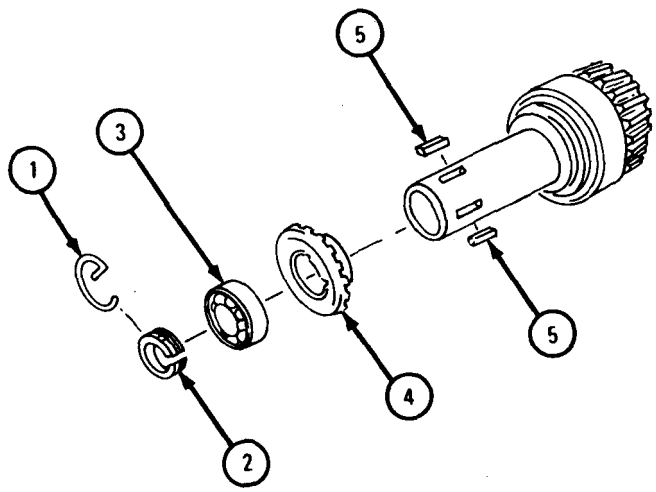

TA 101053

FRAME 7

1. Take off shims (1). Note and record thickness of shims for use. Throw away shims.
2. Take off spacer (2).
3. Take off retaining ring (3), adjusting nut (4), and ball bearing (5).
4. Take off shims (6). Note and record thickness of shims for use. Throw away shims.

END OF TASK

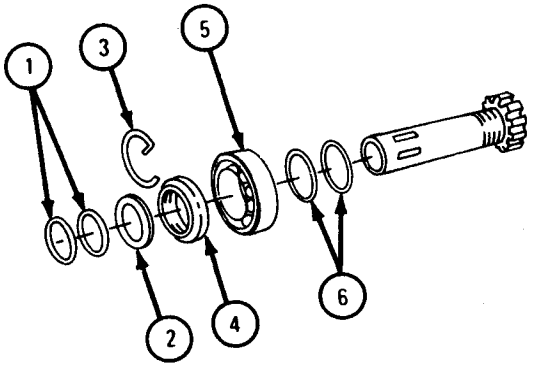

TA 101085

WARNING

Dry cleaning solvent is flammable. Do not use near an open flame. Keep a fire extinguisher nearby when solvent is used. Use only in well-ventilated places. Failure to do this may result in injury to personnel and damage to equipment.

Eye shields must be worn when using compressed air. Eye injury can occur if eye shields are not used.

d. Cleaning. Clean all parts with dry cleaning solvent. Dry with compressed air.

e. Inspection.

FRAME 1

1. Check that access cover (1), cap (2), bearing retainer flange (3), and gear housing (4) are not scratched, chipped, cracked or have small holes.
2. Check that feed gear and hub assembly (5) and first reduction gear (6) are not burred, nicked, cracked or have damaged gear teeth.
3. Check that two pinion shafts (7) are not chipped, scratched, burred or have damaged gear teeth.
4. Check five bearings (8). Refer to Part 1, para 10-8.
5. Check that all thread parts are not stripped or crossthreaded.

END OF TASK

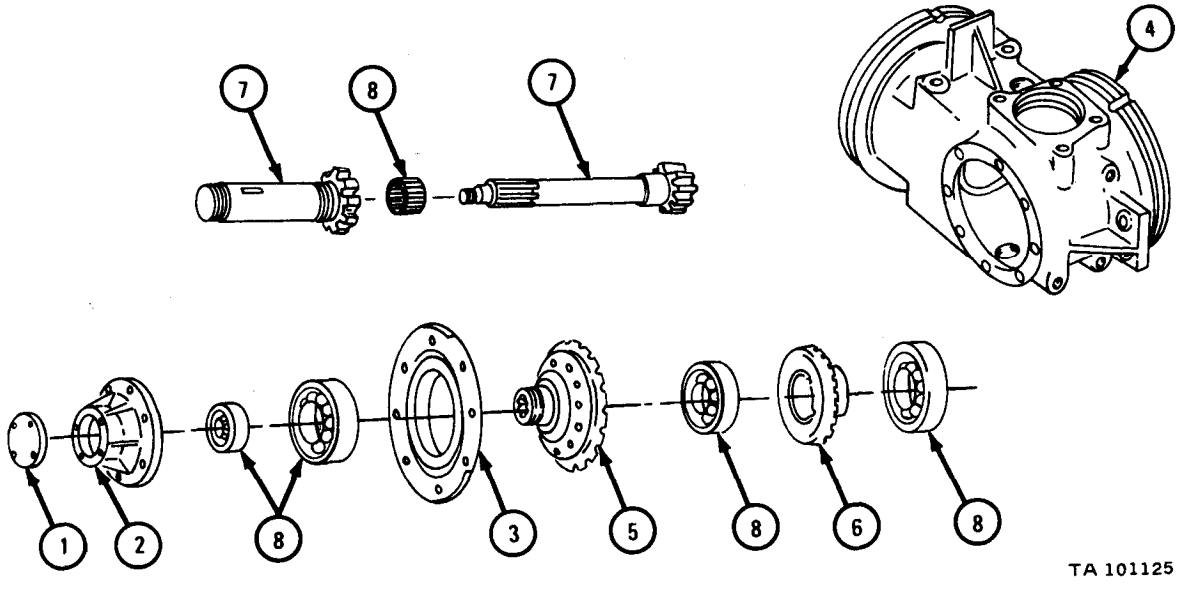

f. Repair.

(1) Smooth out any chips, burrs or scratches with a honing stone.

(2) Weld any cracks or small holes. Refer to TM 9-237.

g. Assembly.

FRAME 1

NOTE

Shims (1) must be same thickness as noted.

1. Put shims (1) on drive pinion shaft (2).

NOTE

When replacing ball bearing (3), bearing shield must face drive pinion (4).

2. Pack ball bearing (3) with grease. Put on ball bearing.

3. Put on adjusting nut (5) and retaining ring (6).

GO TO FRAME 2

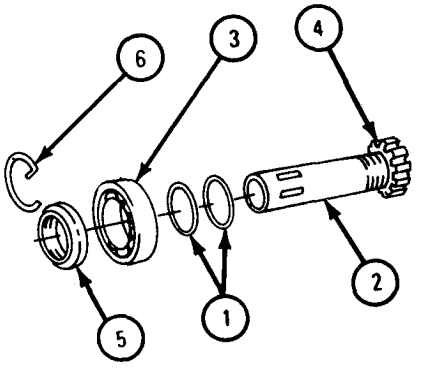

TA 101126

FRAME 2

1. Put on spacer (1).

NOTE

Shims (2) must be the same thickness as noted.

2. Put on shims (2).
3. Put in two machine keys (3).

GO TO FRAME 3

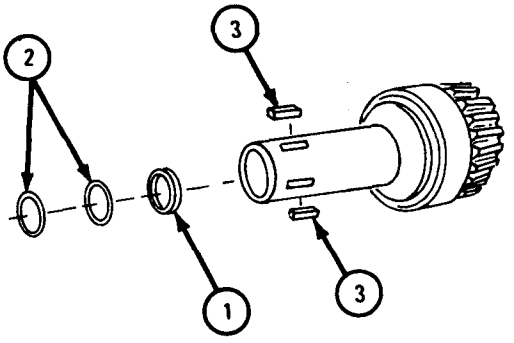

TA 101133

FRAME 3

1. Put drive pinion shaft (1) on arbor press as shown.
2. Aline keyways in first reduction gear (2) with two machine keys (3).
3. Press on first reduction gear (2).

GO TO FRAME 4

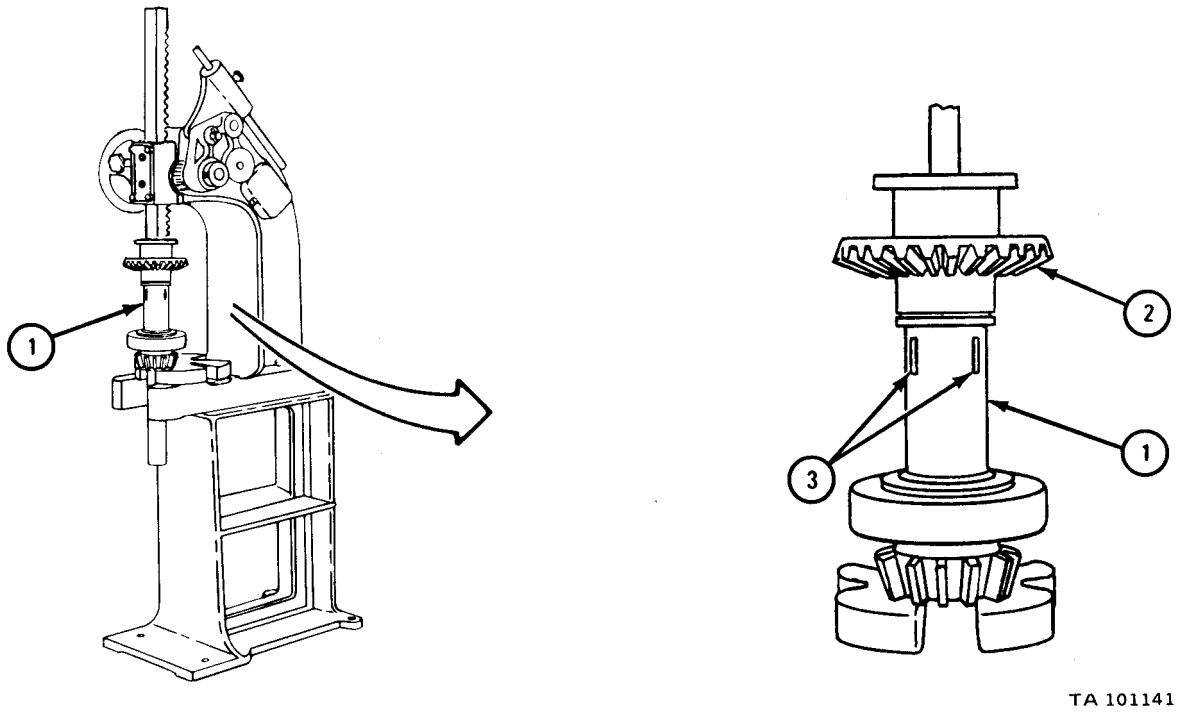

FRAME 4

1. Pack ball bearing (1) with grease. Put on ball bearing.
2. Using spanner wrench, put on adjusting nut (2).
3. Put on retaining ring (3).

GO TO FRAME 5

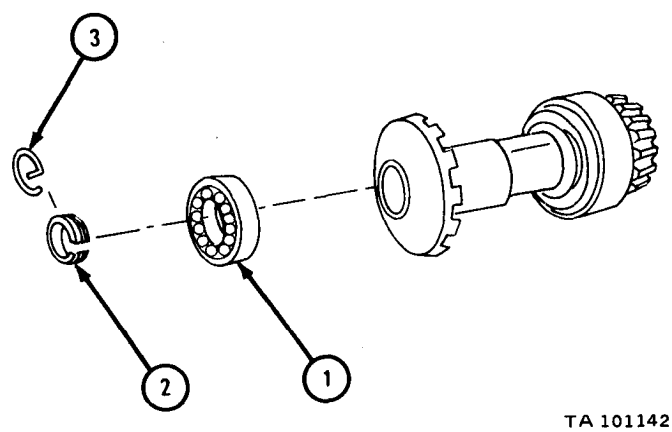

FRAME 5

1. Slide feed pinion shaft (1) part way into drive pinion shaft (2) as shown.
2. Put two rubber bands (3) on feed pinion shaft (1) as shown.
3. Coat 24 bearing rollers (4) with oil.
4. Put 24 bearing rollers (4) under two rubber bands (3) on feed pinion shaft (1).
5. Slide feed pinion shaft (1) into drive pinion shaft (2) until 24 bearing rollers (4) are held in place by drive pinion (5).
6. Take off two rubber bands (3).

GO TO FRAME 6

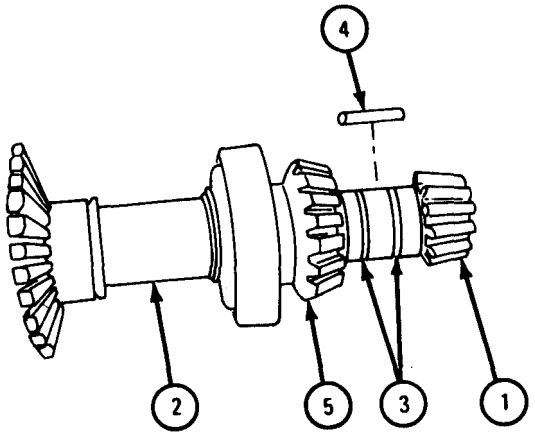

TA 085347

FRAME 6

NOTE

Shims (1 and 2) must be same thickness as noted.

1. Put shims (1) in feed gear and hub assembly (3).
2. Put shims (2) on feed gear and hub assembly shaft (4).
3. Put ball bearing (5) in bearing retainer flange (6).
4. Put bearing retainer flange (6) with ball bearing (5) on feed gear and hub assembly (3).
5. Using spanner wrench, put on adjusting nut (7).
6. Put on retainer ring (8).

END OF TASK

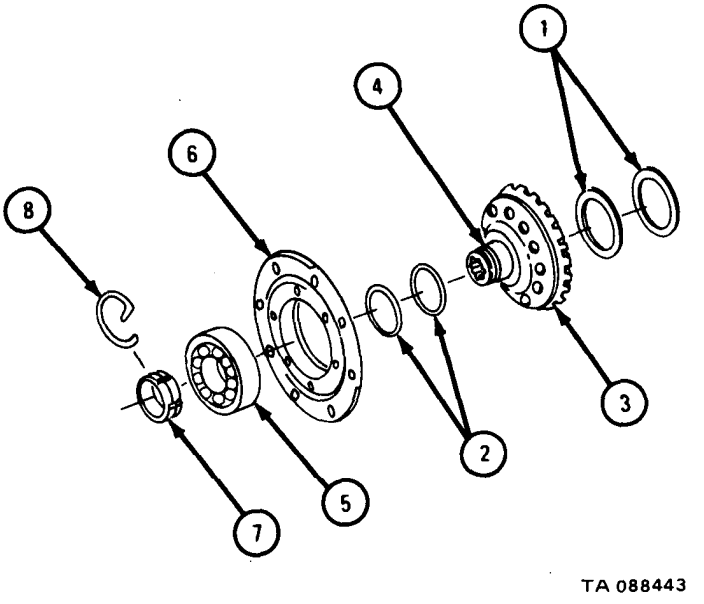

h. Replacement.

FRAME 1

Soldier A 1.	Put chain hoist (1) on intermediate case (2) as shown.
Soldiers A and B 2.	Using hoist, put intermediate case (2) into place and aline it with supporting tube (3).
Soldier A 3.	Put leveling worm wheel gear (4) into place and aline screw holes. Put in eight capscrews (5), lockwashers (6), and nuts (7).

GO TO FRAME 2

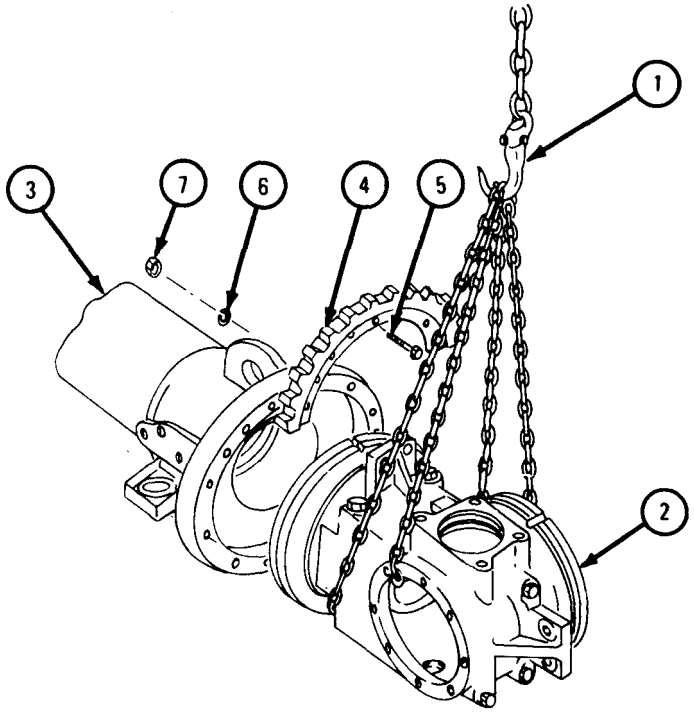

TA 102447

FRAME 2

Soldier A 1. Put two felts (1) and retaining lock plate (2) into place and aline screwholes.

Soldier B 2. Put in seven capscrews (3), lockwashers (4), and nuts (5).

3. Take off chain hoist (6).

GO TO FRAME 3

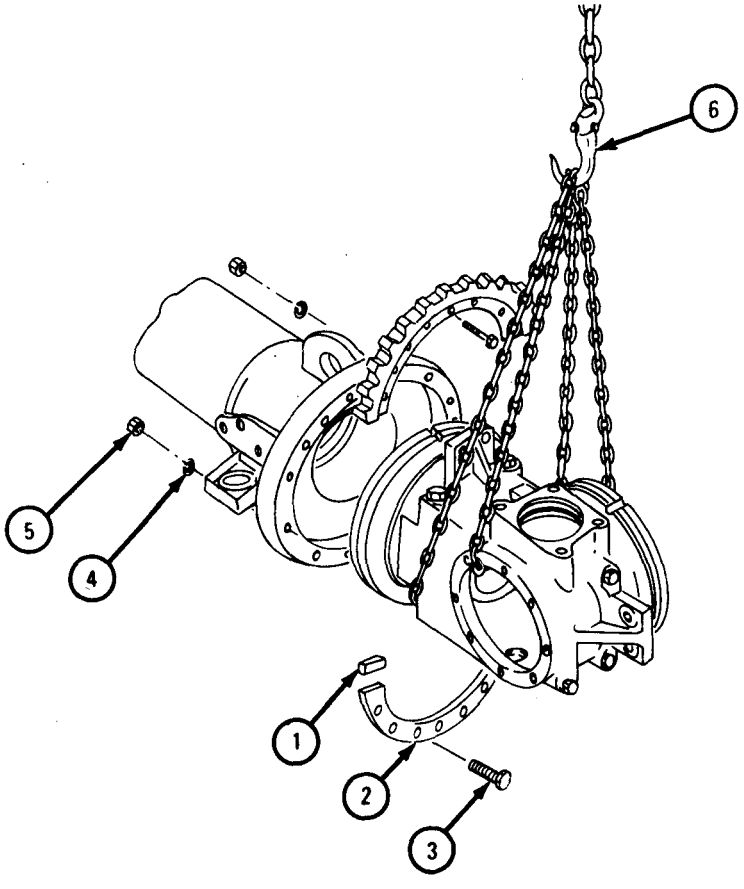

TA 102448

FRAME 3

Soldier A 1.	Put lifting fixture (1) into place and aline screw holes. Put in two 1/2-20 x 5 capscrews (2).
2.	Put on chain hoist (3) as shown.
Soldiers A and B 3.	Using hoist, put gear assembly (4) into place in intermediate housing (5).
Soldier A 4.	Put in two capscrews (6) and lockwashers (7).
5.	Take out two 1/2- 20 x 5-inch cap screws (2). Take off lifting fixture (1).
6.	Replace boring case and gear assembly. Refer to para 17-46.

END OF TASK

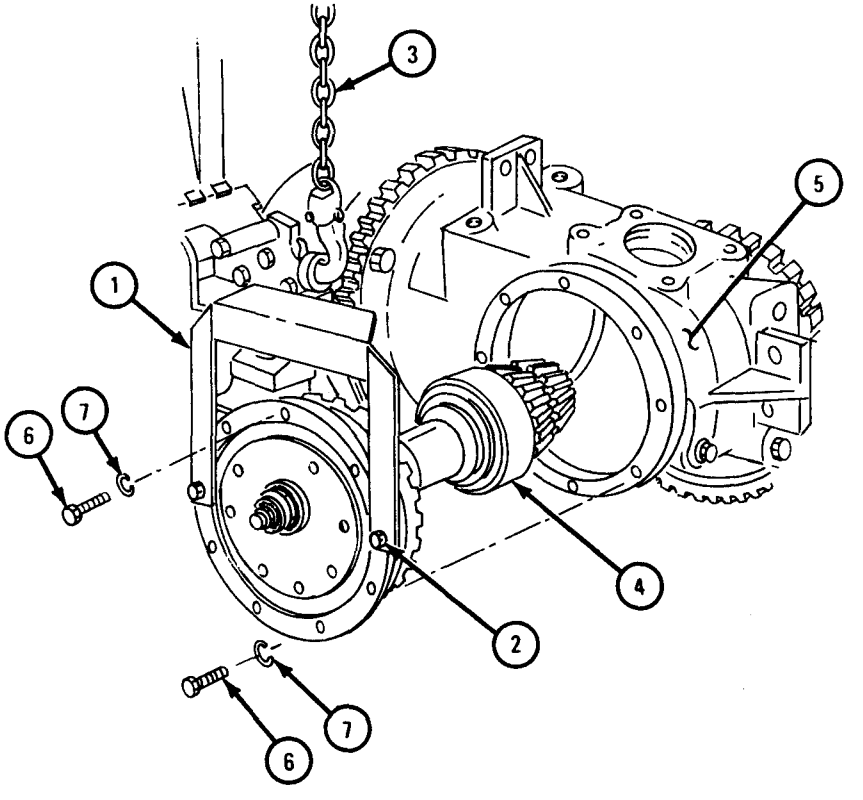

TA 102449

i. Adjustment

(1) First reduction drive gear.

FRAME 1

1. Working through shaft hole in power leveler mounting flange (1), check that front edge of intermediate case first reduction drive gear (2) is alined with front edge of drive clutch and brake first reduction drive pinion (3) as shown.

IF GEARS ARE NOT ALINED, GO TO FRAME 2.
IF GEARS ARE ALINED , GO TO FRAME 3

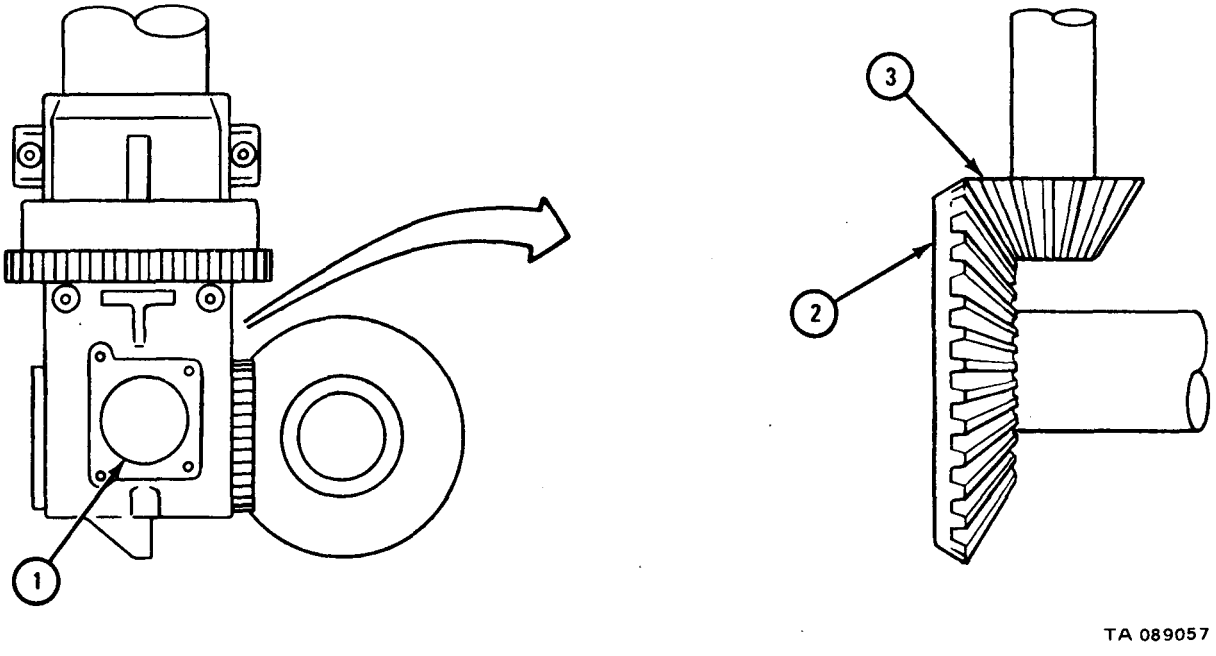

FRAME 2

1. Working at front of clutch case (1), take out four capscrews (2) and lockwashers (3).
2. Take off cover (4) and gasket (5).
3. If intermediate case first reduction drive gear (6) and drive clutch and brake first reduction drive pinion (7) are alined as shown in view A, add one shim (8).
4. If intermediate case first reduction drive gear (6) and drive clutch and brake first reduction drive pinion (7) are alined as shown in view B, take off one shim (8).
5. Put on gasket (5) and cover (4) and aline screw holes.
6. Put in four capscrews (2) and lockwashers (3).
7. Do frame 1 again.

GO TO FRAME 3

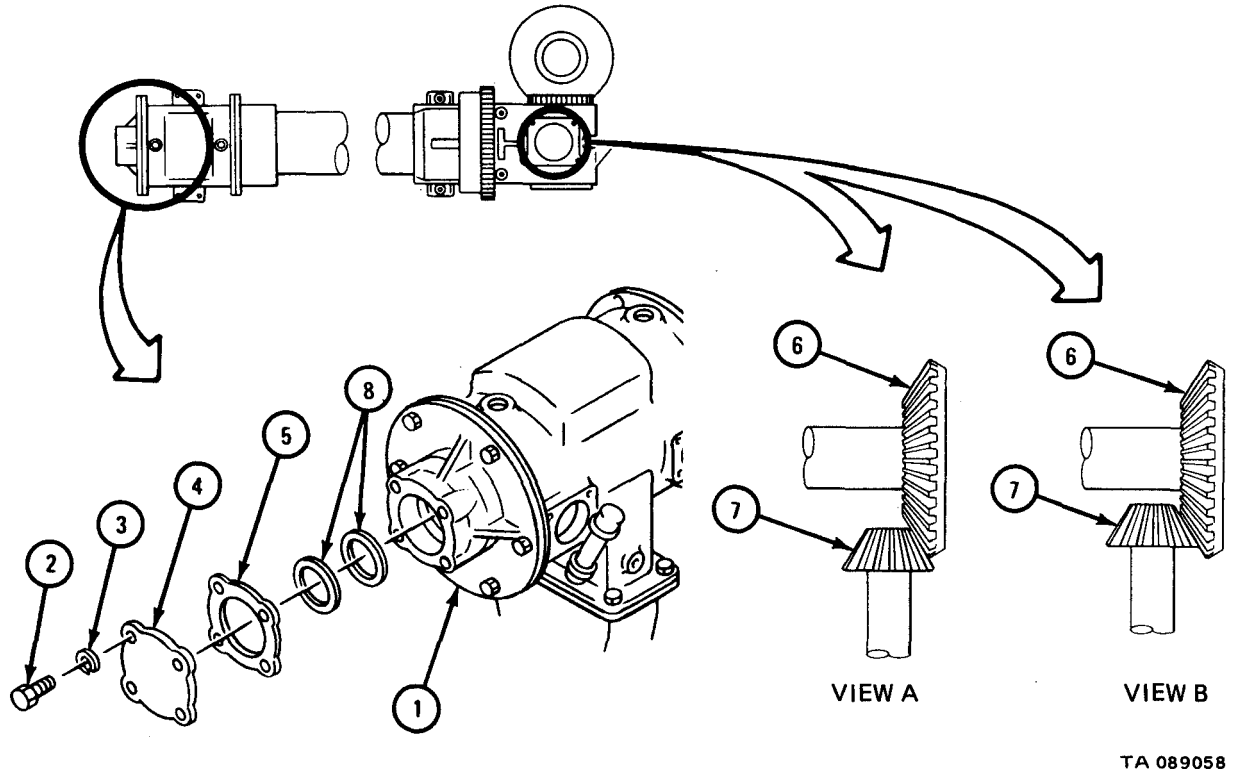

FRAME 3

1. Working through shaft hole in power leveler mounting flange (1), mount dial indicator on housing and set stem against side of reduction drive gear tooth (2) as shown.

NOTE

When measuring backlash, make sure that first reduction drive pinion (3) does not turn. If pinion turns, backlash readings will be wrong.

2. Turn drive gear (4) away from dial indicator until drive gear tooth (5) touches pinion tooth (6) as shown in view A.
3. Set dial indicator to read 0.
4. Turn drive gear (4) towards dial indicator until drive gear tooth (7) touches either side o-f pinion tooth (6) as shown in view B. Note reading on dial indicator.

IF READING ON DIAL INDICATOR IS NOT 0.006 TO 0.024 INCH, GO TO FRAME 4.
IF READING ON DIAL INDICATOR IS 0.006 TO 0.024 INCH, END OF TASK

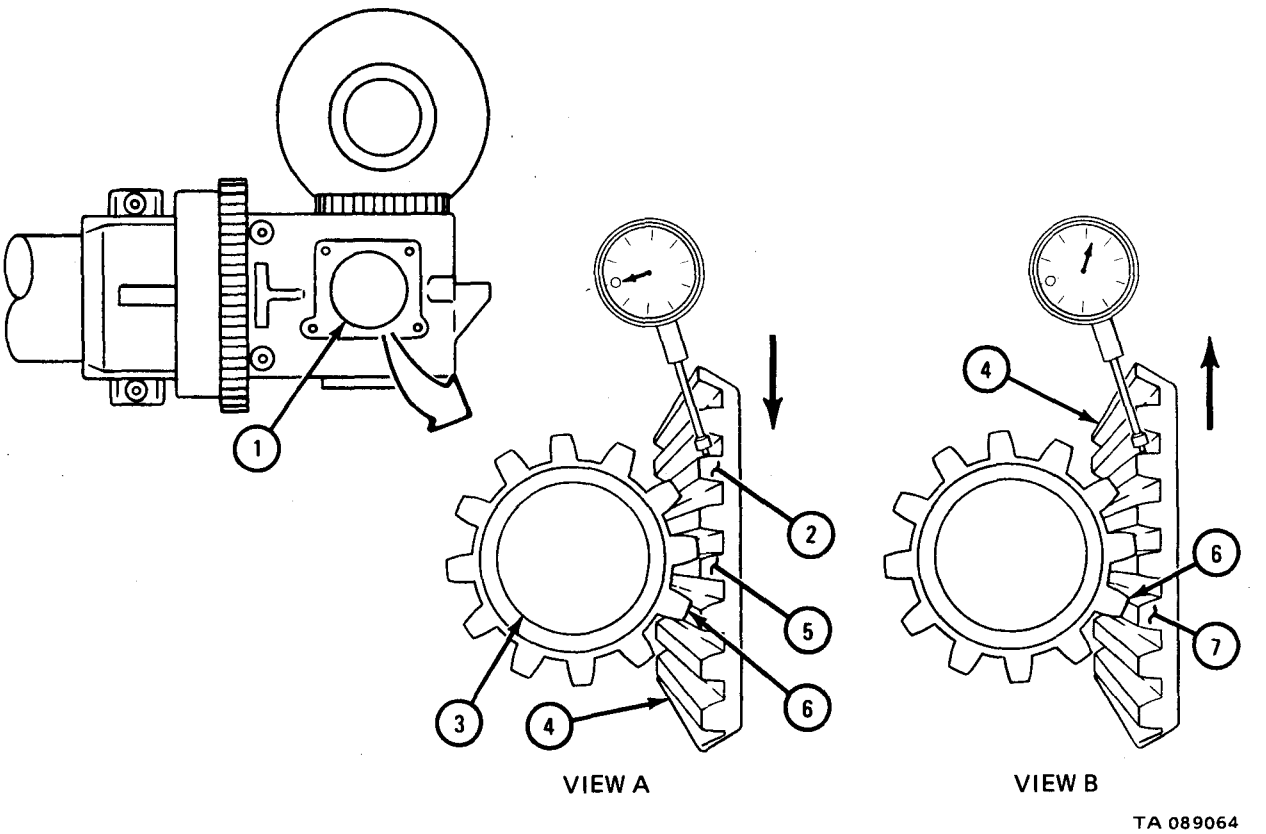

FRAME 4

1. Remove intermediate gear assembly. Refer to para 17-47a and para 17-47b.
2. Disassemble feed gear and hub assembly. Refer to para 17-47c.
3. If reading in step 4 of frame 3 is less than 0.006 inch, do the following:
   a. Take 0.006 inch thickness from feed gear shim set (1).
   b. Add 0.006 inch thickness to drive and feed gear shim set (2).
4. If reading in step 4 of frame 3 is more than 0.024 inch, do the following:
   a. Add 0.018 inch thickness to feed gear shim set (1).
   b. Take 0.018 inch thickness from drive and feed gear shim set (2).
5. Assemble intermediate gear assembly. Refer to para 17-47 g.
6. Replace intermediate gear assembly. Refer to para 17-47h.
7. Do frame 1 again.

END OF TASK

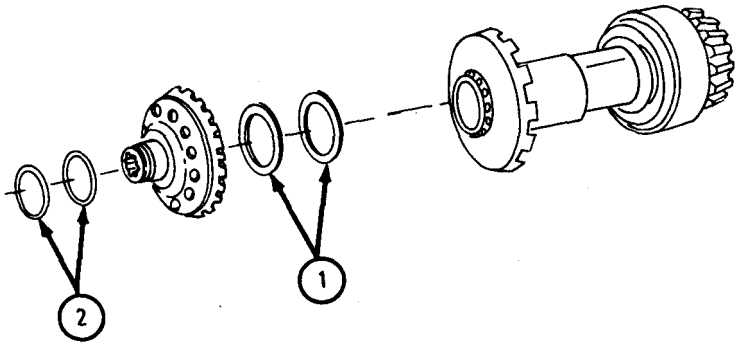

TA 089065

(2) First reduction feed gear and hub assembly.

FRAME 1

1. Working through shaft hole in power leveler mounting flange (1), check that front edge of intermediate case first reduction feed gear and hub assembly (2) is alined with front edge of drive clutch and brake first reduction feed pinion (3) as shown.
2. If gears (2 and 3) are not alined, note the way gears are alined.

IF GEARS ARE NOT ALINED, GO TO FRAME 2.
IF GEARS ARE ALINED, GO TO FRAME 3

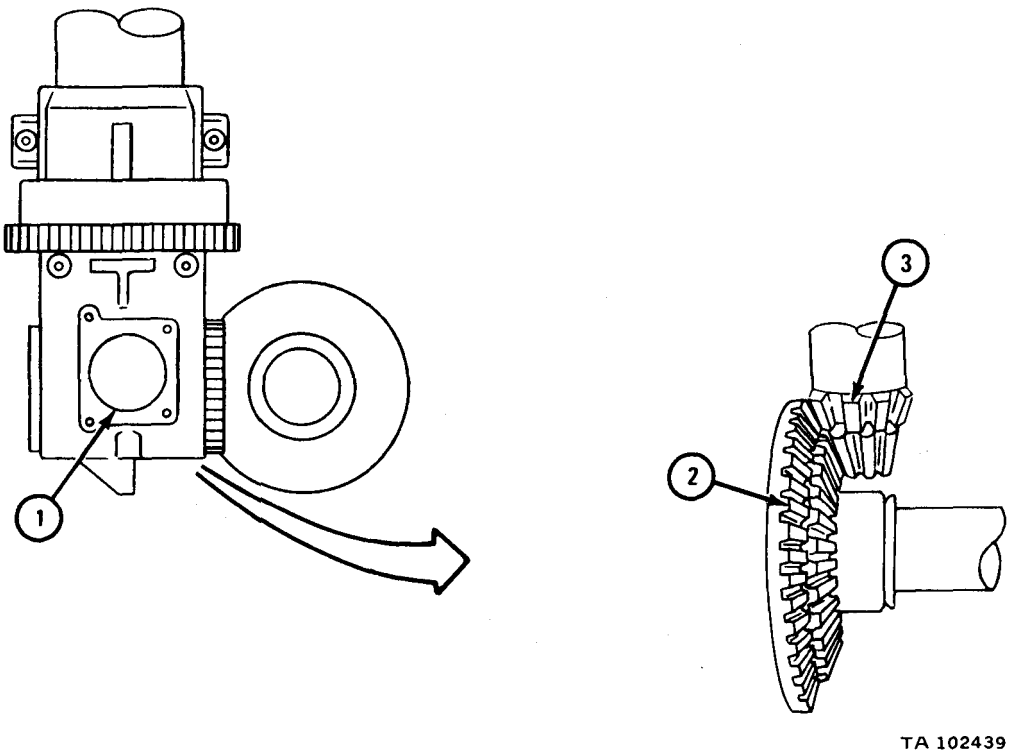

FRAME 2

1. Remove and disassemble feed clutch shaft and coupling assembly, Refer to para 17-47b and 17-47c.
2. If first reduction feed gear and hub assembly (1) and drive clutch and brake first reduction feed pinion (2) are alined as noted in frame 1 and shown in view A, add one feed clutch bearing shim (3).
3. If first reduction feed gear and hub assembly (1) and drive clutch and brake first reduction feed pinion (2) are alined as noted in frame 1 and shown in view B, take out one feed clutch bearing shim (3).
4. Assemble feed clutch shaft and coupling assembly. Refer to para 17-47g.
5. Replace feed clutch shaft and coupling assembly. Refer to para 17-47h.
6. Do frame 1 again.

GO TO FRAME 3

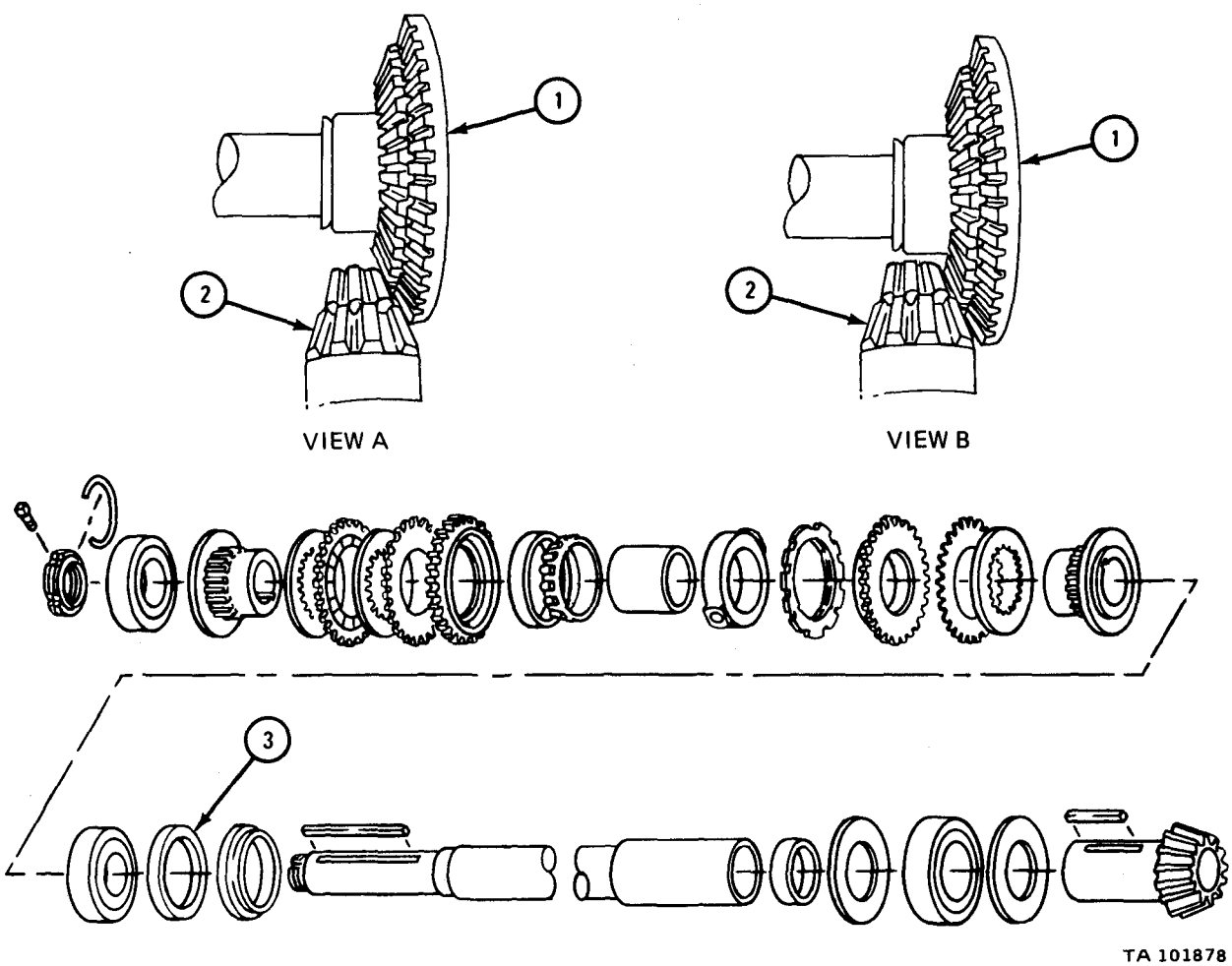

FRAME 3

1. Working through shaft hole in power leveler mounting flange (1), put mounting dial indicator on housing and set stem against side of feed gear and hub assembly tooth (2) as shown.

NOTE

When measuring backlash, make sure first reduction feed pinion (3) does not turn. If pinion turns, backlash readings will be wrong.

2. Turn feed gear and hub assembly (4) away from dial indicator until feed gear and hub assembly tooth (5) touches pinion tooth (6) as shown in view A.
3. Set dial indicator to read 0.
4. Turn feed gear and hub assembly (4) toward dial indicator until feed gear and hub assembly tooth (7) touches other side of pinion tooth (6) as shown in view B. Note reading on dial indicator.

IF READING ON DIAL INDICATOR IS NOT 0.006 TO 0.020 INCH, GO TO FRAME 4.
IF READING ON DIAL INDICATOR IS 0.006 TO 0.020 INCH, END OF TASK

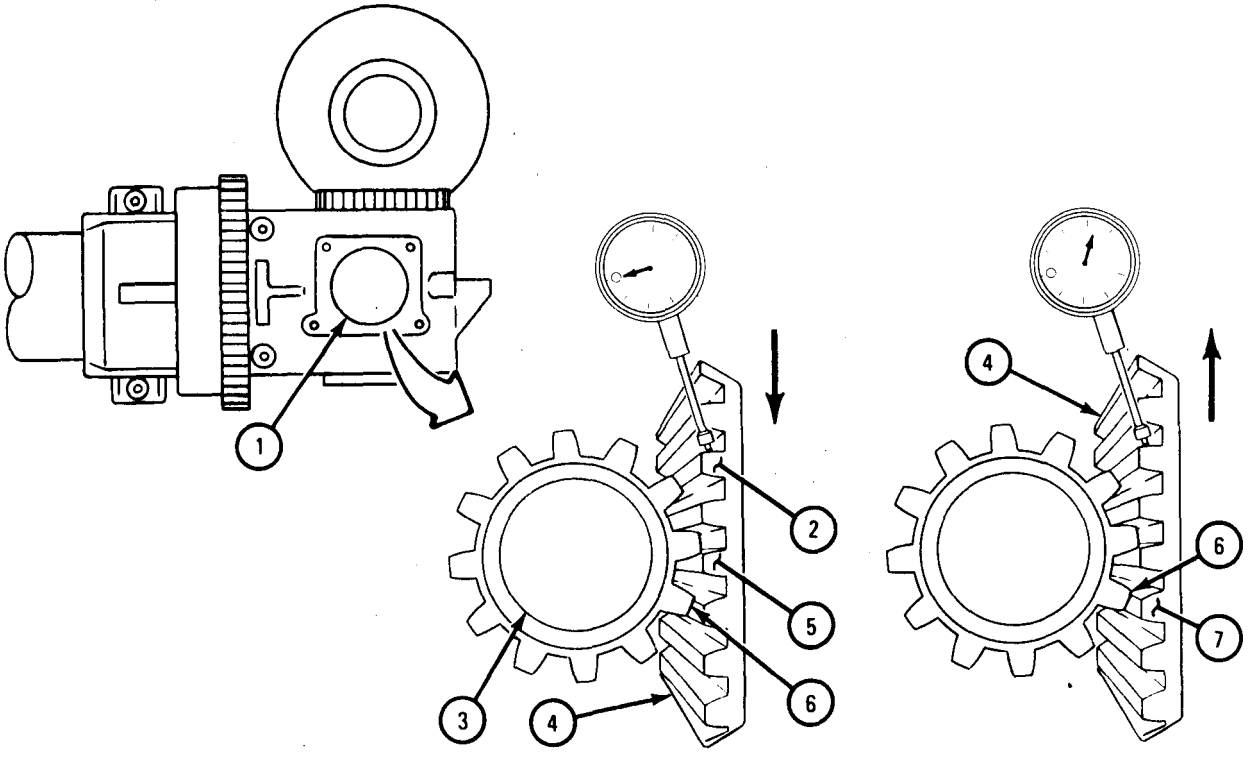

FRAME 4

1. Remove intermediate gear assembly. Refer to para 17-47a and 17-47b.
2. Disassemble feed gear and hub assembly. Refer to para 17-47c.
3. If reading in step 4 of frame 3 is less than 0.006 inch, do the following:
   a. Take 0.006 inch thickness from feed gear shim set (1).
   b. Add 0.006 inch thickness to drive and feed gear shim set (2).
4. If reading in step 4 of frame 3 is more than 0.020 inch, do the following:
   a. Add 0.014 inch thickness to feed gear shim set (1).
   b. Take 0.014 inch thickness from drive and feed gear shim set (2).
5. Assemble intermediate gear assembly. Refer to para 17-47g.
6. Replace intermediate gear assembly. Refer to para 17-47h.
7. Do frame 1 again.

END OF TASK

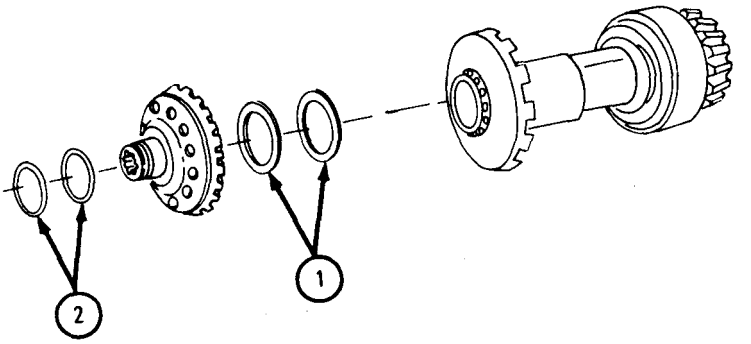

TA 089065

(3) Feed pinion.

FRAME 1

1. Take out eight machine bolts (1) and lockwashers (2).
2. Take off inspection plate (3) and gasket (4).
3. Working through inspection hole (5), check that front edge of intermediate case second reduction feed pinion (6) is alined with front edge of boring case rack feed idler gear (7) as shown.
4. If gears (6 and 7) are not alined, note the way gears are alined.

IF GEARS ARE NOT ALINED, GO TO FRAME 2.
IF GEARS ARE ALINED, GO TO FRAME 3

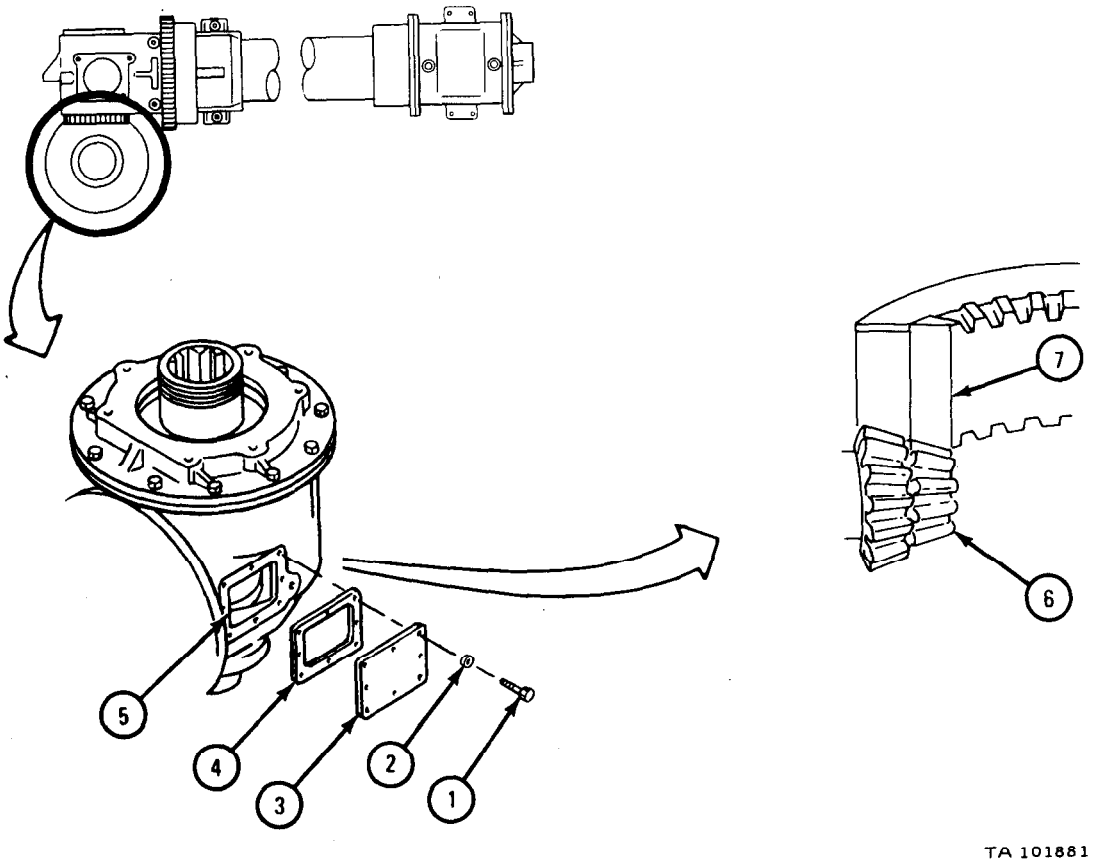

FRAME 2

1. If intermediate case second reduction feed pinion (1) and boring case rack feed idler gear (2) are alined as noted in frame 1 and shown in view A, add one feed pinion bearing shim (3).
2. If intermediate case second reduction feed pinion (1) and boring case rack feed idler gear (2) are alined as noted in frame 1 and shown in view B, take off one feed pinion bearing shim (3).

GO TO FRAME 3

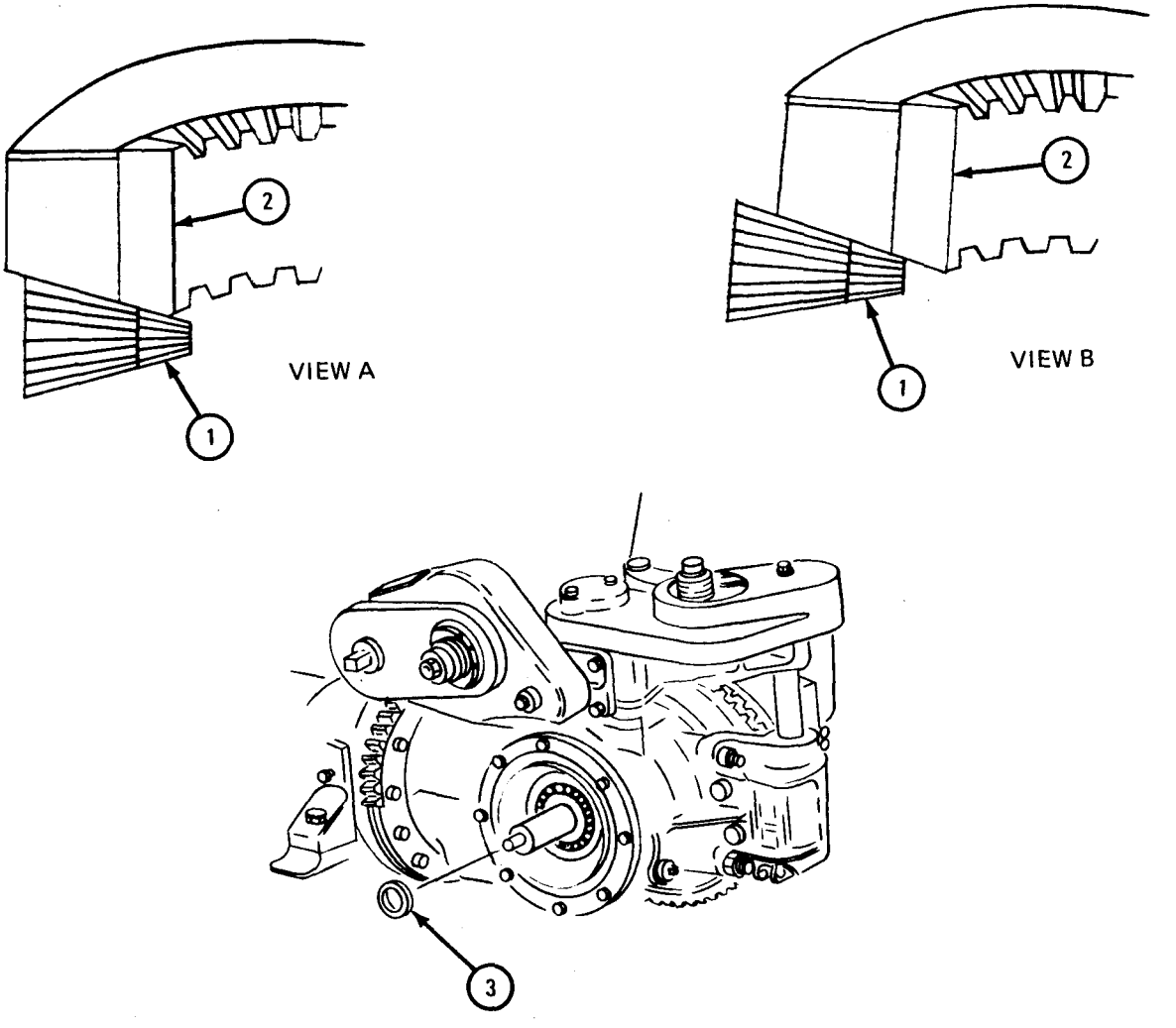

FRAME 3

1. Working through boring case inspection hole (1), mount dial indicator on housing and set stem against side of rack feed idler gear tooth (2) as shown.

NOTE

When measuring backlash, make sure second reduction feed pinion (3) does not turn. If pinion turns, backlash readings will be wrong.

2. Turn idler gear (4) away from dial indicator until idler gear tooth (5) touches pinion tooth (6) as shown in view A.
3. Set dial indicator to read 0.
4. Turn idler gear (4) toward dial indicator until idler gear tooth (7) touches other side of pinion tooth (6) as shown in view B. Note reading & dial indicator.

IF READING ON DIAL INDICATOR IS NOT 0.011 TO 0.034 INCH, GO TO FRAME 4.
IF READING ON DIAL INDICATOR IS 0.011 TO 0.034 INCH, END OF TASK

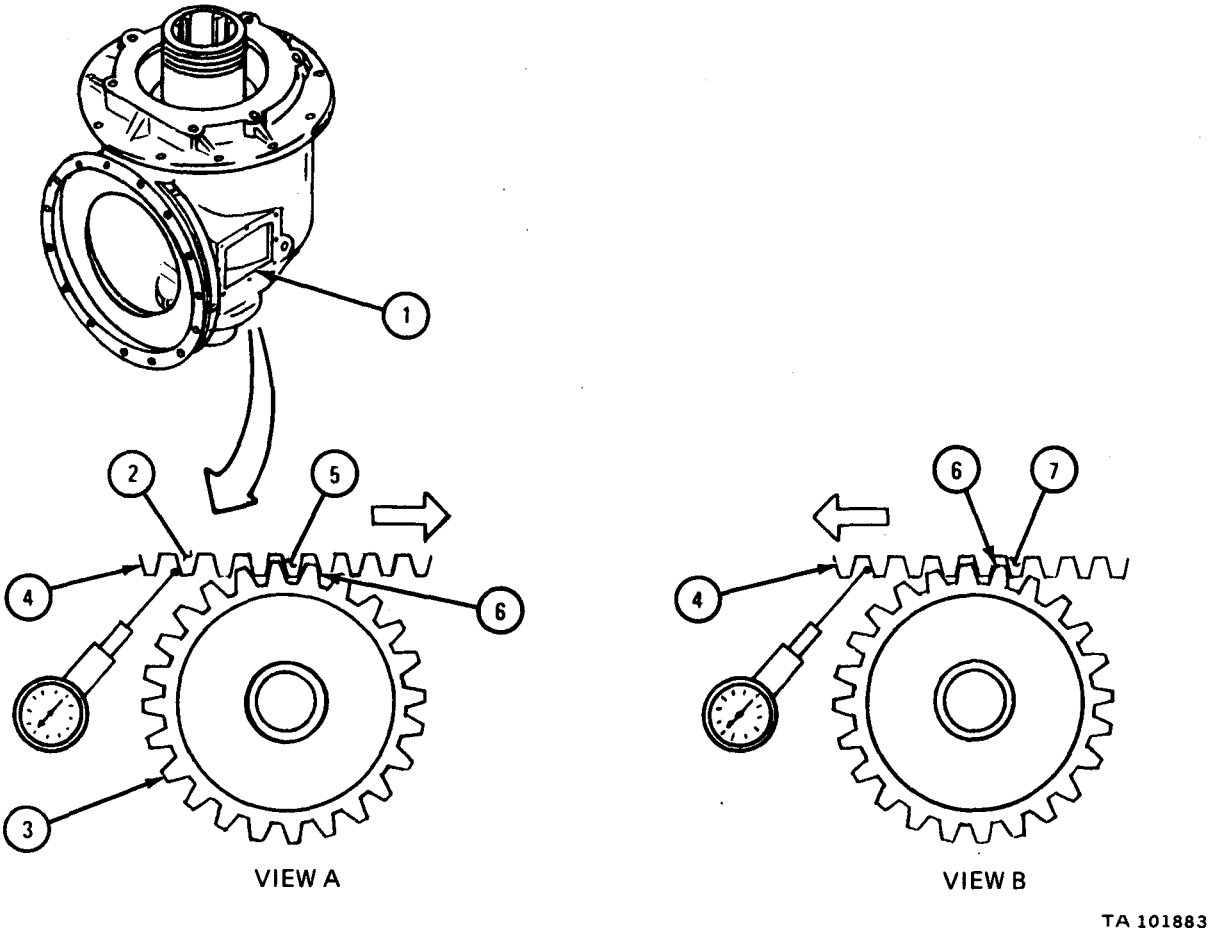

FRAME 4

1. Remove and disassemble boring case gear assembly. Refer to para 17-46.
2. If reading in step 4 of frame 3 is less than 0.011 inch, do the following:
   a. Add 0.011 inch thickness to lower rack carrier bearing shim set (1).
   b. Take out 0.011 inch thickness from upper rack carrier bearing shim set (2).
   c. Add 0.011 inch thickness to rack drive gear shim set (3).
3. If reading in step 4 of frame 3 is more than 0.034 inch, do the following:
   a. Take out 0.020 inch thickness from lower rack carrier bearing shim set (1).
   b. Add 0.020 inch thickness to upper rack carrier bearing shim set (2).
4. Assemble and replace boring case gear assembly. Refer to para 17-46.

END OF TASK

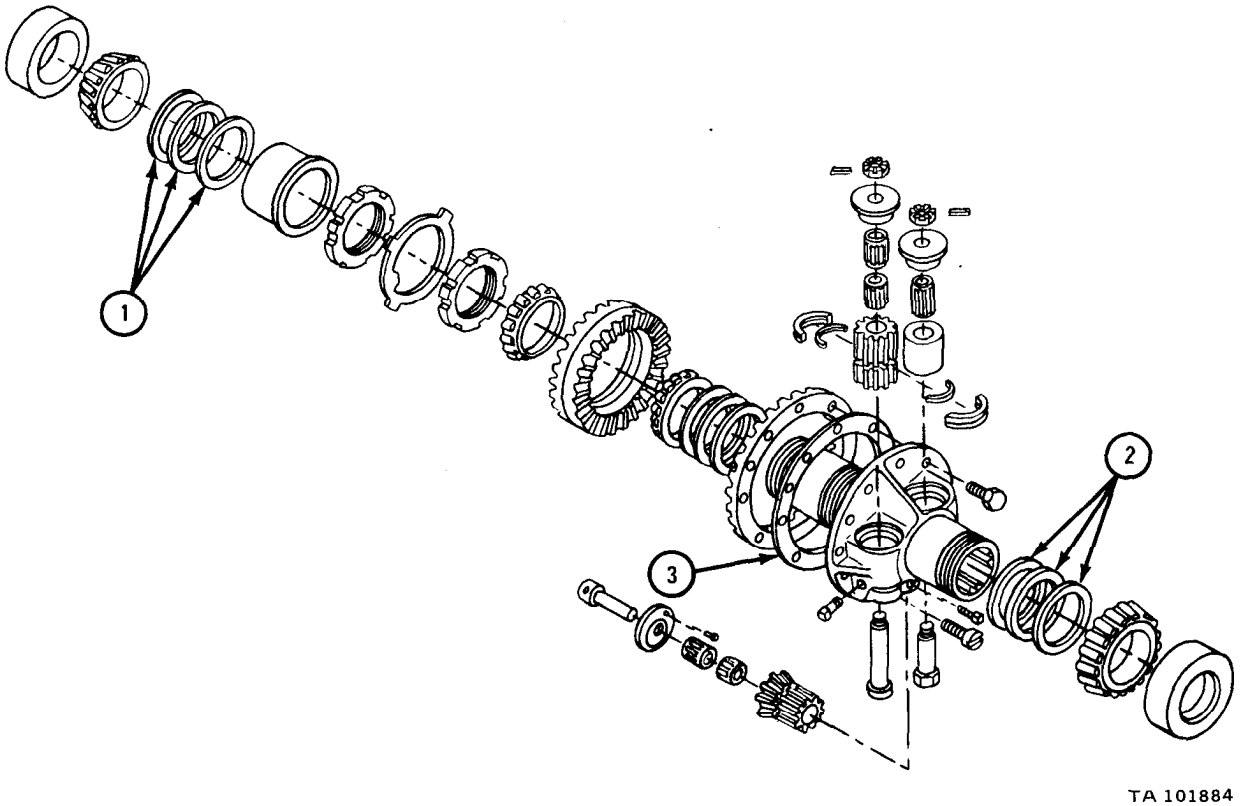

(4) Drive pinion.

FRAME 1

1. Working through inspection hole (1), check that front edge of intermediate case second reduction drive pinion (2) is alined with front edge of boring case rack drive gear (3) as shown.
2. If gears are not alined, note the way they are alined.

IF GEARS ARE NOT ALINED, GO TO FRAME 2.
IF GEARS ARE ALINED, GO TO FRAME 3

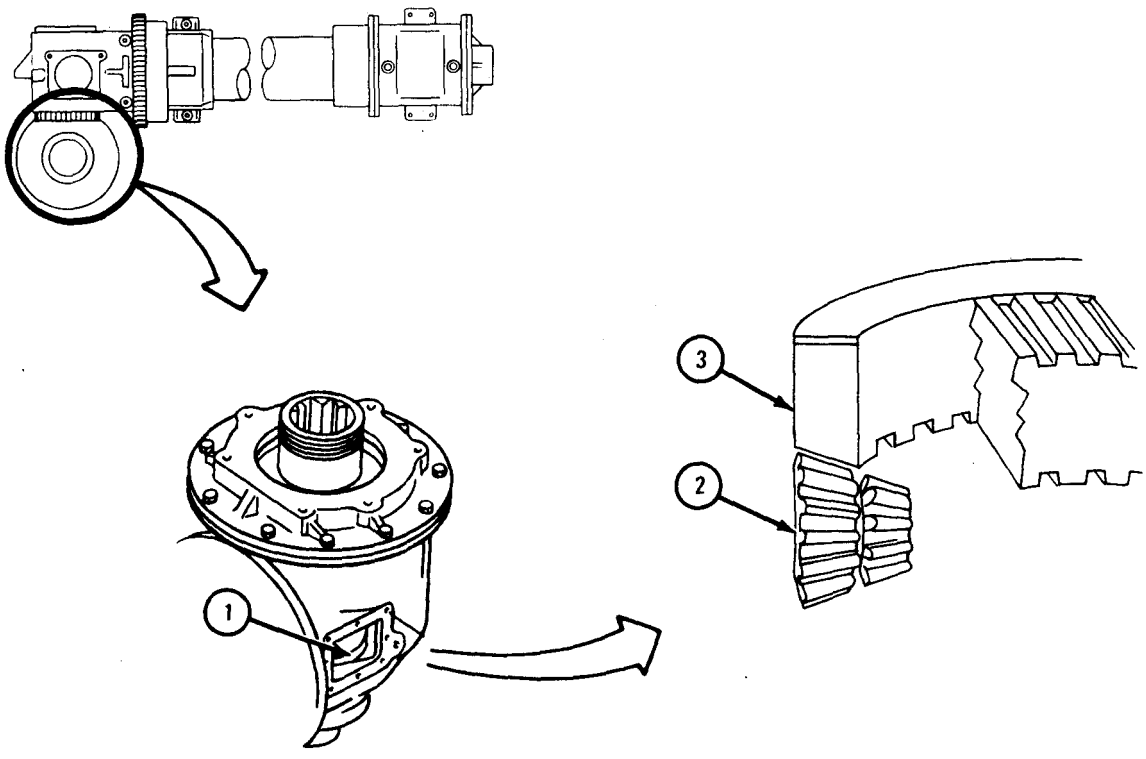

TA 101885

FRAME 2

1. Remove and disassemble intermediate gear assembly. Refer to para 17-47b and para 17-47c.
2. If intermediate case second reduction drive pinion (1) and boring case rack drive gear (2) are alined as noted in frame 1 and shown in view A, add one second reduction feed pinion bearing shim (3).
3. If intermediate case second reduction drive pinion (1) and boring case rack drive gear (2) are alined as noted in frame 1 and shown in view B, take out one second reduction feed pinion bearing shim (3).
4. Assemble and replace intermediate gear assembly. Refer to para 17-47g and para 17-47h.
5. Do frame 1 again.

GO TO FRAME 3

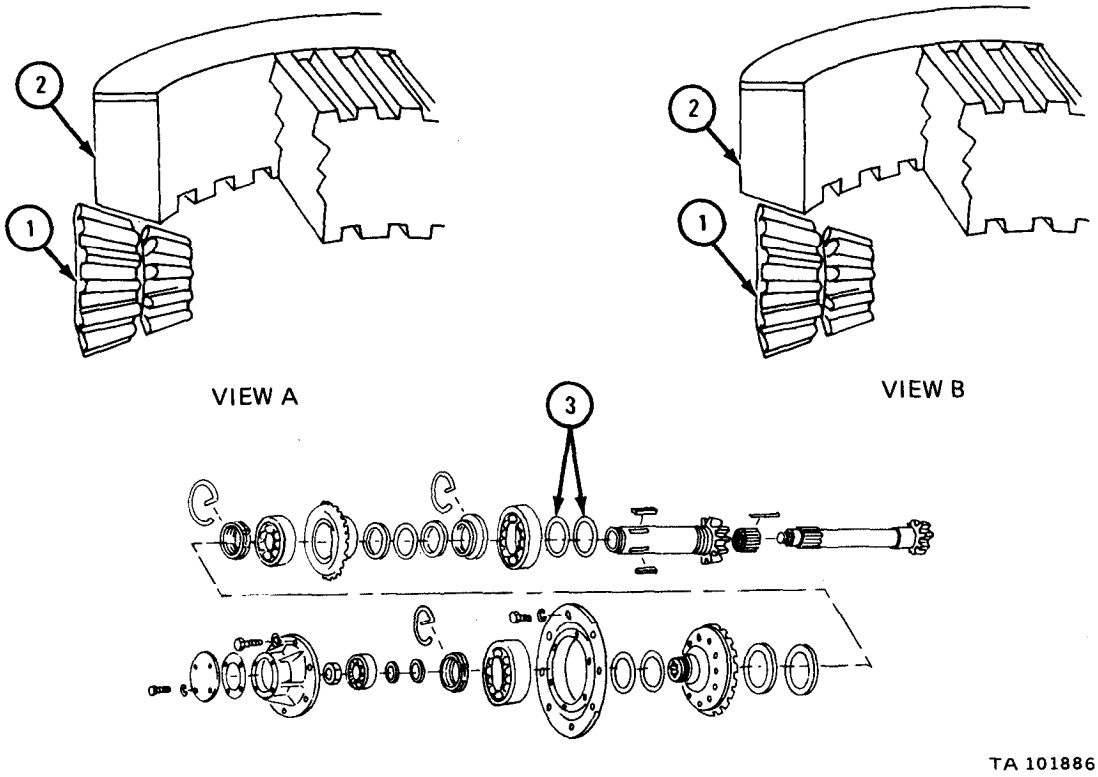

FRAME 3

1. Working through boring case inspection hole (1), mount dial indicator on housing and set stem against side of rack drive gear tooth (2) as shown.

NOTE

When measuring backlash, make sure second reduction drive pinion (3) does not turn. If pinion turns, backlash readings will be wrong.

2. Turn rack drive gear (4) away from dial indicator until rack drive gear tooth (5) touches pinion tooth (6) as shown in view A.
3. Set dial indicator to read 0.
4. Turn rack drive gear (4) toward dial indicator until rack drive gear tooth (7) touches other side of pinion tooth (6) as shown in view B. Note reading on dial indicator.

IF READING ON DIAL INDICATOR IS NOT 0.008 TO 0.030 INCH, GO TO FRAME 4.
IF READING ON DIAL INDICATOR IS 0.008 TO 0.030 INCH, END OF TASK

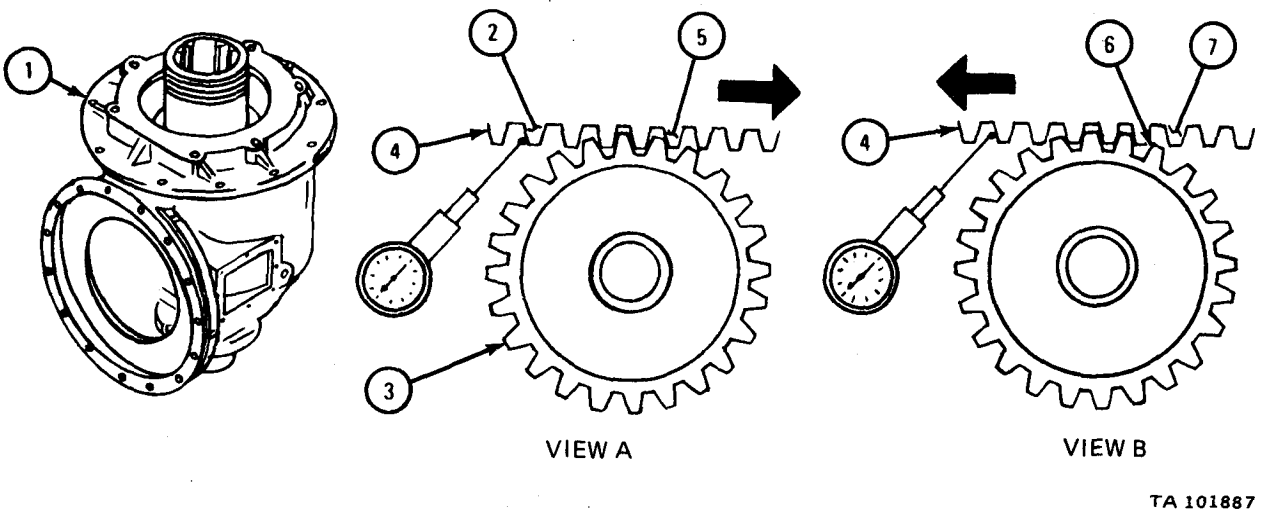

FRAME 4

1. Remove and disassemble boring case gear assembly. Refer to para 17-46.
2. If readingin step 4 of frame 3 is less than 0.008 inch, add 0.008 inch thickness to rack drive gear shim set (1).
3. If readingin step 4 of frame 3 is more than 0.030 inch, take off 0.020 inch thickness from rack drive gear shim set (1).
4. Assemble and replace boring case gear assembly. Refer topara 17-46.
5. Do frame 1 again.

GO TO FRAME 5

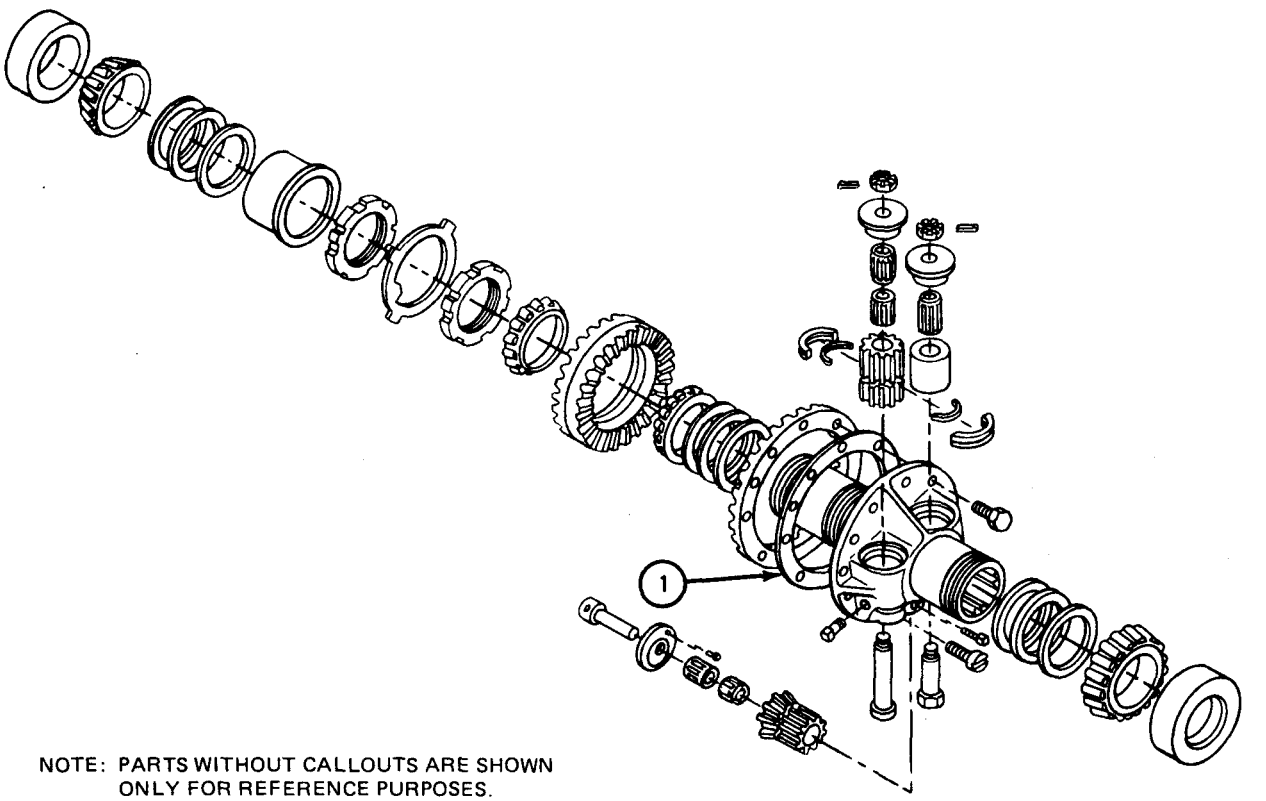

NOTE: PARTS WITHOUT CALLOUTS ARE SHOWN ONLY FOR REFERENCE PURPOSES.

TA 101888

FRAME 5

1. Put in six capscrews (1) and lock washers (2).
2. Put intermediate case cap (3) into place and aline screw holes. Put in six capscrews (4) and lockwashers (5).
3. Put gasket (6) and access cover (7) into place and aline screw holes. Put in four bolts (8) and lockwashers (9).

GO TO FRAME 6

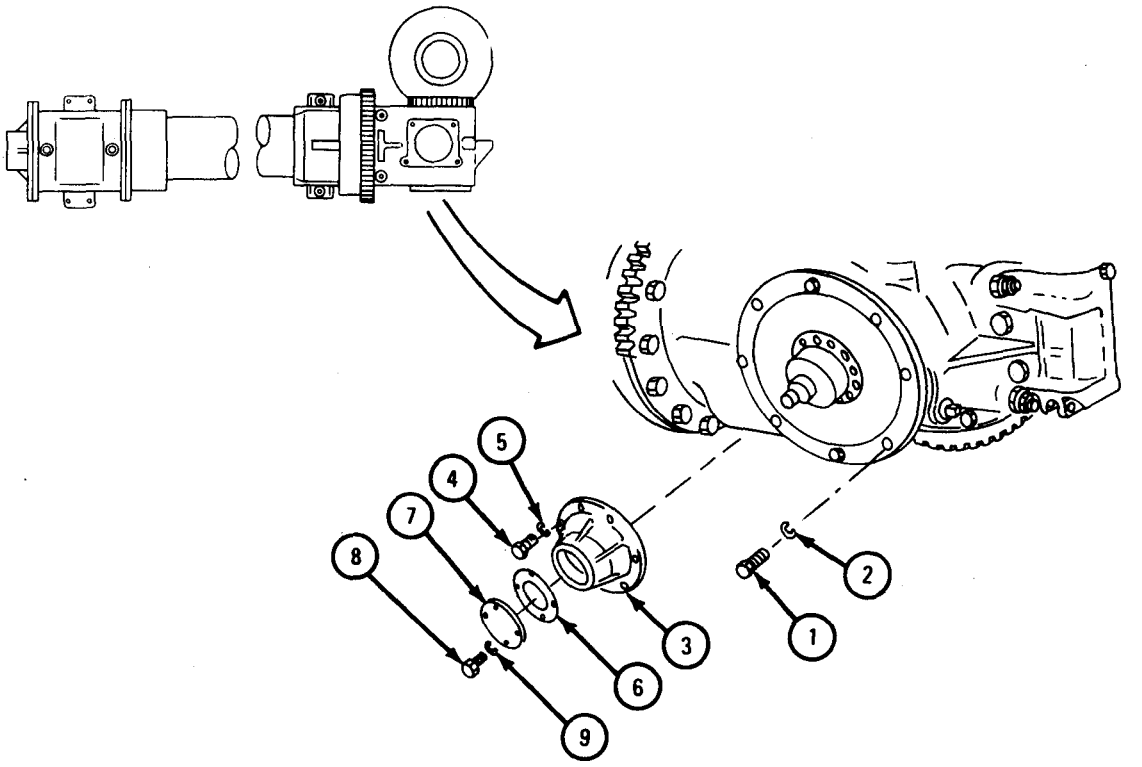

TA 101889

FRAME 6

1. Put gasket (1) and boring case inspection plate (2) into place and aline screw holes.
2. Put in eight machine bolts (3) and lockwashers (4).

NOTE

Follow-on Maintenance Action Required:

1. Replace vertical leveling worm. Refer to para 17-50.
2. Replace power leveler. Refer to para 17-53.
3. Replace horizontal leveling worm. Refer to para 17-49.
4. Replace integral derrick assembly and auger rack bar. Refer to para 17-56.
5. Fill intermediate gear case. Refer to LO 9-2320-209-12/1.

END OF TASK

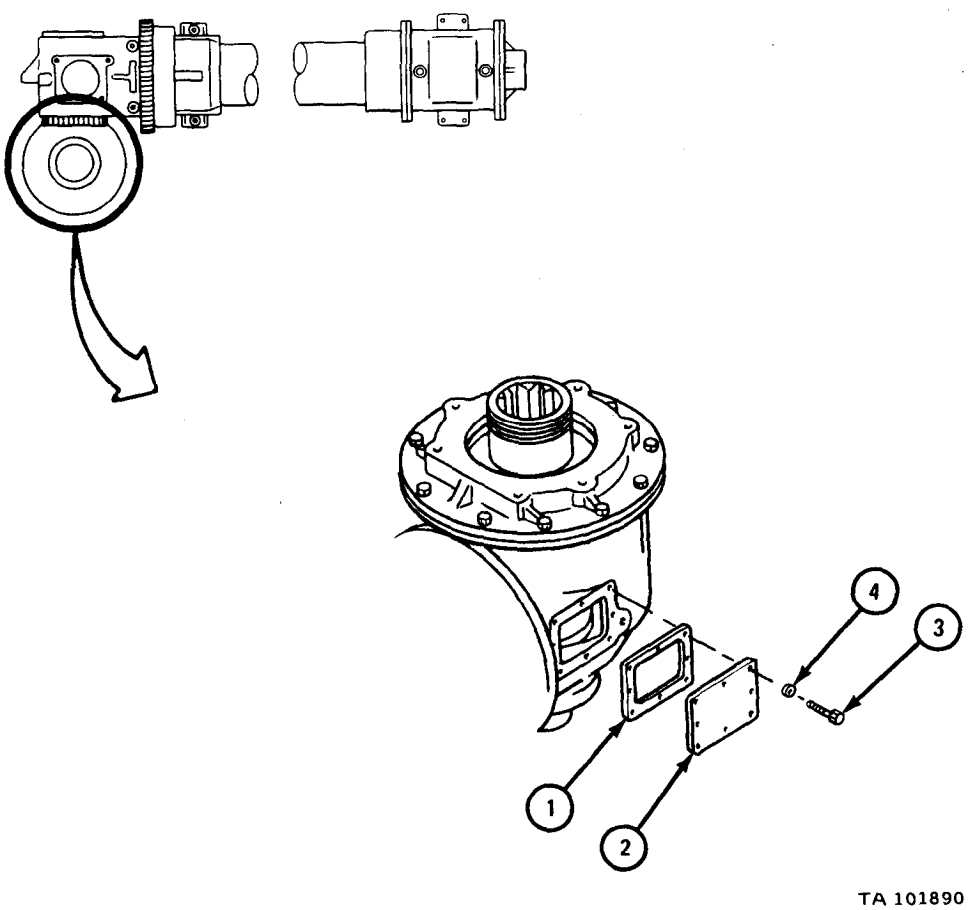

17-48. MAIN DRIVE IDLER GEAR ASSEMBLY REMOVAL, REPAIR, AND REPLACEMENT (TRUCK M764).

TOOLS: No special tools required

SUPPLIES: Artillery and automotive grease, type GAA, MIL-L-2104
Lubricating oil, ICE, OE/HDO 10, MIL-L-2104
Solvent, dry cleaning, type II (SD-2), Fed. Spec P-D-680
Idler gear housing-to-clutch case gasket
Bearing and seal retainer-to-idler gear housing gasket (2)
Oil seal
Flange gasket

PERSONNEL: Two

EQUIPMENT CONDITION: Truck parked, engine off, handbrake set.

a. Preliminary Procedures.

(1) Remove earth boring machine. Refer to para 17-46.

(2) Drain oil from main drive idler gear housing. Refer to LO 9-2320-209-12/1.

b. Removal.

FRAME 1

Soldier A 1. Hold lower main idler gear housing (1).
Soldier B 2. Take off eight nuts (2).
3. Take out eight screws (3).
Soldier A 4. Lower housing (1) to the ground.
Soldier B 5. Take off and throw away gasket (4).
END OF TASK

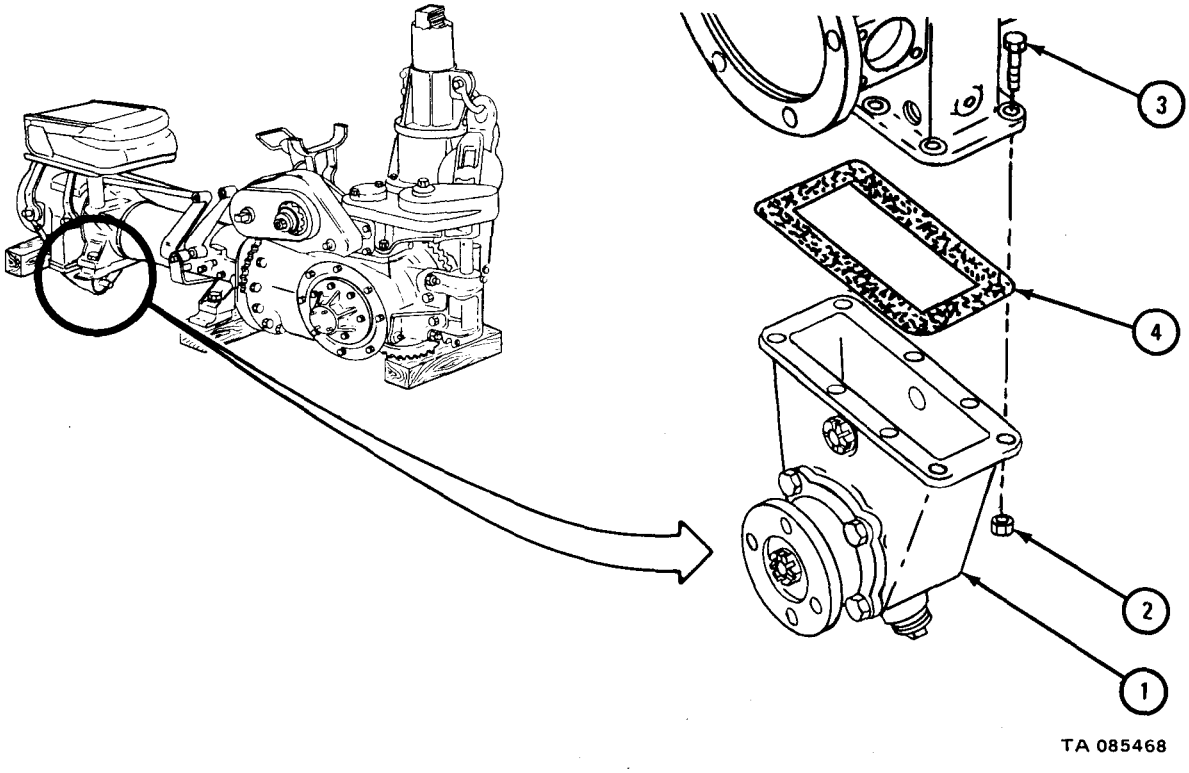

c. Disassembly.

FRAME 1

1. Take off cotter pin (1) and nut (2) from main drive idler gear shaft (3). Throw away cotter pin.
2. Take out main drive idler gear shaft (3) and pull off packing (4). Throw away preformed packing.
3. Pull off preformed packing (5) and throw it away.
4. Lift out idler gear assembly (6).

GO TO FRAME 2

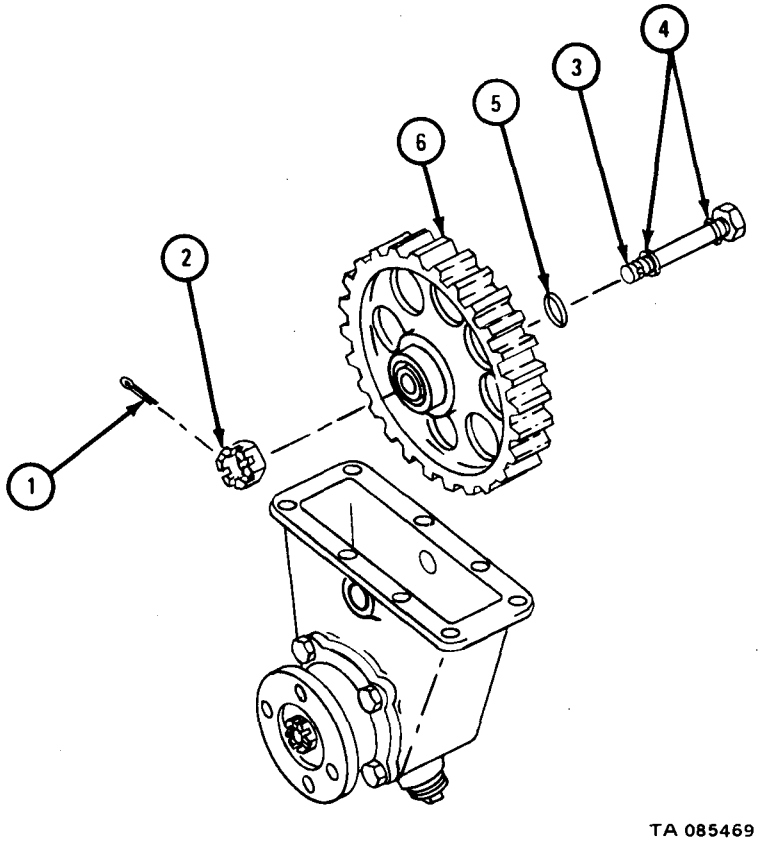

FRAME 2

1. Press out idler gear ball bearing (1) and idler gear bearing spacer (2) from idler gear (3).
2. Press out idler gear ball bearing (4) from idler gear (3).
3. Press idler gear ball bearing (1) off idler gear bearing spacer (2).

GO TO FRAME 3

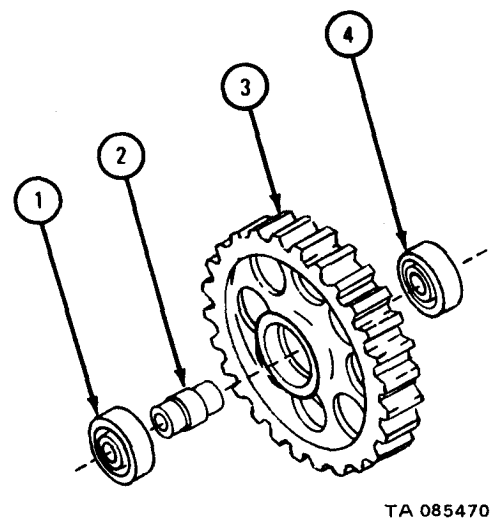

FRAME 3

1. Take off cotter pin (1), nut (2), and washer (3). Throw away cotter pin.
2. Pull off flange (4).
3. Take out machine key (5).
40 Take out and throw away flange gasket (6).

GO TO FRAME 4

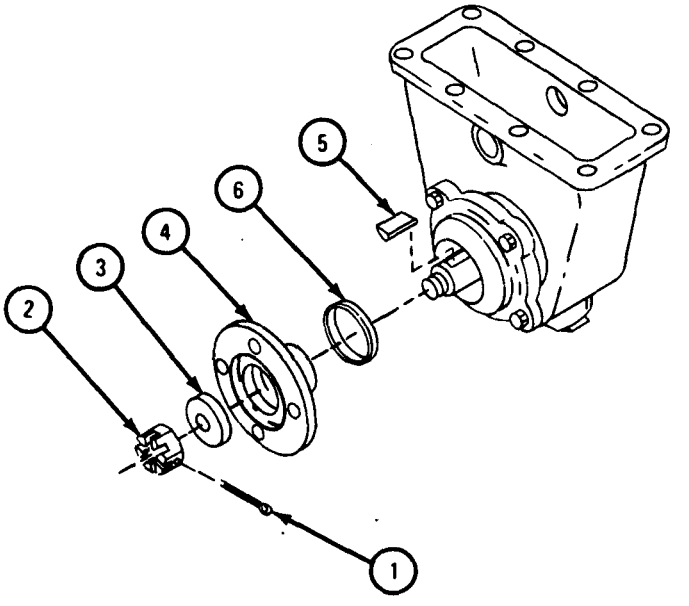

TA 085471

FRAME 4

1. Take off eight screws (1) and lockwashers (2) from retainers (3 and 4).
2. Tap threaded end of gear shaft assembly (5) with soft-faced hammer until puller can be put on retainer (4).
3. Pull off rear retainer (4) and gasket (6). Throw away gasket.
4. Tap unthreaded end of gear shaft assembly (5) to loosen front retainer (3).
5. Pull off front retainer (3), gear shaft assembly (5), and gasket (7) from main drive idler gear housing (8).
6. Pull off retainer (3) and gasket (7) from gear shaft assembly (5) and throw away gasket.

NOTE

When pulling off retainer (3), bearing may also come off shaft with retainer.

GO TO FRAME 5

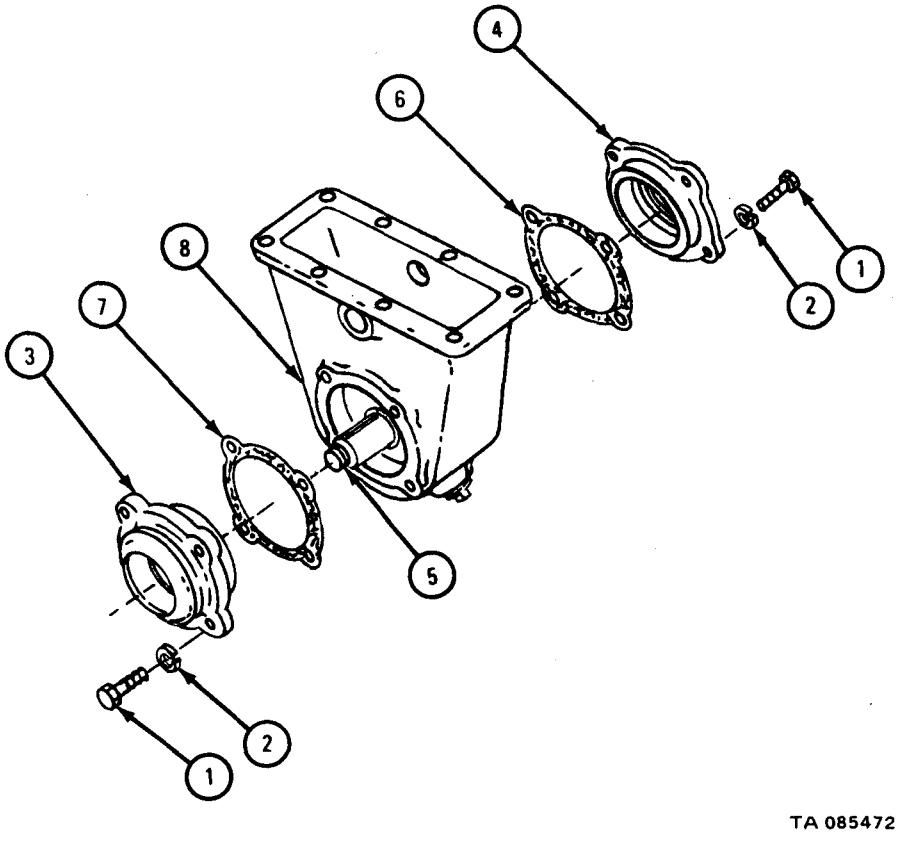

FRAME 5

1. Press oil seal (1) from rear retainer (2). Throw away oil seal.
2. Do step 1 again for front retainer.

NOTE

If bearing stayed with front retainer, press bearing and seal from front retainer.

GO TO FRAME 6

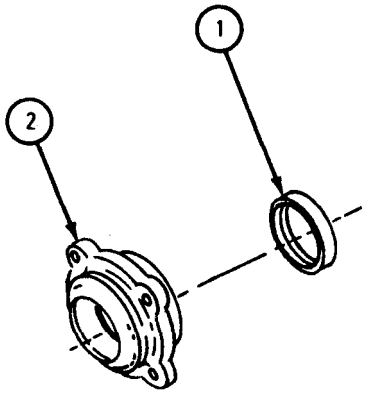

TA 085473

FRAME 6

1. Pull bearing (1) off gear shaft (2). Take off main drive gear (3).
2. Loosen set screw (4), in collar (5), three turns.
3. Press shaft (2) out of collar (5) and bearing (1).
4. Take out machine key (6).
5. Take off preformed packing (7) and throw it away.

END OF TASK

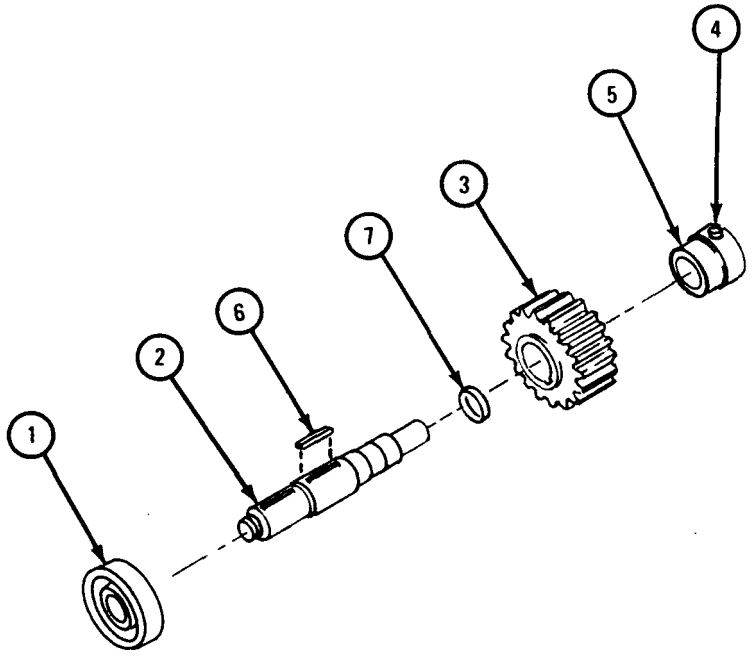

TA 085474

d. Cleaning.

(1) Clean all bearings. Refer to Part 1, para 10-3.

(2) There are no special cleaning procedures needed for all other parts. Refer to cleaning procedures given in Part 1, para 1-3.

e. Inspection and Repair.

FRAME 1

1. Check that main drive idler spur gear (1) and main drive spur gear (2) do not have sharp fins or burrs at tooth corners.
2. Check that tooth faces are not pitted or damagedin any other way. If gears have chipped or broken teeth, throw them out and get new ones in their places. Using honing stone, smooth nicks, scores or burrs.

GO TO FRAME 2

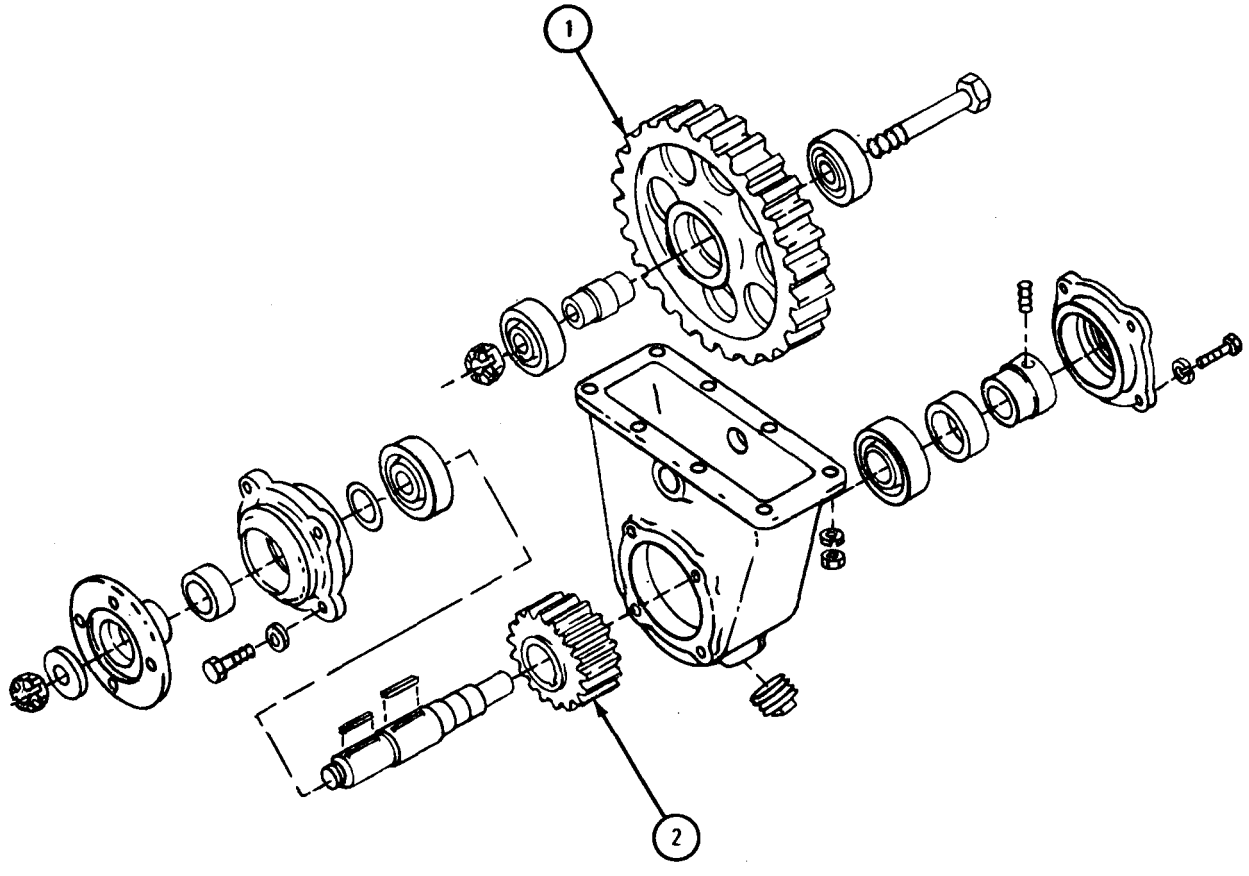

NOTE: CHECK ONLY THOSE PARTS WHICH ARE CALLED OUT IN THIS FRAME. PARTS WITHOUT CALLOUTS ARE SHOWN ONLY FOR REFERENCE PURPOSES OR ARE CHECKED IN ANOTHER FRAME.

TA 085475

FRAME 2

1. Check that main drive gear shaft (1), idler gear shaft (2), and idler gear bearing spacer (3) do not have cracks and that shafts are not bent or warped. Take off raised metal, nicks or scratches with a honing stone and polish machined surfaces with crocus cloth. If more repair is needed, throw out parts and get new ones in their places.
2. Check that two sleeves (4) are not damaged. Cut off damaged sleeves and press on new ones.

GO TO FRAME 3

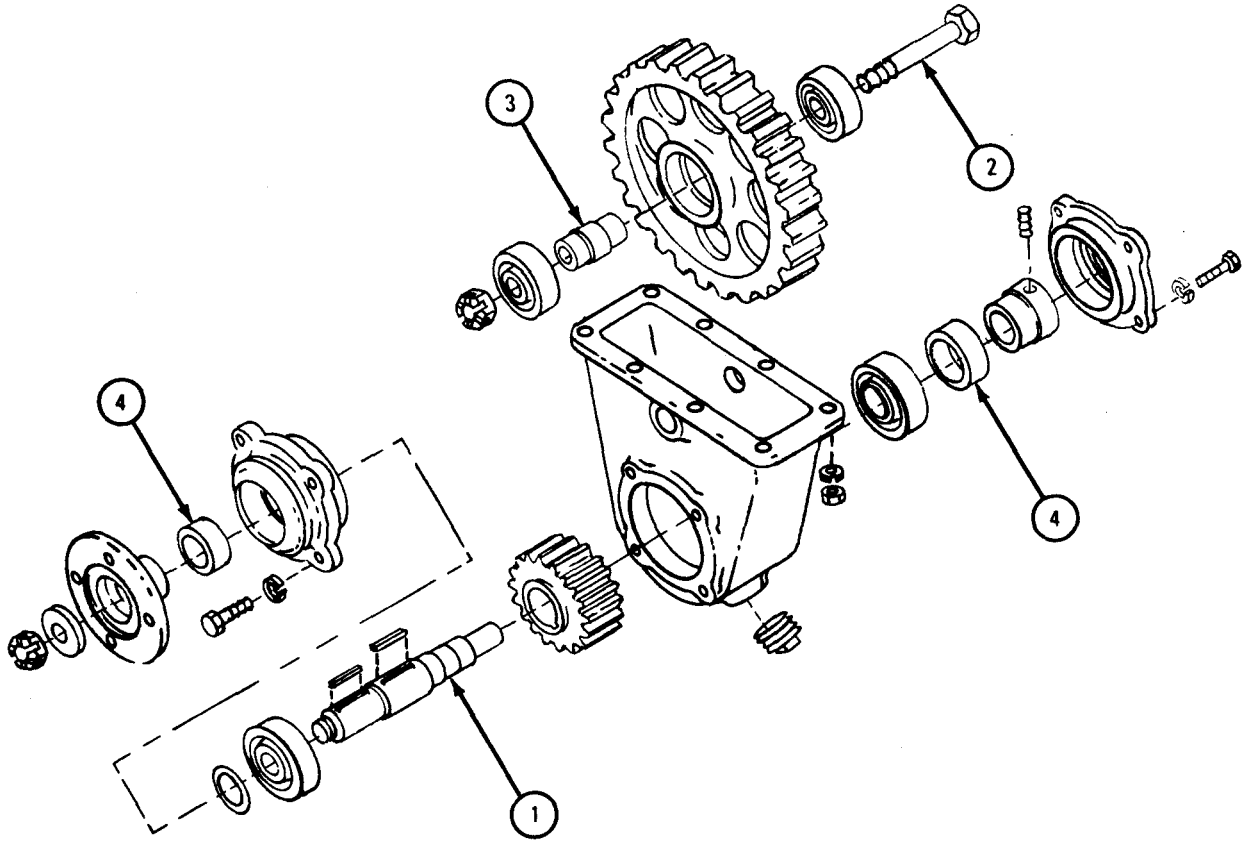

NOTE: CHECK ONLY THOSE PARTS WHICH ARE CALLED OUT IN THIS FRAME. PARTS WITHOUT CALLOUTS ARE SHOWN ONLY FOR REFERENCE PURPOSES OR ARE CHECKED IN ANOTHER FRAME.

TA 085476

FRAME 3

1. Check that two idler gear ball bearings (1) and two gear shaft ball bearings (2) are not damaged. Refer to Part 1, para 10-8.

END OF TASK

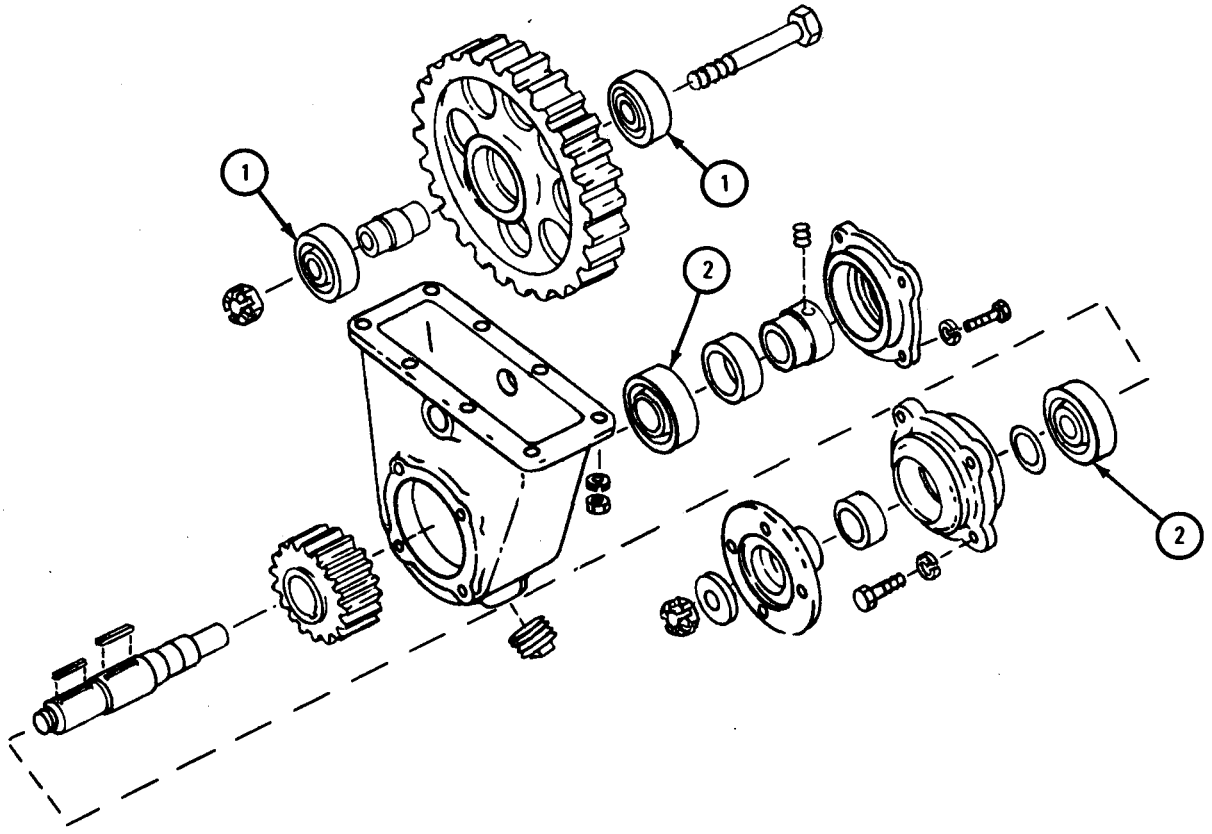

NOTE: PARTS WITHOUT CALLOUTS ARE SHOWN ONLY FOR REFERENCE PURPOSES.

TA 085477

f. Assembly.

FRAME 1

1. Press oil seal (1) into rear retainer (2).
2. Do steps 1 and 2 again on front retainer.

GO TO FRAME 2

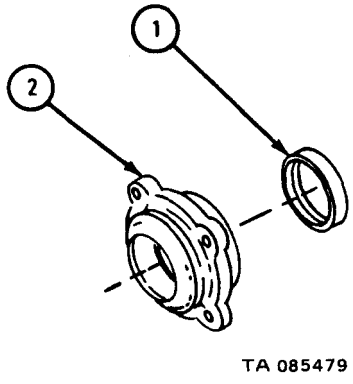

FRAME 2

1. Press bearing (1) on main drive shaft (2).
2. Put in key (3) and put preformed packing (4) on main drive shaft (2).
3. Aline keyway in main drive gear (5) with key in main drive shaft (2) and put on gear.
4. Press bearing (6) and collar (7) on main drive shaft (2).
5. Tighten setscrew (8).
6. Press main drive gear assembly (9) in front retainer, putting threaded end in first.

GO TO FRAME 3

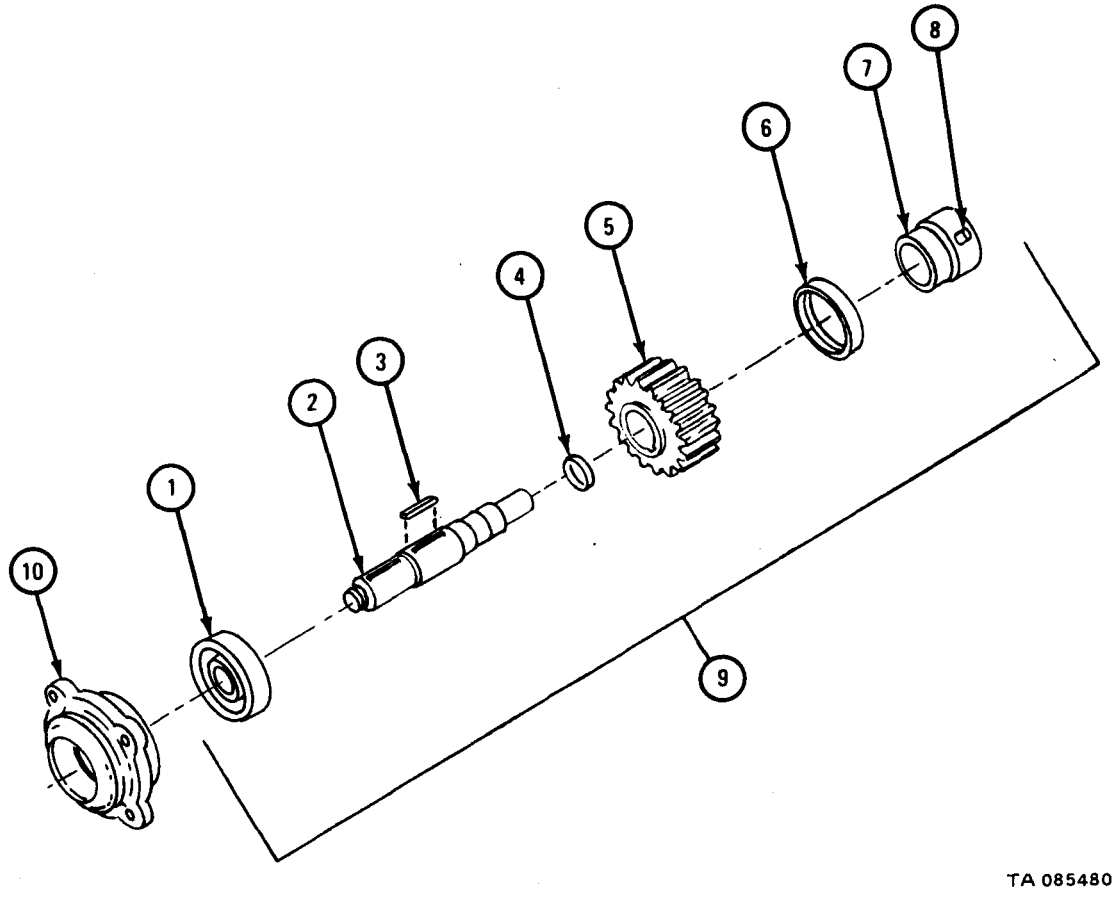

FRAME 3

1. Put gasket (1) on front retainer (2) and aline holes,
2. Put front retainer (2) with gasket (1) and main drive gear assembly (3) in housing (4) and aline holes.
3. Put in four screws (5) and lockwashers (6). Tighten every other screw evenly until retainer (2) is flush with housing (4).
4. Put gasket (7) on rear retainer (8). Aline holes in gasket with holes in housing (4).
5. Put in four screws (9) and lockwashers (10).

GO TO FRAME 4

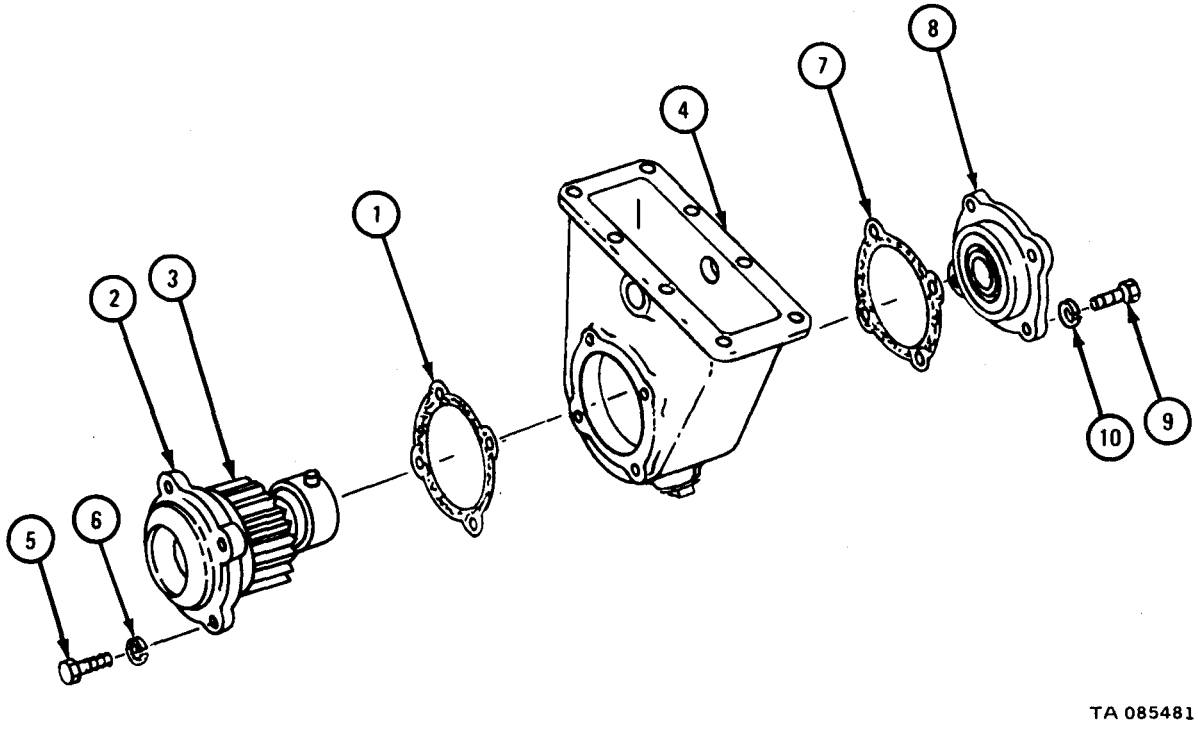

FRAME 4

1. Put in gasket (1).
2. Put machine key (2) in gear shaft (3).
3. Press on flange (4), washer (5), and nut (6). Make sure that gear shaft (3) turns freely without end play before putting in cotter pin (7).
4. Put in cotter pin (7).

GO TO FRAME 5

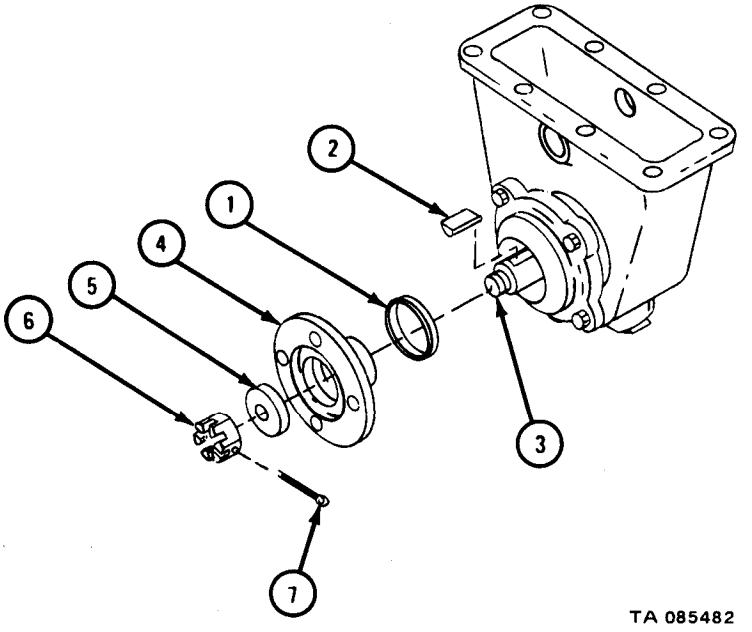

FRAME 5

1. Pack two ball bearings (1 and 2) with grease.
2. Press ball bearing (1) on bearing spacer (3).
3. Tap ball bearing (1) and bearing spacer (3) in main drive idler gear (4).
4. Press ball bearing (2) on other end of bearing spacer (3).

GO TO FRAME 6

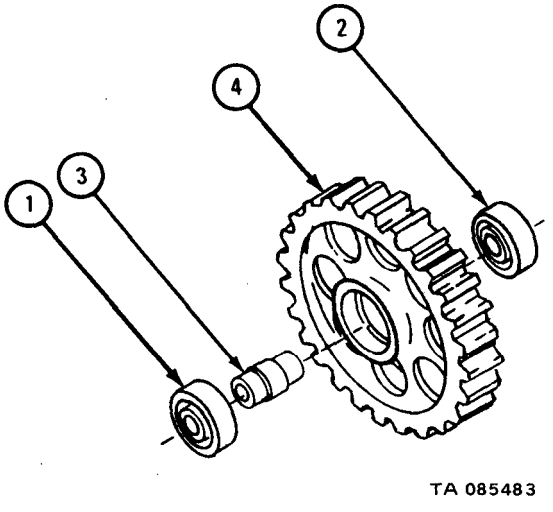

FRAME 6

1. Put two preformed packings (1) on grooves of main drive idler gear shaft (2).
2. Put main driver idler gear (3) into housing (4), meshing teeth of idler gear with teeth on main drive gear (5).
3. Put gear shaft (2) through housing (4) and idler gear (3).
4. Put on nut (6).
5. Put in cotter pin (7).

END OF TASK

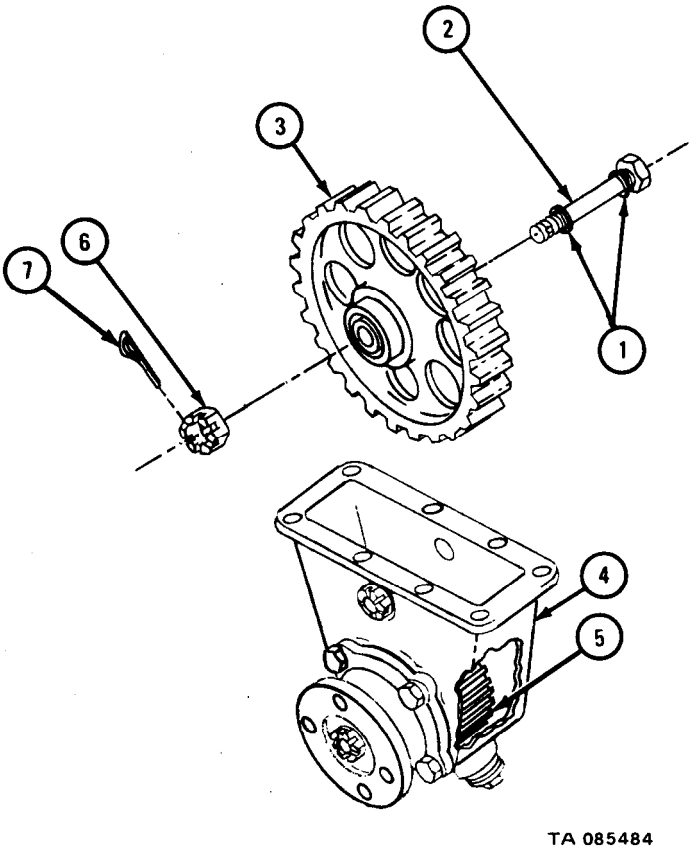

g. Replacement.

FRAME 1

Soldier A 1. Put gasket (1) on main drive idler gear housing (2).

2. Aline main drive idler gear housing (2) with clutch case (3) and hold it.

Soldier B 3. Put in eight screws (4) and nuts (5).

NOTE

Follow-on Maintenance Action Required:

1. Replace earth boring machine. Refer to para 17-45.
2. Fill main drive idler gear housing. Refer to LO 9-2320-209-12/1.

END OF TASK

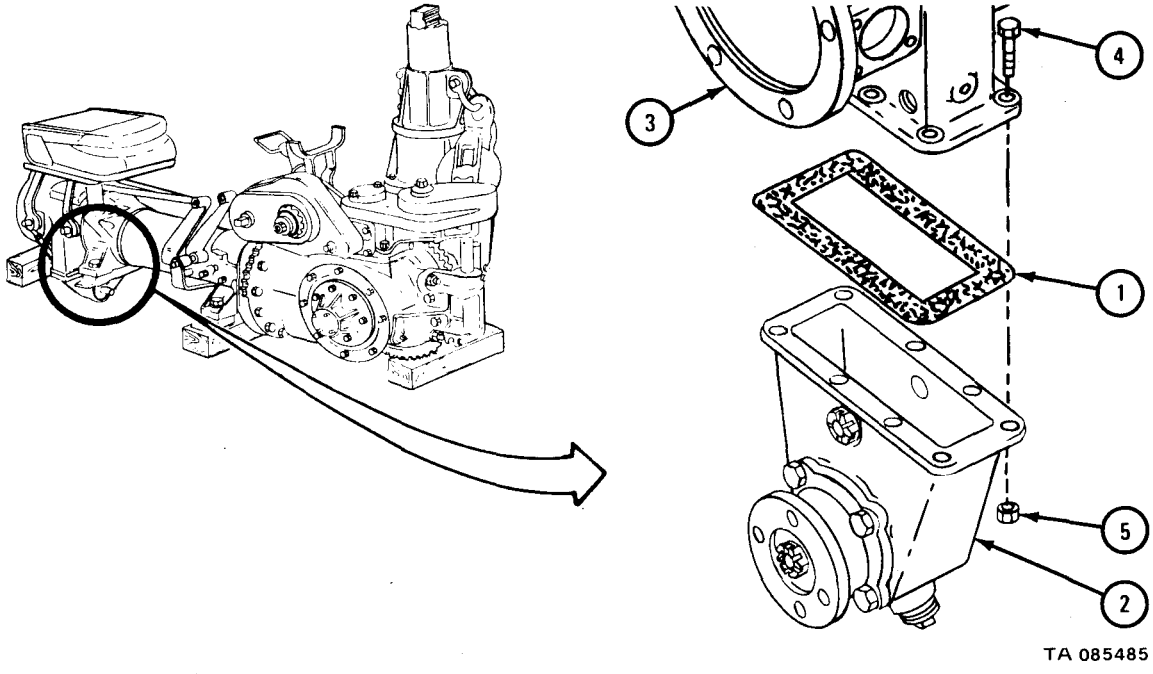

17-49. HORIZONTAL LEVELING WORM GEAR AND HOUSING ASSEMBLY REMOVAL, REPAIR, AND REPLACEMENT (TRUCK M764).

TOOLS: Worm adjusting bearing wrench, pn 11623222

SUPPLIES: Safety wire, 0.047-inch diameter
Solvent, dry cleaning, type II (SD-2), Fed. Spec P-D-680
Cotter pin (4)

PERSONNEL: One

EQUIPMENT CONDITION: Truck parked, engine off, handbrake set.

Preliminary Procedure. Remove horizontal leveling worm drive chains. Refer to TM 9-2320-209-20.

b. Removal.

WARNING

Before taking off horizontal leveling worm gear housing, put supports under intermediate case to stop intermediate case from turning. If case turns, fixtures which stick out could injure personnel or damage equipment.

FRAME 1

1. Put shifting handle (1) in center slot of bracket (2). Take off cotter pin (3) and nut (4). Throw away cotter pin.
2. Take off handle (1) with washer (5) and spring (6).
3. Take out three cotter pins (7), clevis pins (8), and two retaining links (9). Throw away cotter pins.
4. Take out shifting rod (10).

GO TO FRAME 2

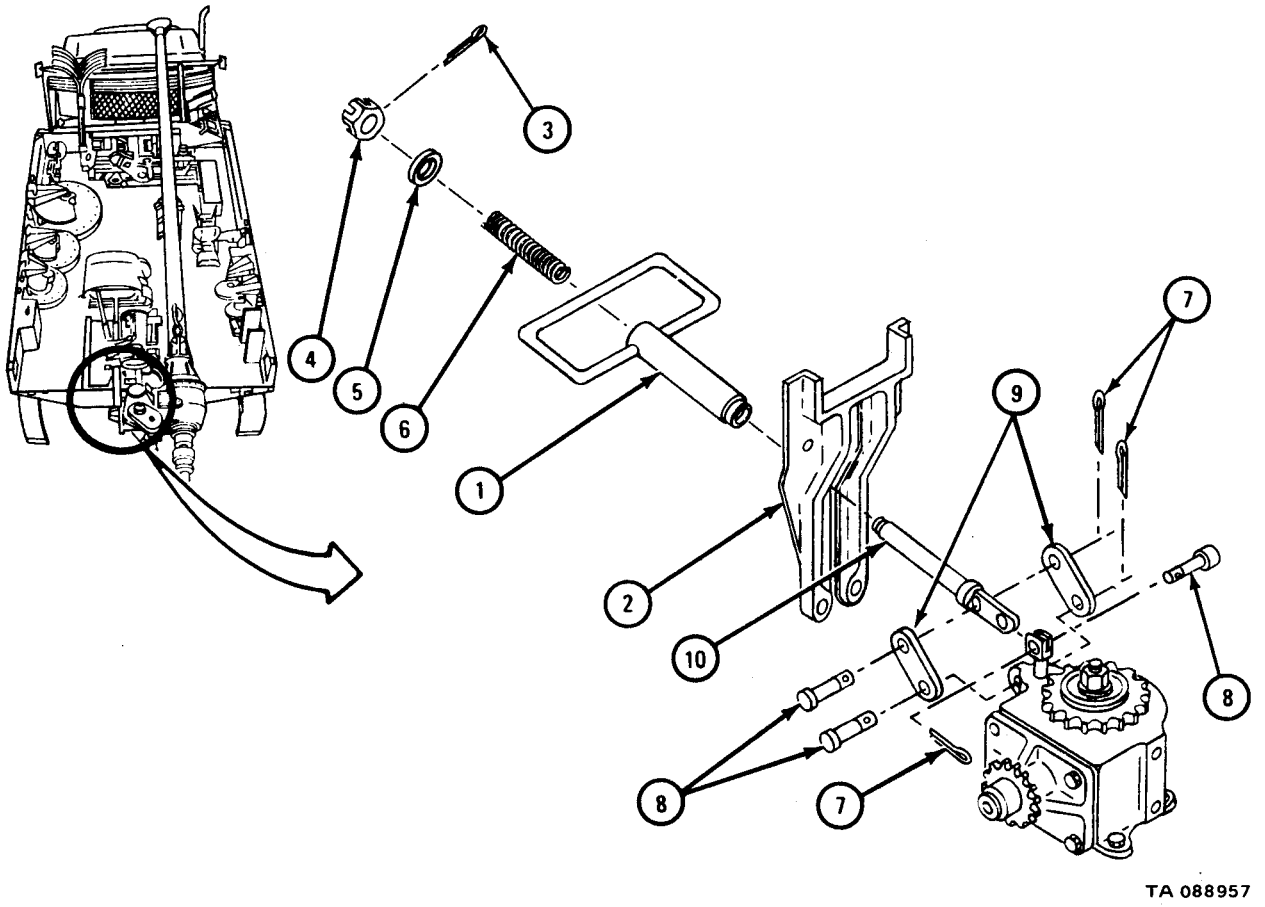

FRAME 2

1. Take out four screws (1) and lockwashers (2).
2. Take off bracket assembly (3).
3. Take off bracket shim set (4). Tie shims together in order and note thickness of shims.
4. Take out vent plug (5).
5. Take off and throw away two safety wires (6).
6. Take out two screws (7), bracket (8), and shim set (9). Tie shims together in order and note thickness of shims.

GO TO FRAME 3

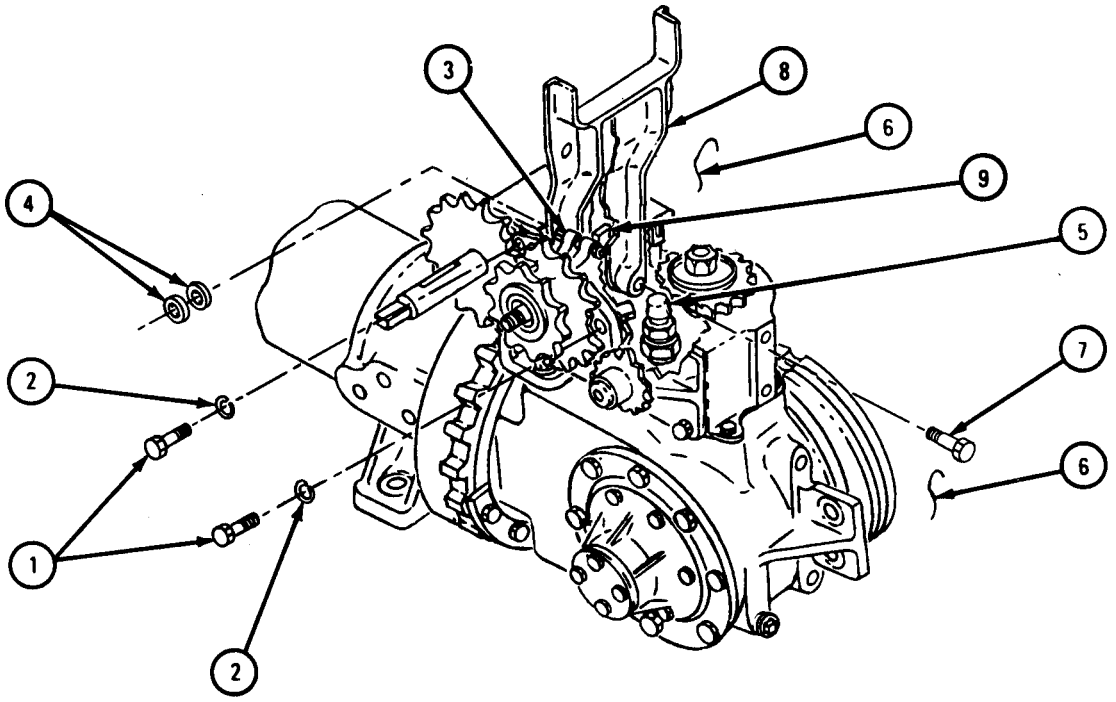

TA 088958

FRAME 3

1. Take out two safety wires (1).
2. Take off four nuts (2).
3. Lift off worm gear housing assembly (3).
4. Take off shims (4).

END OF TASK

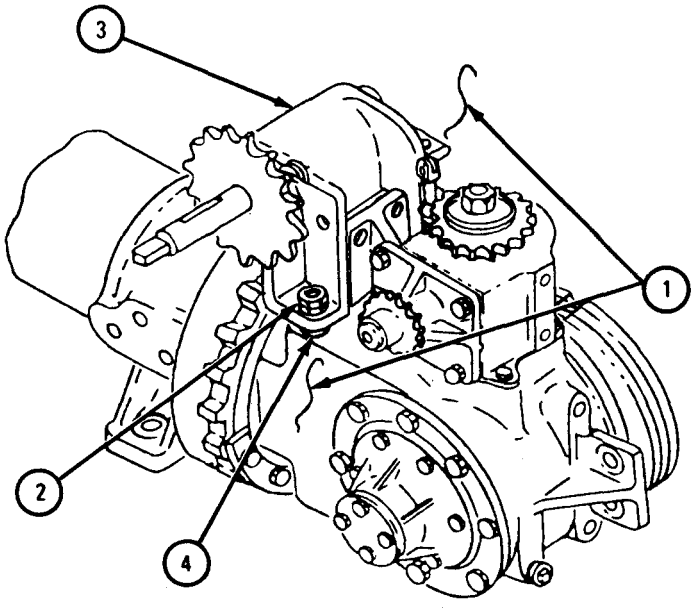

TA 088959

c. Disassembly.

FRAME 1

1. Take off safety wire (1).
2. Loosen setscrew (2) in sprocket (3).
3. Using puller, take sprocket (3) off worm gear shaft (4).
4. Take out key (5).

GO TO FRAME 2

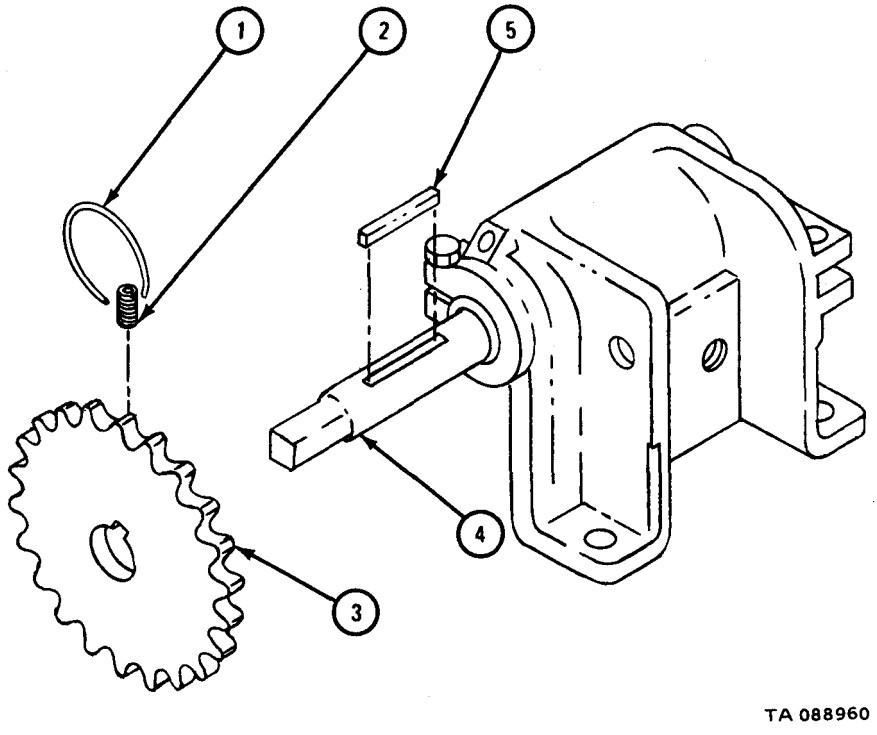

FRAME 2

1. Take off fitting (1) and reduce bushing (2).
2. Take out two screws (3), two lockwashers (4), and two setscrews (5).

GO TO FRAME 3

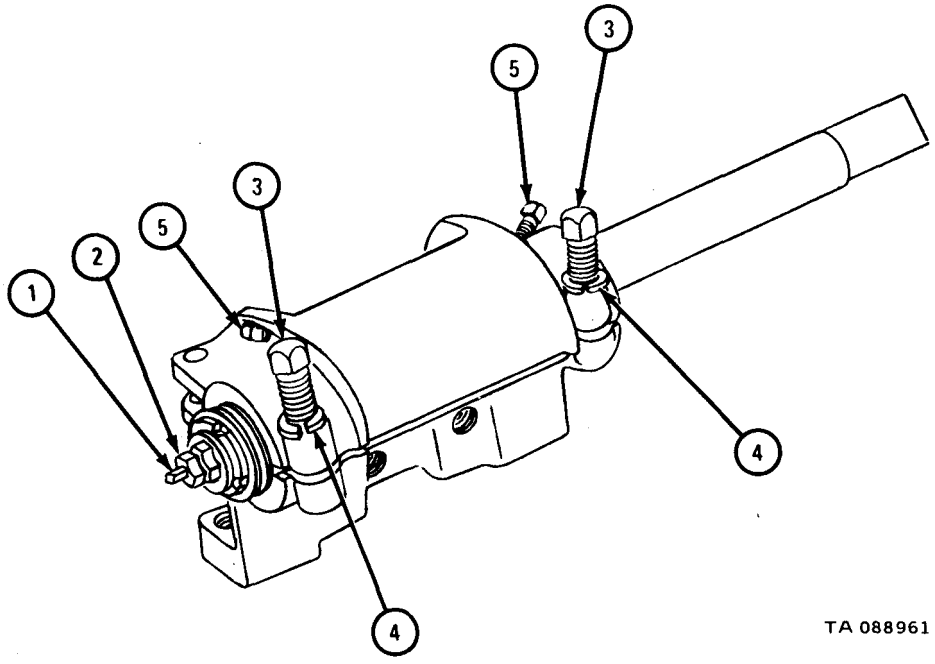

FRAME 3

1. Using worm adjusting bearing wrench, Ioosen worm adjusting nut (1).
2. Make sure keyway in worm thrust washer (2) is alined with key (3) in wormshaft (4).

NOTE

Note how far wormshaft (4) sticks out of housing so that it can be put back the same way,

3. Using soft drift and hammer, tap round end of shaft (4) and take out sleeve bearing (5) and shaft.
4. Take out key (3). Take off sleeve bearing (5).

GO TO FRAME 4

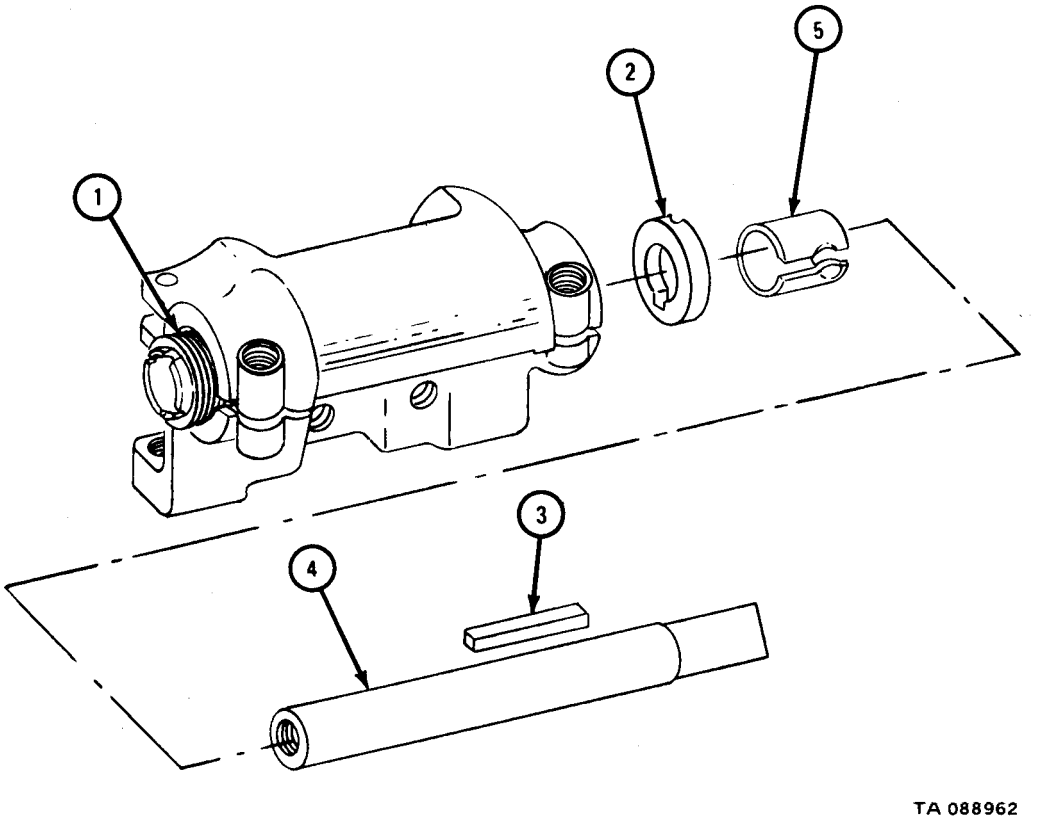

FRAME 4

1. Take out thrust washer (1).
2. Take out worm gear (2).
3. Take out adjusting bearing (3).

END OF TASK

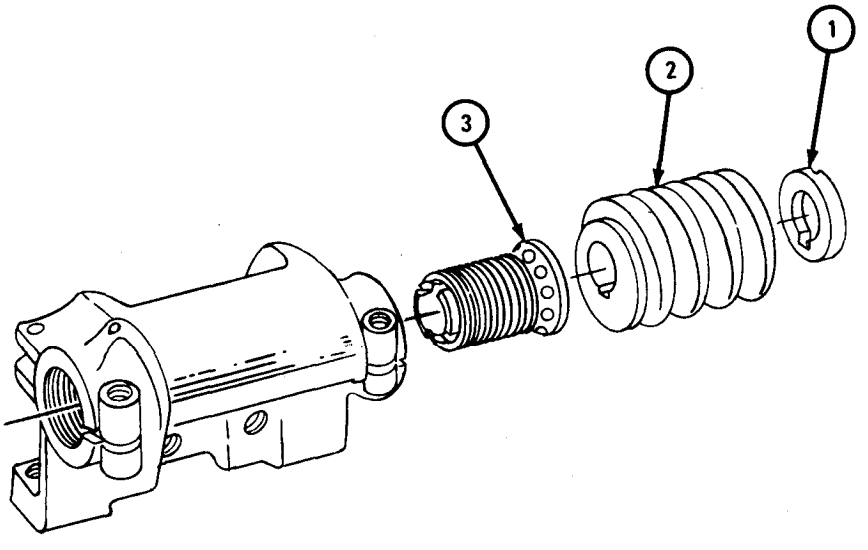

TA 088963

d. Cleaning. There are no special cleaning procedures needed. Refer to cleanlng proce ures given in Part 1, para 1-3.

e. Inspection.

FRAME 1

NOTE

Small chips, burrs or scratches on shafts, gears, and sprockets can be repaired. If parts are damaged in any other way, throw parts away and get new ones.

1. Check that leveling worm gear (1), second reduction chain sprocket (2), and shaft (3) have no chips, burrs or scratches.
2. Check that sprocket (2) and worm gear (1) have no chipped or broken teeth.
3. Check that shaft (3) is not bent.
4. Using magna flex, if available, check that worm gear (1), sprocket (2), and shaft (3) have no cracks.

GO TO FRAME 2

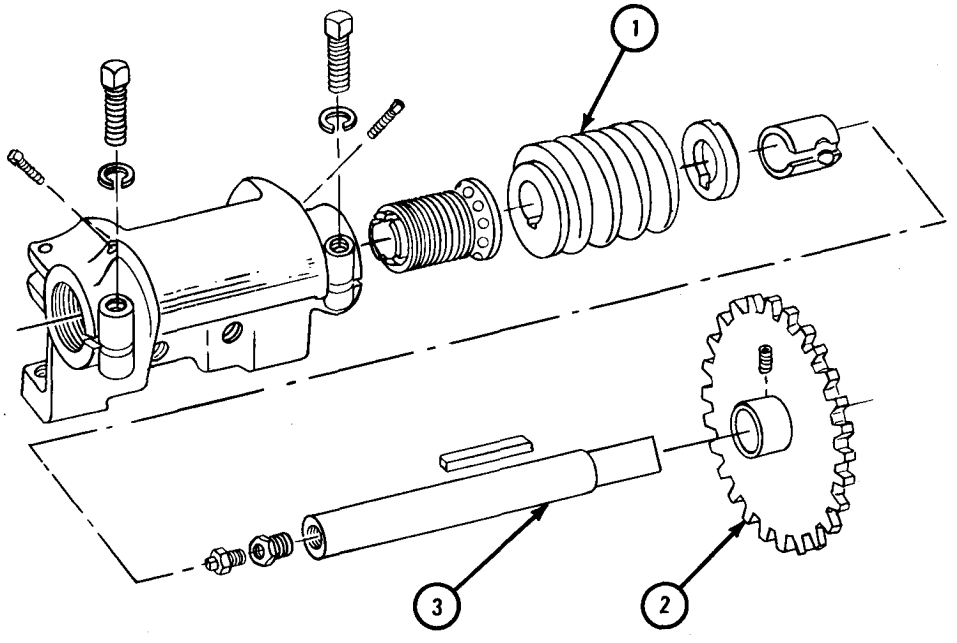

FRAME 2

NOTE

Small chips, burrs or scratches on adjusting bearing (1) sleeve bearing (2), and worm gear housing (3) can be repaired. If parts are damaged in any other way, throw parts away and get new ones.

1. Check that adjusting bearing (1), sleeve bearing (2), and worm gear housing (3) have no chips, burrs or scratches.
2. Check that threads in housing (3) and on screws are not stripped or crossthreaded.
3. Check that key (4) is not bent, crooked or damaged in any other way.

GO TO FRAME 3

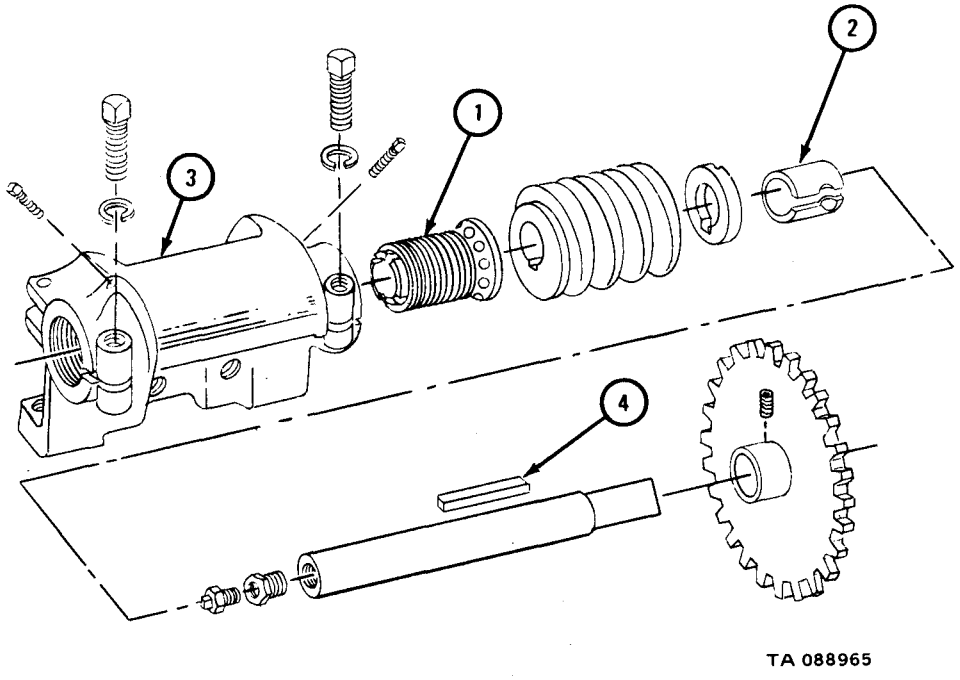

FRAME 3

NOTE

Readings must be within limits given in table 17-4. If readings are not within given limits, throw away part and get a new one.

1. Measure inside diameter of adjusting bearing (1).
2. Measure outside diameter of worm gear shaft (3).
3. Measure adjusting bearing length of adjusting bearing (1).
4. Measure inside diameter of sleeve bearing (3).
5. Measure thickness of thrust washer (4).
6. Measure fit of adjusting bearing (1) on shaft (2).
7. Measure fit of sleeve bearing (3) on shaft (2).

END OF TASK

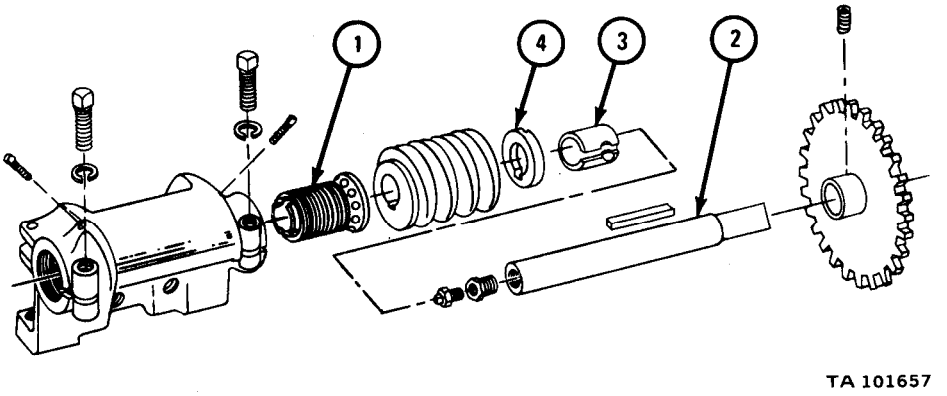

Table 17-4. Adjusting Bearing, Wormgear Shaft, and Thrust Washer Wear Limits

Index Number	Item/Point of Measurement	Size and Fit of New Parts (inches)	Wear Limit (inches)
1	Adjusting bearing inside diameter	1.376 to 1.378	1.581 to 1.383
1	Adjusting bearing length	2.875	None
2	Worm gear shaft outside diameter	1.371 to 1.372	1.366 to 1.367
3	Sleeve bearing inside diameter	1.376 to 1.378	1.381 to 1.383
4	Thrust washer thickness	0.406	0.374
1 and 2	Fit of adjusting bearing on shaft	0.0046 to 0.0072	None
2 and 3	Fit of sleeve bearing on shaft	0.0046 to 0.0072	None

f. Repair. This paragraph gives instructions to repair the horizontal leveling worm gear housing assembly.

(1) Smooth out any chips, scratches or burrs on gear shafts and gears with a honing stone.

(2) Weld cracks and small holes in housing and cover castings. Refer to TM 9-237.

(3) Drill out any bolts or studs broken off in tapped holes.

(4) Drill out threaded holes that are stripped or out-of-round to the next larger size and retap them. When putting together horizontal leveling worm gear and housing assembly, use a bolt or stud the size of the newly tapped hole.

g. Assembly.

FRAME 1

1. Loosely screw worm adjusting bearing (1) into place in housing (2) from inside of housing.
2. Put in leveling worm gear (3).
3. Put in thrust washer (4) with setscrew slot facing away from leveling worm gear (3). Aline keyway in thrust washer with keyway in leveling worm gear.

GO TO FRAME 2

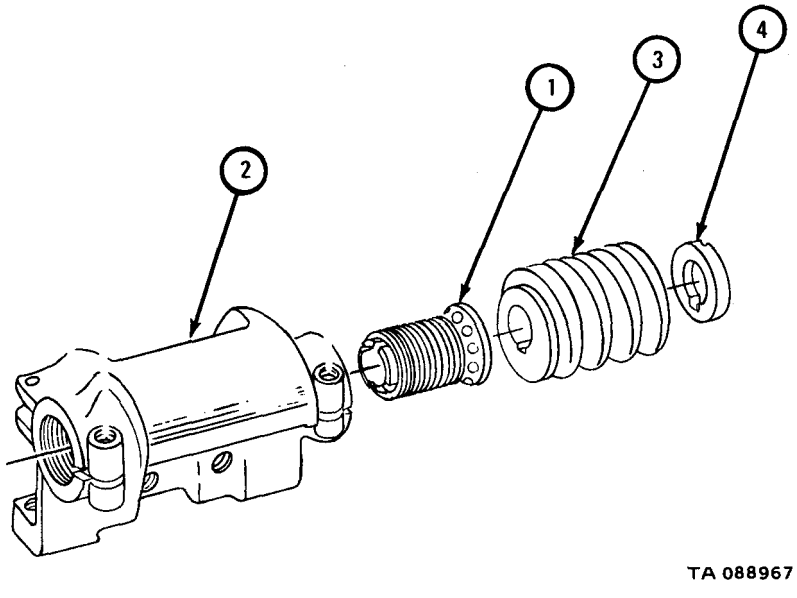

FRAME 2

1. Put key (l) in wormgear shaft (2). Aline key with keyway in thrust washer (3).

CAUTION

Key (1) in shaft (2) must clear thrust washer (3). Key must not bind adjusting bearing (4). Damage to equipment may result if needed clearance is not set up.

2. Tap shaft (2) through thrust washer end of housing, rounded end first. Set shaft so that square end sticks out the same distance as noted.
3. Finger tighten adjusting bearing (4).
4. Check clearance of key (1) by turning shaft (2). Shaft must turn freely.

GO TO FRAME 3

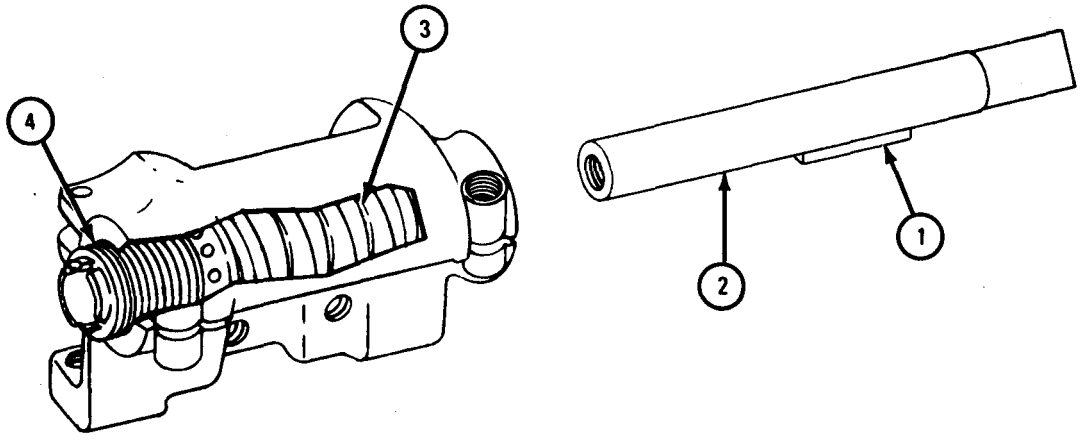

TA 101658

FRAME 3

1. Put sleeve bearing (1) over shaft (2) and into housing (3). Aline slot on sleeve bearing so that setscrew (4) will pass by slot.

CAUTION

Make sure that shaft(2) turns freely.

2. Put in two cap screws (5) and two lockwashers (6) to lock sleeve bearing (1) in place.

GO TO FRAME 4

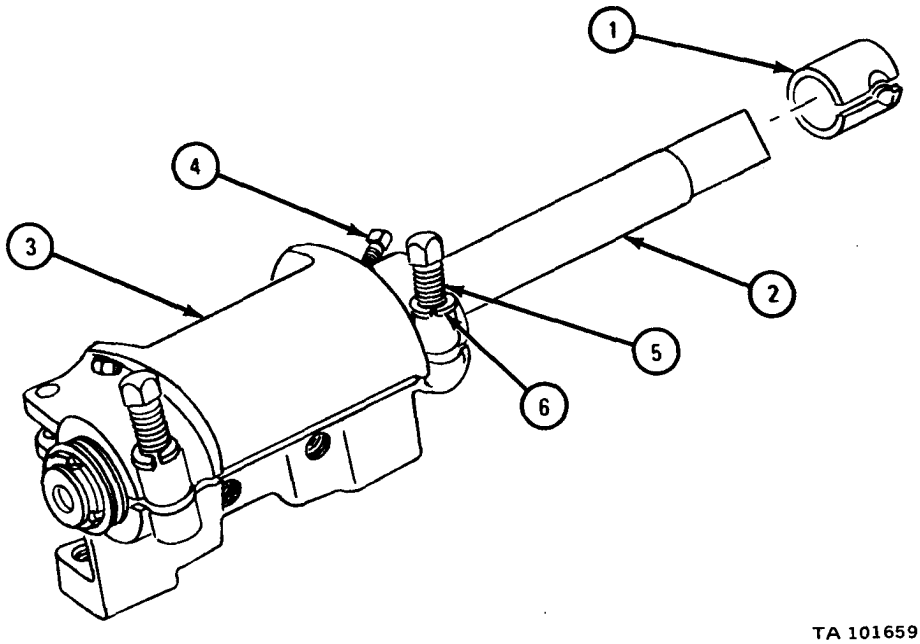

TA 101659

FRAME 4

1. Turn shaft (1) to make sure that setscrew(2) is not pushing thrust washer (3) against shaft.
2. Tighten setscrew (2) until it touches thrust washer (3), then unscrew it 1/4 turn.
3. Check that shaft (1) turns freely.

GO TO FRAME 5

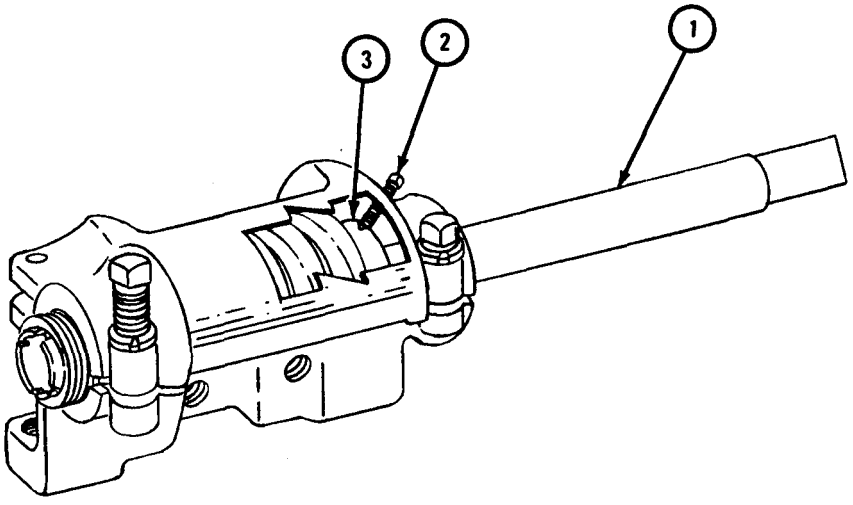

TA 101660

FRAME 5

CAUTION

Do not allow setscrew (1) to enter slot of adjusting bearing (3).

1. Put setscrew (1) into housing (2).
2. Using worm adjusting bearing wrench, turn adjusting bearing (3) until ends of shaft (4) do not move around.
3. Tighten setscrew (1) until it touches adjusting bearing (3). Back off setscrew 1/2 turn.
4. Using worm adjusting bearing wrench, back off adjusting bearing (3) until setscrew (1) is opposite the first indentation on adjusting bearing. Tighten setscrew until it touches adjusting bearing. Back off setscrew one turn.
5. Check that worm gear shaft (4) turns freely.

GO TO FRAME 6

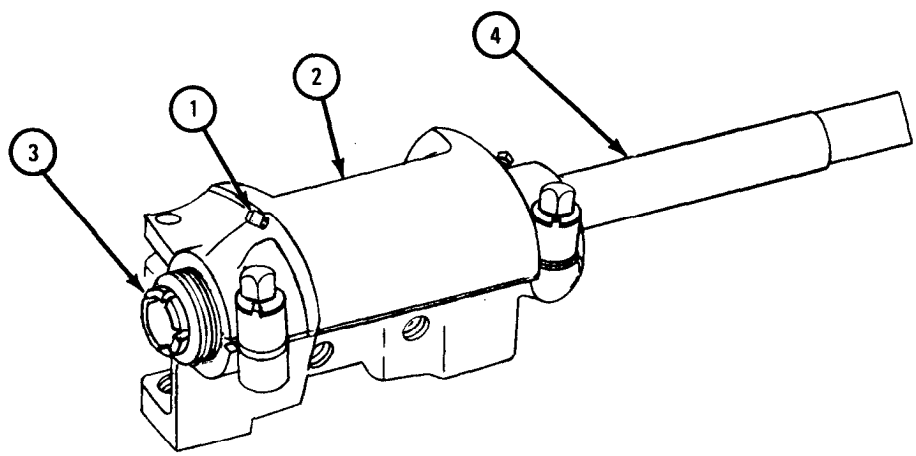

TA 088971

FRAME 6

1. Put bushing (1) into worm gear shaft (2). Put in lubrication fitting (3).

GO TO FRAME 7

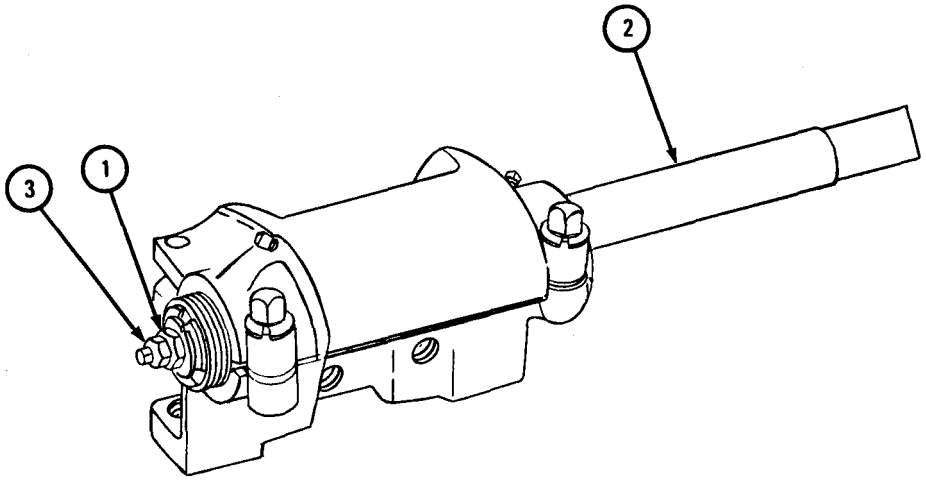

TA 101661

FRAME 7

1. Put key (1) in shaft (2).
2. Aline keyway in sprocket (3) with key (1).

NOTE

Make sure that shaft (2) does not move when tapping on sprocket (3).

3. Using brass hammer, tap sprocket (3) until setscrew hole in sprocket is alined with setscrew hole in shaft (2).
4. Tighten setscrew (4). Put on safety wire (5).

END OF TASK

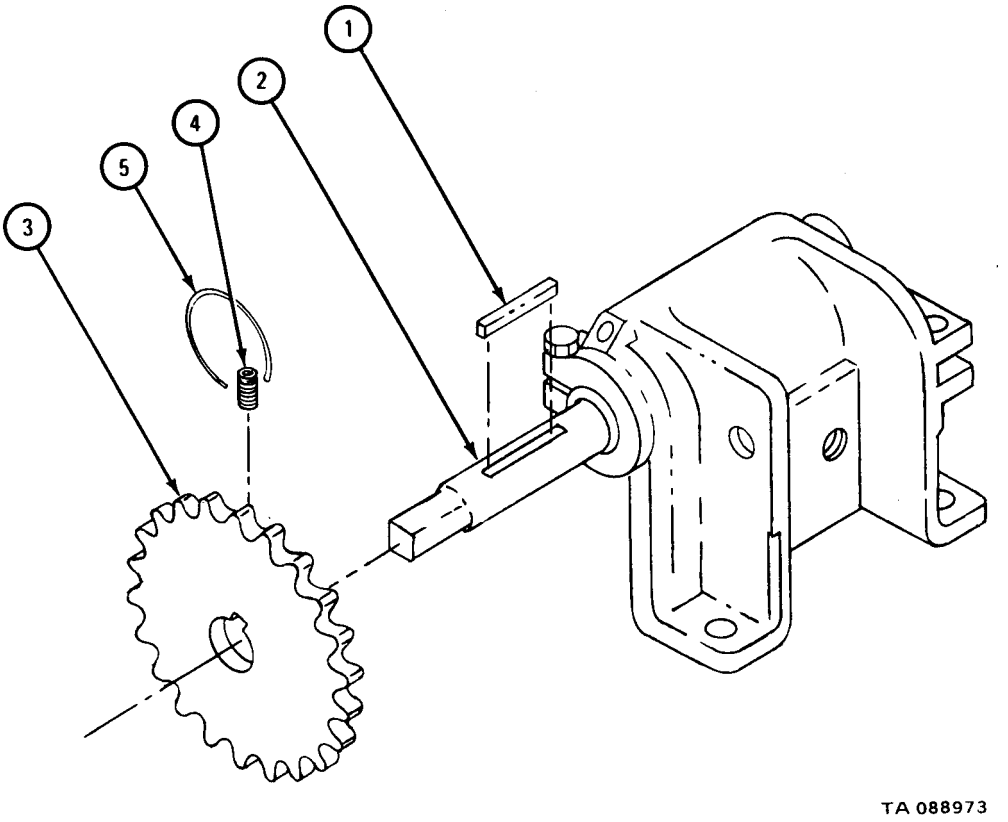

h. Replacement.

FRAME 1

NOTE

Make sure to put back shims (1) in the order and place noted.

1. Put on four shims (2).
2. Put on wormgear housing assembly (3).
3. Put shims (1) between mounting pad (4) and wormgear housing assembly (3).
4. Put on four nuts (5).

GO TO FRAME 2

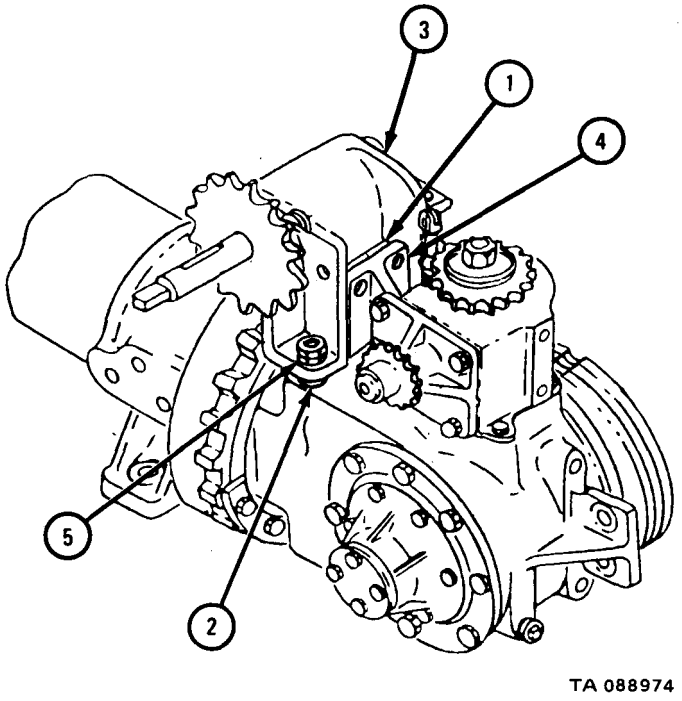

FRAME 2

1. Put on retaining bracket (1).
2. Put two cap screws (2) through bracket (1). Make sure capscrews pass through shims (3).
3. Put on bracket assembly (4).
4. Put on two screws (5) with lockwashers (6) and shim set (7) as noted.

GO TO FRAME 3

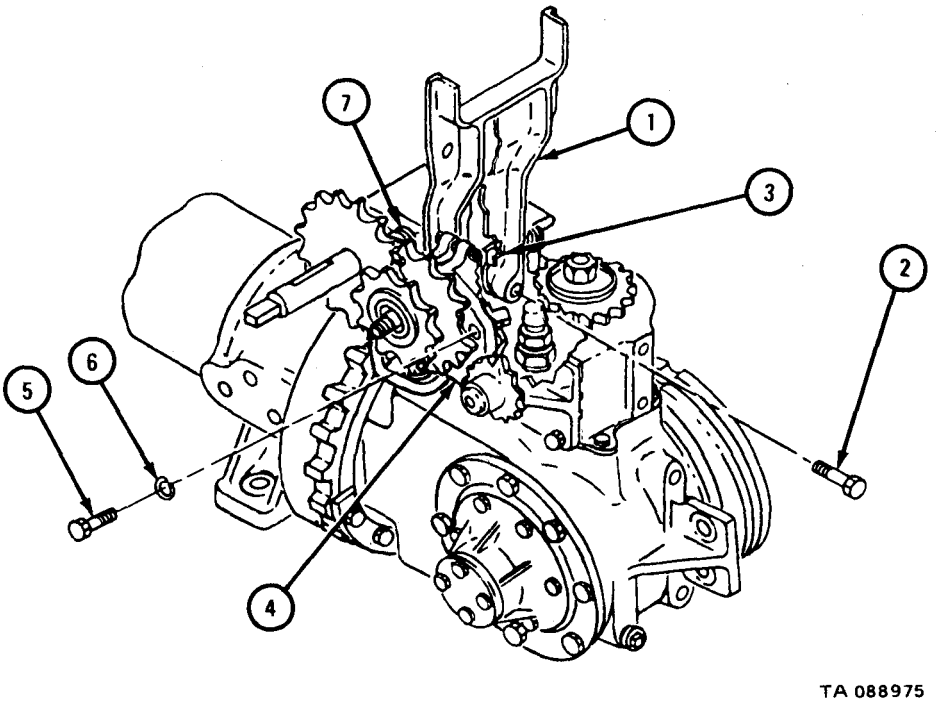

FRAME 3

1. Turn wormgear shaft (1) until worm wheel (2) meshes with wormgear in wormgear assembly housing (3).
2. Facing end of worm gear assembly housing (3), check that worm gear in wormgear assembly housing is centered over worm wheel (2). If wormgear is not centered, take out two screws (4) and add or take off a shim (5) until wormgear is centered. Put in two screws.
3. Check that ends of worm gear shaft (1) have no play in them. If ends of shaft have play, set worm adjusting bearing. Refer to para 17-49g.

GO TO FRAME 4

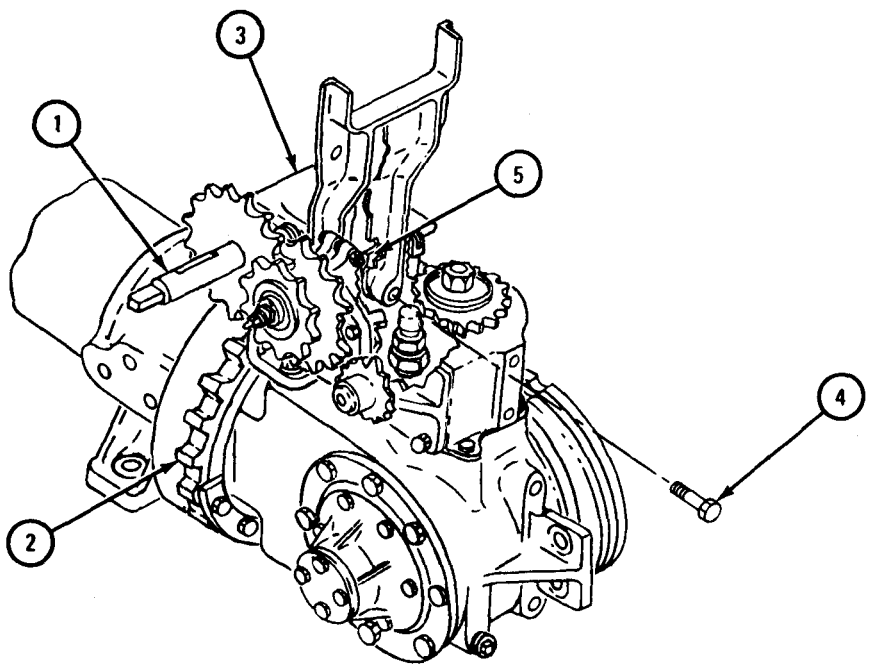

TA 088976

FRAME 4

NOTE

Backlash between wormgear and worm wheel should be as small as possible without making it too hard to turn worm wheel.

1. Turn wormgear shaft (1) to check basklash. If backlash is too much, take off worm gear housing (2). Refer to para 17-49b. Add or take off shims (3) until backlash is set correctly.
2. Put two safety wires (4) between housing mounting stud (5) and two setscrews (6).
3. Put two safety wires (7) on two capscrews (8).

GO TO FRAME 5

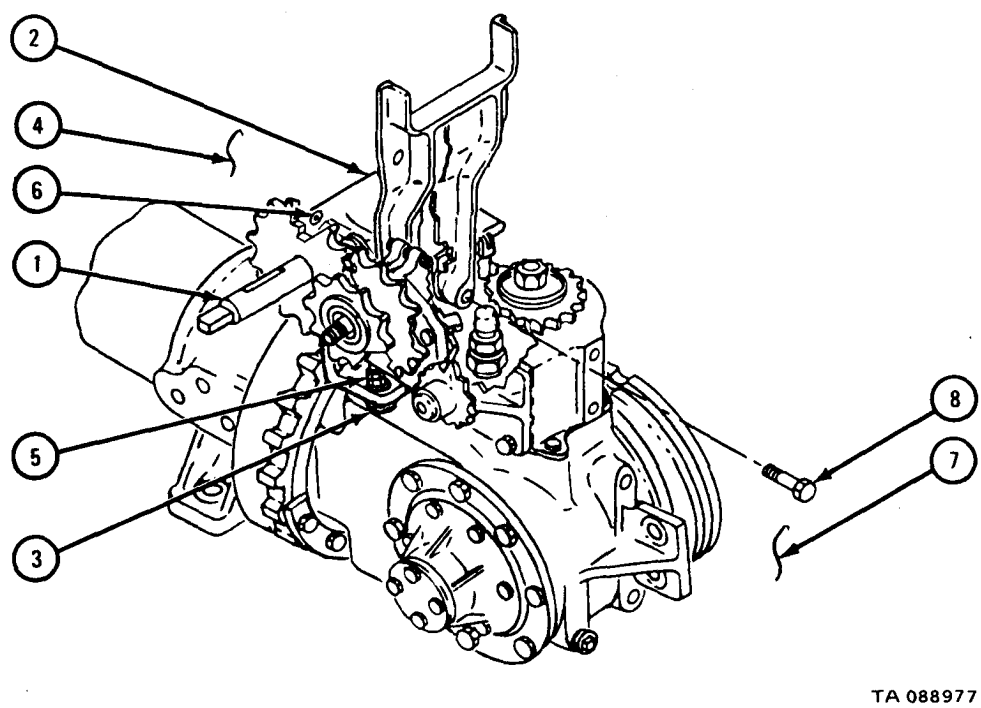

FRAME 5

1. Put shifting rod (1) into center slot of bracket (2).
2. Aline two retaining links (3) and put in three clevis pins (4). Put in three cotter pins (5).
3. Put handle (6) on shifting rod (1).
4. Put spring (7) and washer (8) on shifting rod (1) through handle (6).
5. Put nut (9) on end of shifting rod (1) and put in cotter pin (10).

NOTE

Follow-on Maintenance Action Required:

Replace horizontal leveling worm drive chains. Refer to TM 9-2320-209-20.

END OF TASK

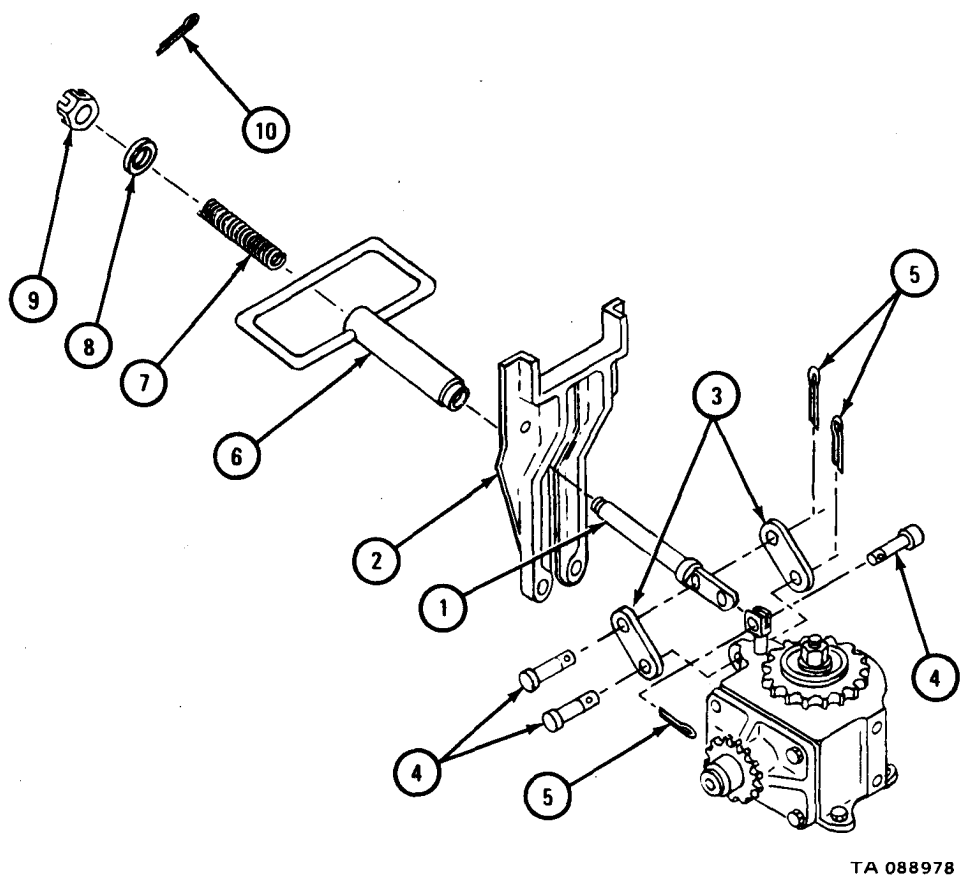

17-50. VERTICAL LEVELING WORM GEAR AND HOUSING REMOVAL, REPAIR, REPLACEMENT, AND ADJUSTMENT (TRUCK M764).

TOOLS: No special tools required

SUPPLIES: Safety wire, 0.047 inch diameter
Artillery and automotive grease, type GAA, MIL-G-10924
Lubricating oil, ICE, OE /HDO 10, MIL-L-2104
Solvent, dry cleaning, type II (SD-2), Fed. Spec PD-680

PERSONNEL: One

EQUIPMENT CONDITION: Truck parked, engine off, handbrake set.

Preliminary Procedure. Remove vertical leveling worm drive chains. Refer to TM 9-2320-209-20.

b. Removal.

FRAME 1

1. Take off and throw away safety wire (1).
2. Loosen setscrew (2) in second reduction drive chain sprocket (3) three turns.
3. Pull off second reduction drive chain sprocket (3) from vertical leveling worm gear shaft (4).
4. Take out sprocket retaining key (5) from vertical worm gear shaft (4).
5. Loosen screw (6) three turns.
6. Pull chain tightening shaft assembly (7) out of bracket (8).

GO TO FRAME 2

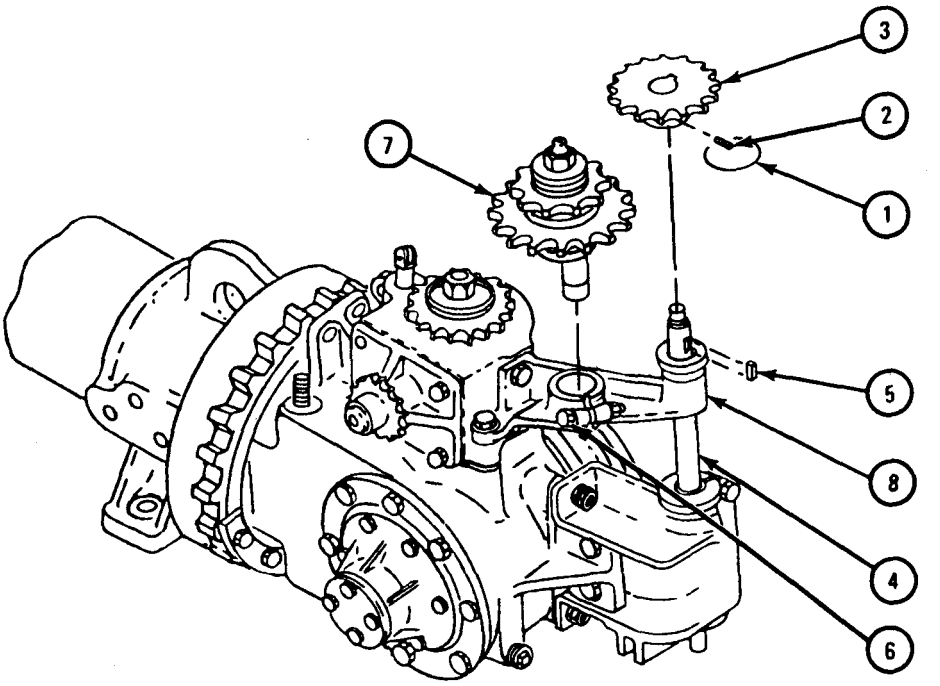

FRAME 2

NOTE

Be careful not to lose shim sets. Note thickness of shims in each shim set so that the same thickness is put back.

1. Take off and throw away safety wire (1).
2. Take off two screws (2), lockwashers (3), and shim set (4).
3. Take off two screws (5) and lockwashers (6).
4. Take off two screws (7), two lockwashers (8), two washers (9), and two shim sets (10).

GO TO FRAME 3

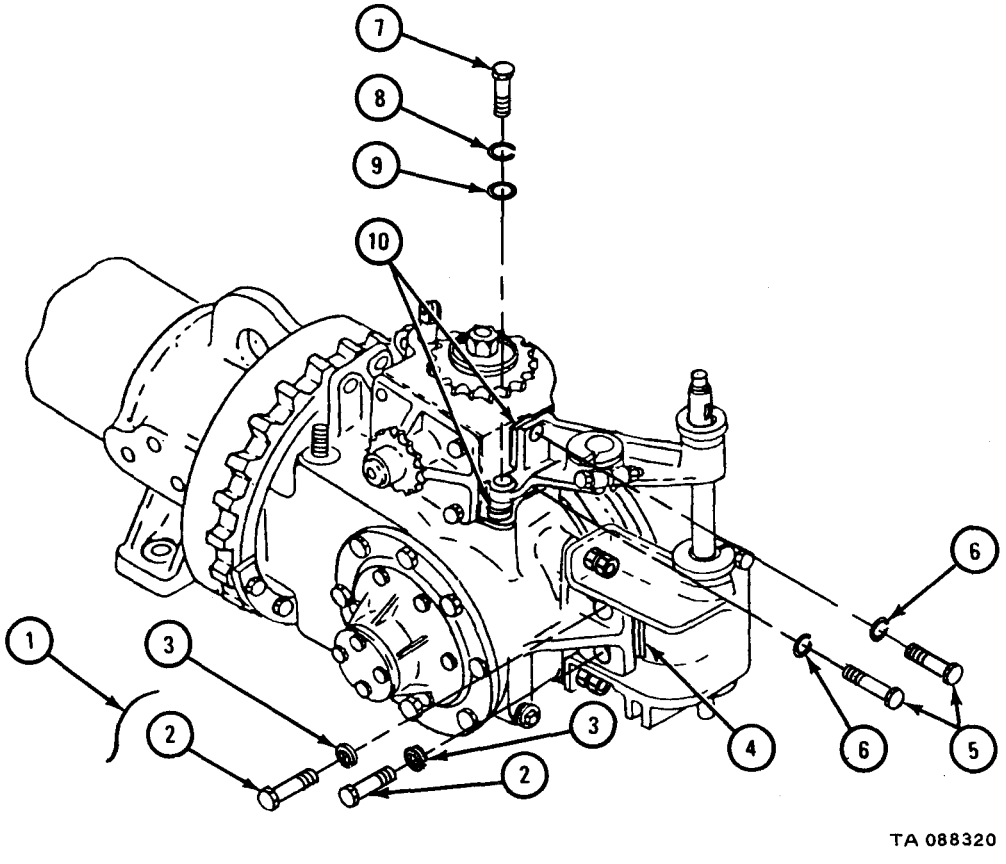

FRAME 3

WARNING

Be sure that derrick tube is in cradle and that rack carrier nut is braced to keep boring case from turning when worm gear housing is taken off. This will avoid injury to personnel and damage to equipment.

1. Take off bracket (1).
2. Take off four nuts (2).
3. Take off vertical leveling worm gear drive housing (3).

NOTE

Note thickness of shim sets so that same thickness is put back.

4. Take off two shim sets (4).

END OF TASK

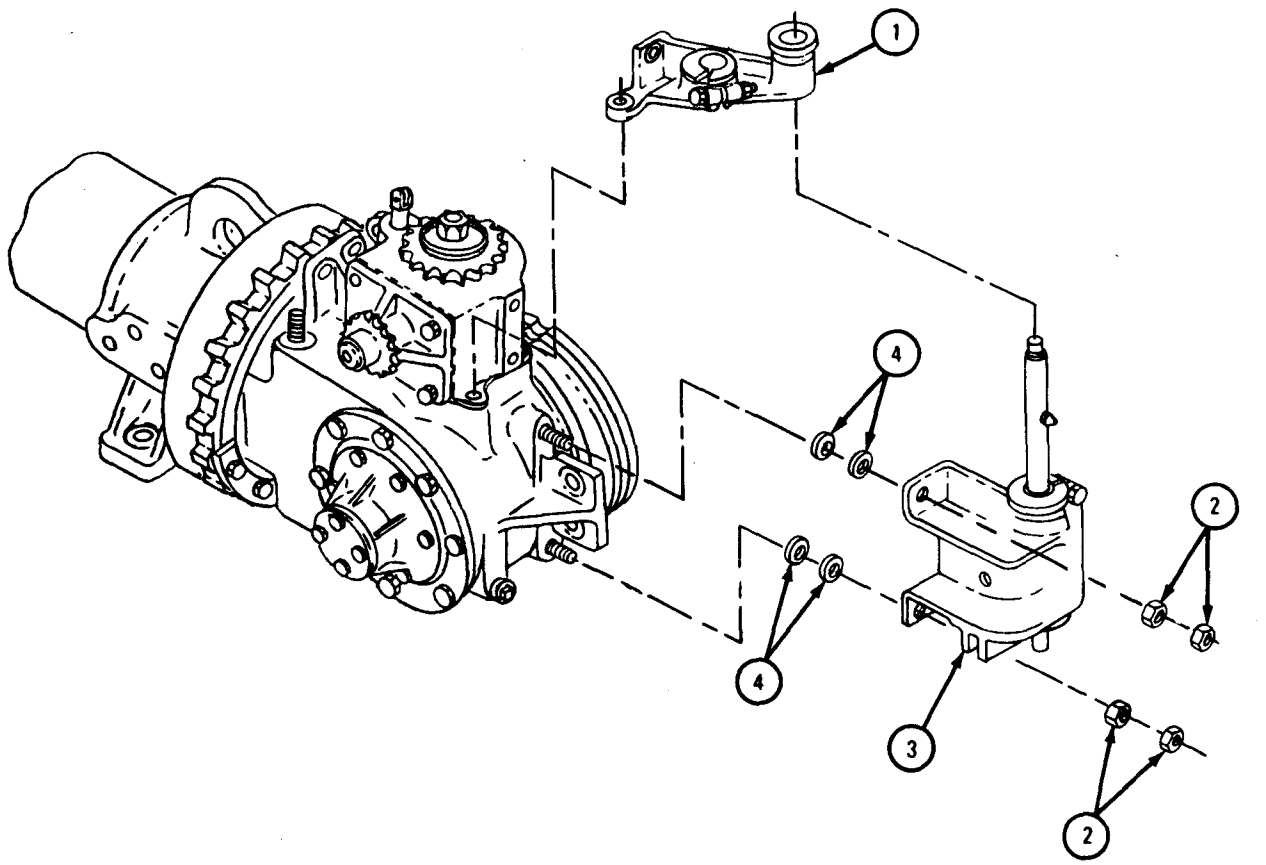

c. Disassembly.

FRAME 1

1. Take out lubricating fitting (1) from worm gear shaft (2).
2. Take out capscrews (3) and washers (4).
3. Take out two setscrews (5).
4. Take out lubrication fitting (6).
5. Using worm adjusting bearing wrench, loosen worm adjusting nut (7).

GO TO FRAME 2

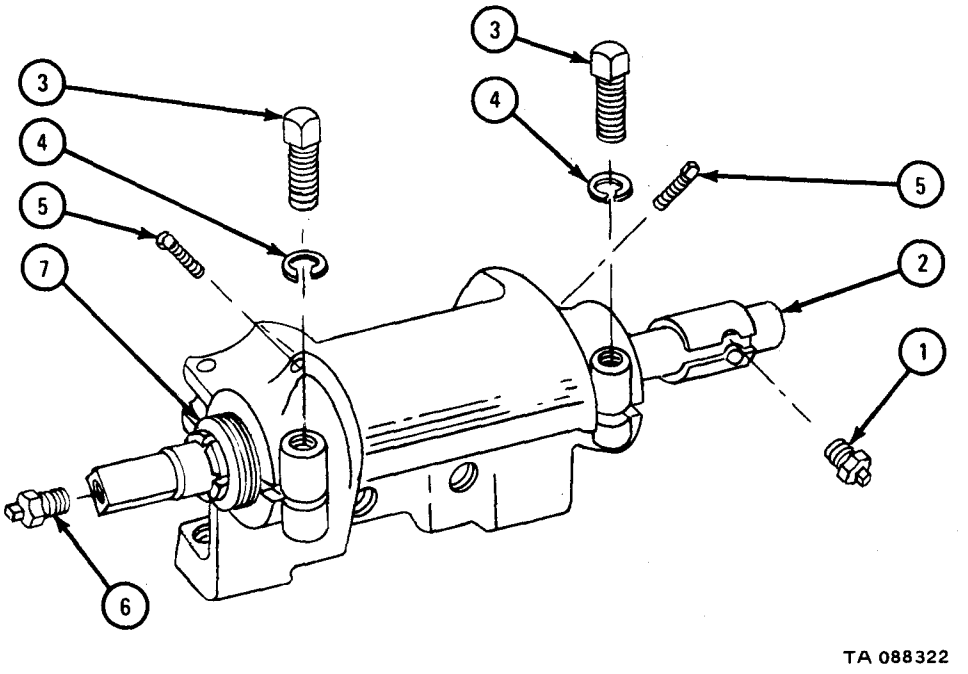

FRAME 2

NOTE

Note distance that worm shaft (1) extends out of end of housing (2). This will help to put worm shaft back in the same place.

1. With keyway in worm thrust washer (3) alined with key (4) in worm shaft (1), tap worm gear (5) end of worm shaft and take worm shaft assembly out of housing (2).
2. Take off worm adjusting bearing (6), worm gear (5), thrust washer (3), key (4), and sleeve bearing (7).

GO TO FRAME 3

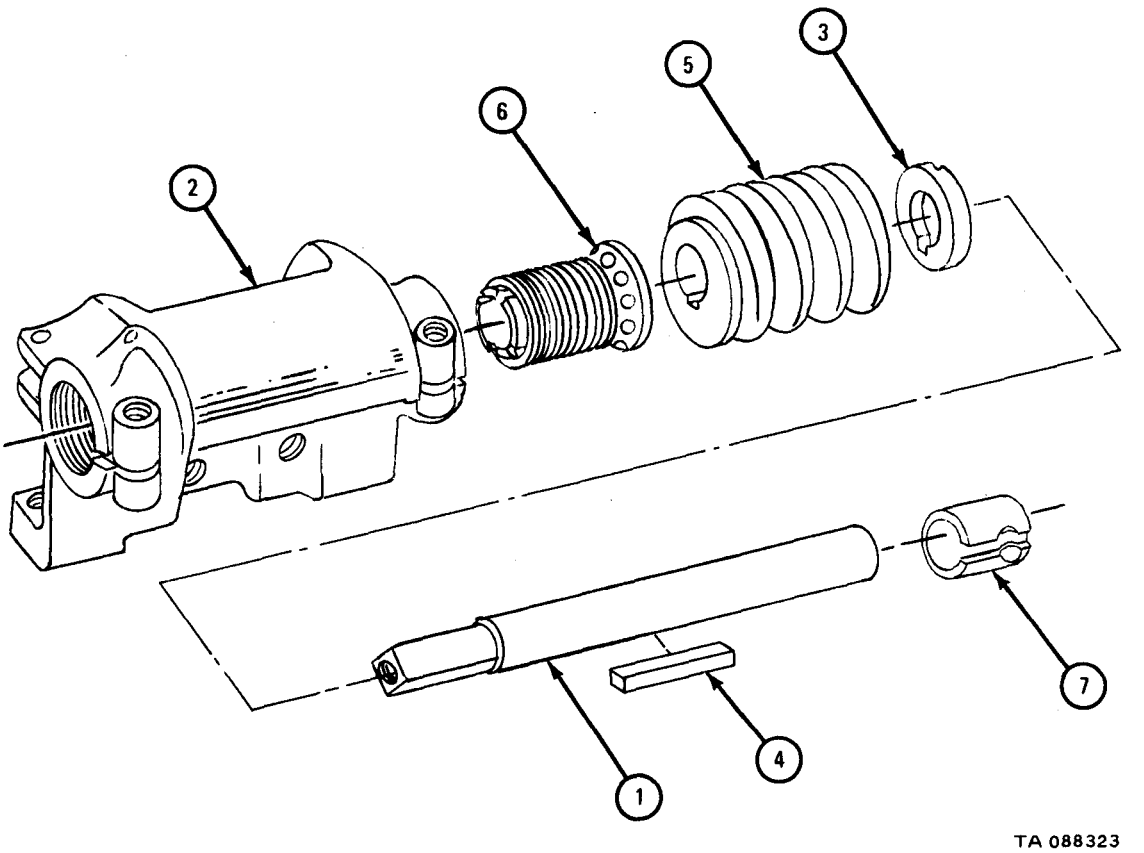

FRAME 3

1. Holding shaft (1) take off lubrication fitting (2), nut (3), and lockwasher (4).
2. Take off disk (5), spring (6), and disk (7).
3. Take off sprocket assembly (8) and take out key (9).

GO TO FRAME 4

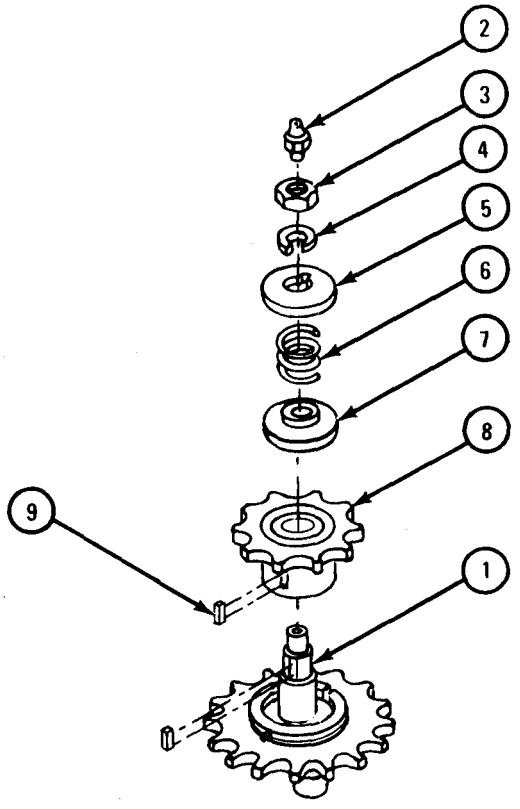

TA 088324

FRAME 4

1. Take off and throw away safety wire (1).
2. Loosen setscrew (2) three turns.
3. Take off first reduction drive chain sprocket (3).
4. Take key (4) out of shaft (5).

END OF TASK

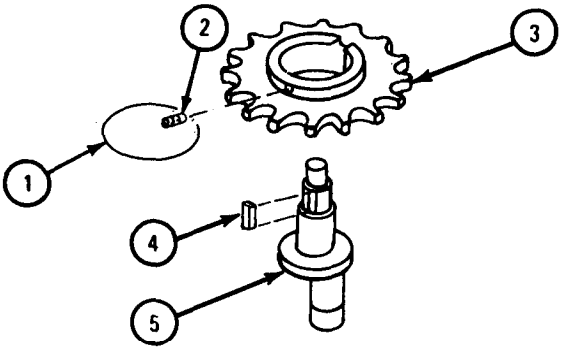

TA 088325

d. Cleaning. There are no special cleaning procedures needed. Refer to cleaning procedures given in Part 1, para 1-3.

NOTE

Clean all parts before inspection and before assembly.

Inspection and Repair.

FRAME 1

NOTE

Readings must be within limits given in table 17-5. If readings are not within given limits, throw away part and get a new one.

1. Measure fit of adjusting bearing (1) of worm gear shaft (2).
2. Measure length of adjusting bearing (1).
3. Measure fit of sleeve bearing (3) on shaft (2).
4. Measure thickness of thrust washer (4).

GO TO FRAME 2

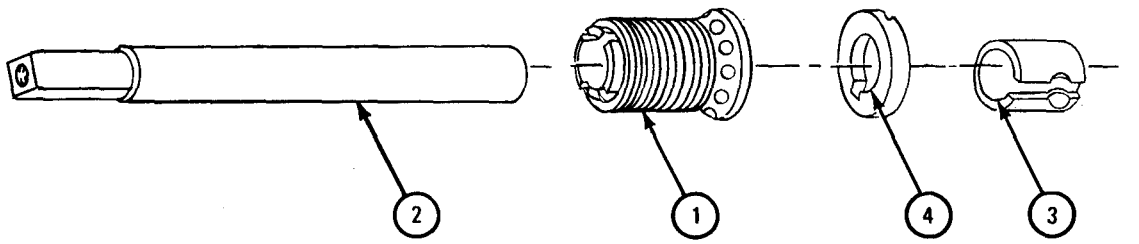

NOTE: PARTS WITHOUT CALLOUTS ARE SHOWN ONLY FOR REFERENCE PURPOSES.

TA 088326

Table 17-5. Leveling Worm gear Assemblies Wear Limits

Index Number	Item /Point of Measurement	Size and Fit of New Parts (inches)	Wear Limit (inches)
1 and 2	Fit of bearing on shaft	0.004 to 0.007	None
1	Adjusting bearing length	2.875	2.845
3 and 2	Fit of sleeve bearing on shaft	0.004 to 0.007	None
4	Thrust washer thickness	0.406	0.374

FRAME 2

NOTE

Readings must be within limits given in table 17-6. If readings are not within given limits, throw away part and get a new one.

1. Measure fit of bearing (1) on shaft (2).

GO TO FRAME 3

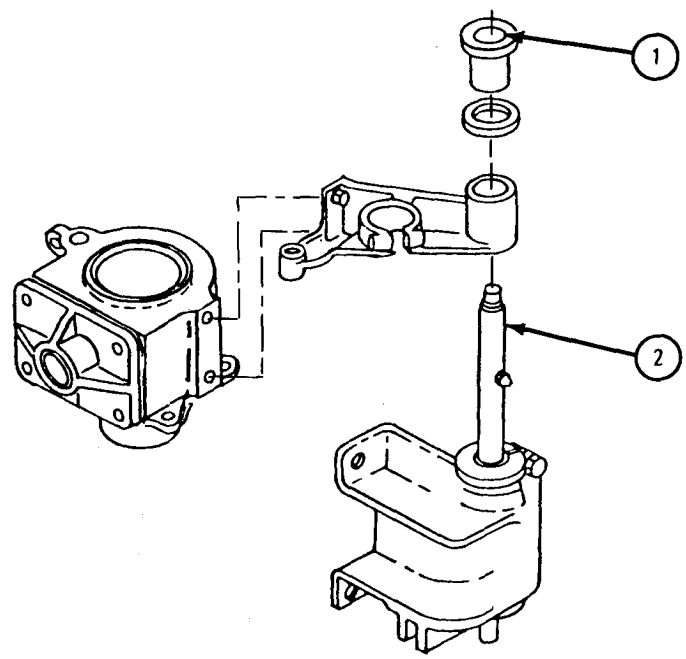

NOTE: PARTS WITHOUT CALLOUTS ARE SHOWN ONLY FOR REFERENCE PURPOSES.

TA 088327

Table 17-6. Power Leveler Assembly Wear Limits

Index Number	Item /Point of Measurement	Size and Fit of New Parts (inches)	Wear Limit (inches)
1 and 2	Fit of bearing on shaft	0.001 to 0.005	None

FRAME 3

1. Check that leveling worm gear (1), second reduction chain sprocket (2), first reduction chain sprocket wheel (3), and second reduction chain sprocket wheel (4) have no galling, pitting, burrs or cracks.
2. Fix small nicks, scores or burrs with a hone.
3. Get new gears for gears with chipped or broken teeth.
4. Check that housing (5) and bracket (6) have no nicks, scores or burrs. Fix small nicks, burrs and scores with a hone.
5. If parts need more repair, get new ones in their place.

GO TO FRAME 4

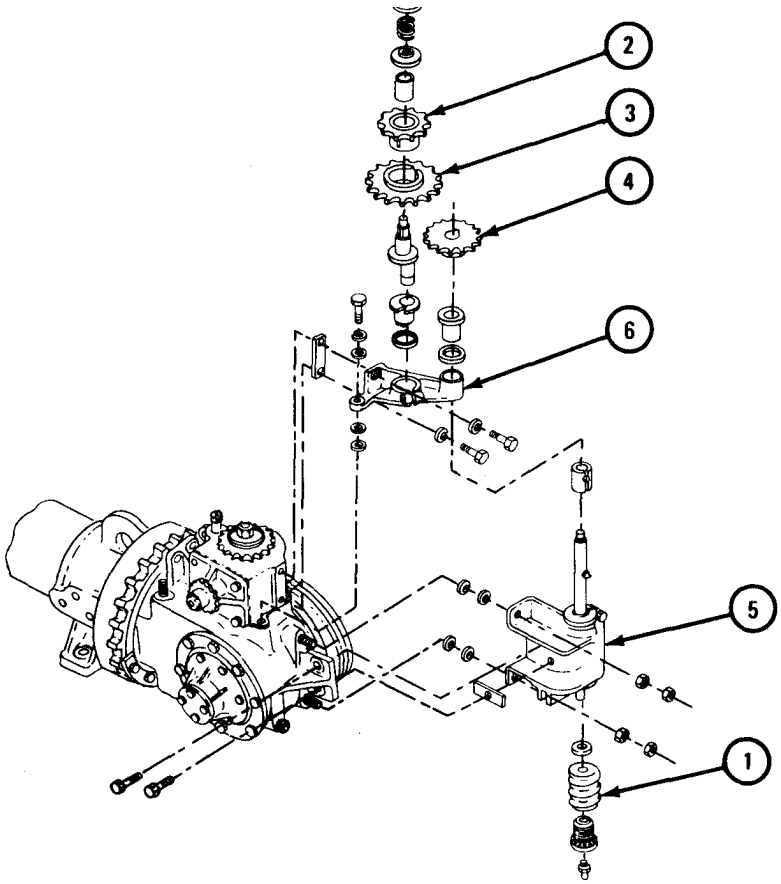

NOTE: CHECK ONLY THOSE PARTS WHICH ARE CALLED OUT IN THIS FRAME. PARTS WITHOUT CALLOUTS ARE SHOWN ONLY FOR REFERENCE PURPOSES OR ARE CHECKED IN ANOTHER FRAME.

TA 088328

FRAME 4

1. Check that sleeve bearing (1) in the second reduction drive chain sprocket (2), eccentric bushing (3), and chain tightening bearing (4) in bracket (5) are not worn or damaged.

IF BEARINGS OR BUSHING ARE DAMAGED, GO TO FRAME 5.
IF BEARINGS OR BUSHING ARE NOT DAMAGED, END OF TASK

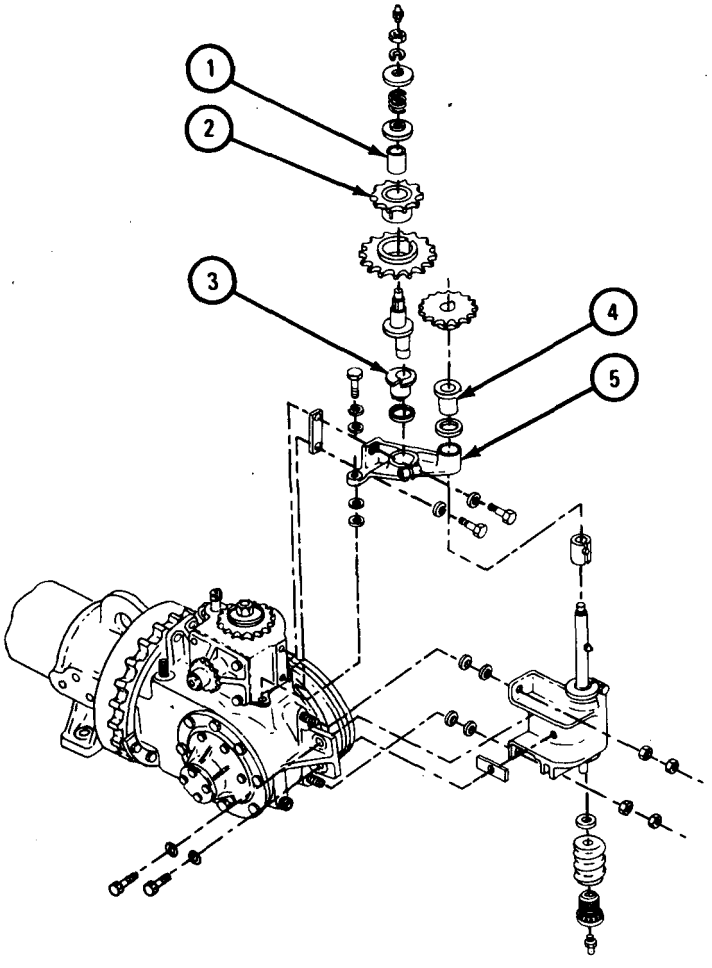

NOTE: PARTS WITHOUT CALLOUTS ARE SHOWN ONLY FOR REFERENCE PURPOSES.

TA 088329

FRAME 5

1. Take off screw (1), nut (2), and lockwasher (3).
2. Take out eccentric bushing (4) and bushing spacer (5) from bracket (6).
3. Press bearing (7) from bracket (6). Take out bearing spacer (8).
4. Press sleeve bearing (9) out of second reduction chain sprocket (10).
5. Throw away worn or damaged bushing (4) or bearings (7 and 9) and get a new one.

END OF TASK

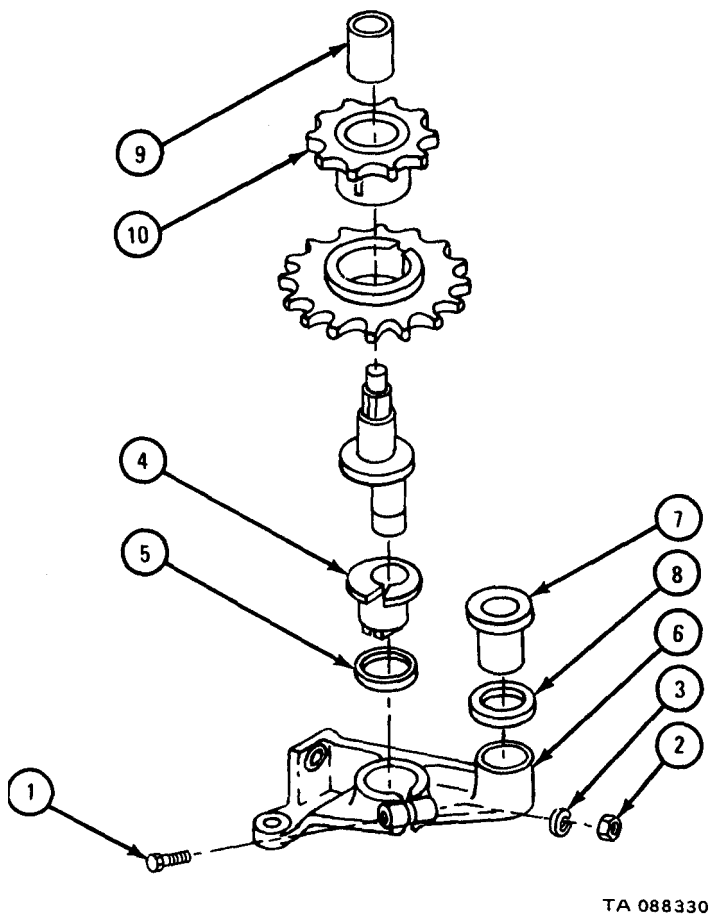

f. Assembly.

FRAME 1

1. Put key (1) in shaft (2).
2. Put on first reduction drive chain sprocket (3).
3. Tighten setscrew (4) and put on safety wire (5).
4. If sleeve bearing (6) was taken out, press sleeve bearing into second reduction drive chain sprocket (7).
5. Put key (8) into second reduction drive chain sprocket (7).
6. Aline key (8) in second reduction drive chain sprocket (7) with keyway in first reduction drive chain sprocket (3) and put sprocket (7) into sprocket (3) on shaft (2).

GO TO FRAME 2

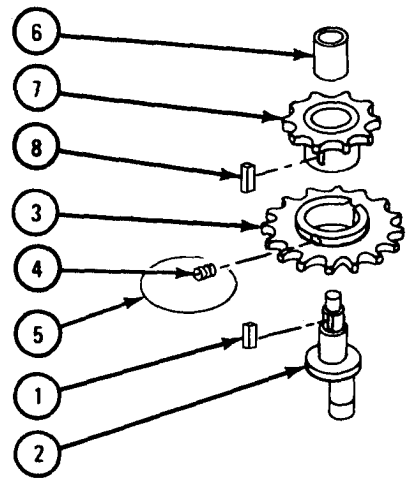

TA 088331

FRAME 2

1. Put disk (1), spring (2), disk (3), and lockwasher (4) on shaft (5).
2. Holding shaft (5), put on nut (6).
3. Put in lubrication fitting (7).

IF SHAFT BRACKET BEARING AND ECCENTRIC BUSHING WERE TAKEN OUT, GO TO FRAME 3.
IF SHAFT BRACKET BEARING AND ECCENTRIC BUSHING WERE NOT TAKEN OUT, GO TO FRAME 4

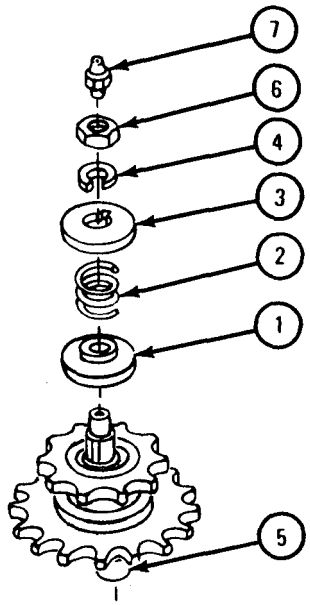

TA 088332

FRAME 3

1. Put bearing spacer (1) on bracket (2) and press in bearing (3).
2. Put bearing spacer (4) and eccentric bushing (5) into bracket (2).
3. Put screw (6) into bracket (2) and put on lockwasher (7) and nut (8), but do not tighten nut.

GO TO FRAME 4

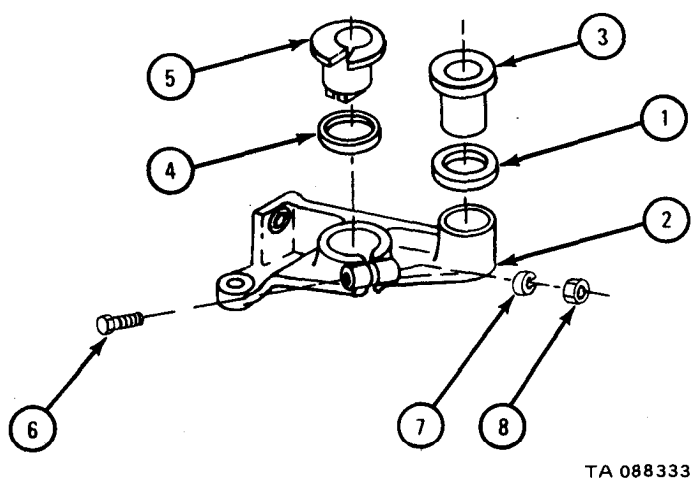

FRAME 4

1. From inside of worm gear housing (1), loosely put in worm adjusting bearing (2).
2. Place leveling worm gear (3) and thrust washer (4) in housing (1).

NOTE

Leveling worm gear (3) must be between adjusting bearing (1) and thrust washer (4). Setscrew slot in thrust washer (4) must face away from worm gear.

3. Put key (5) in shaft (6).
4. Aline keyway in worm gear (3) and thrust washer (4) with key (5) in shaft (6). Tap shaft through thrust washer end of housing (2) until square end of shaft sticks out as far as noted.

GO TO FRAME 5

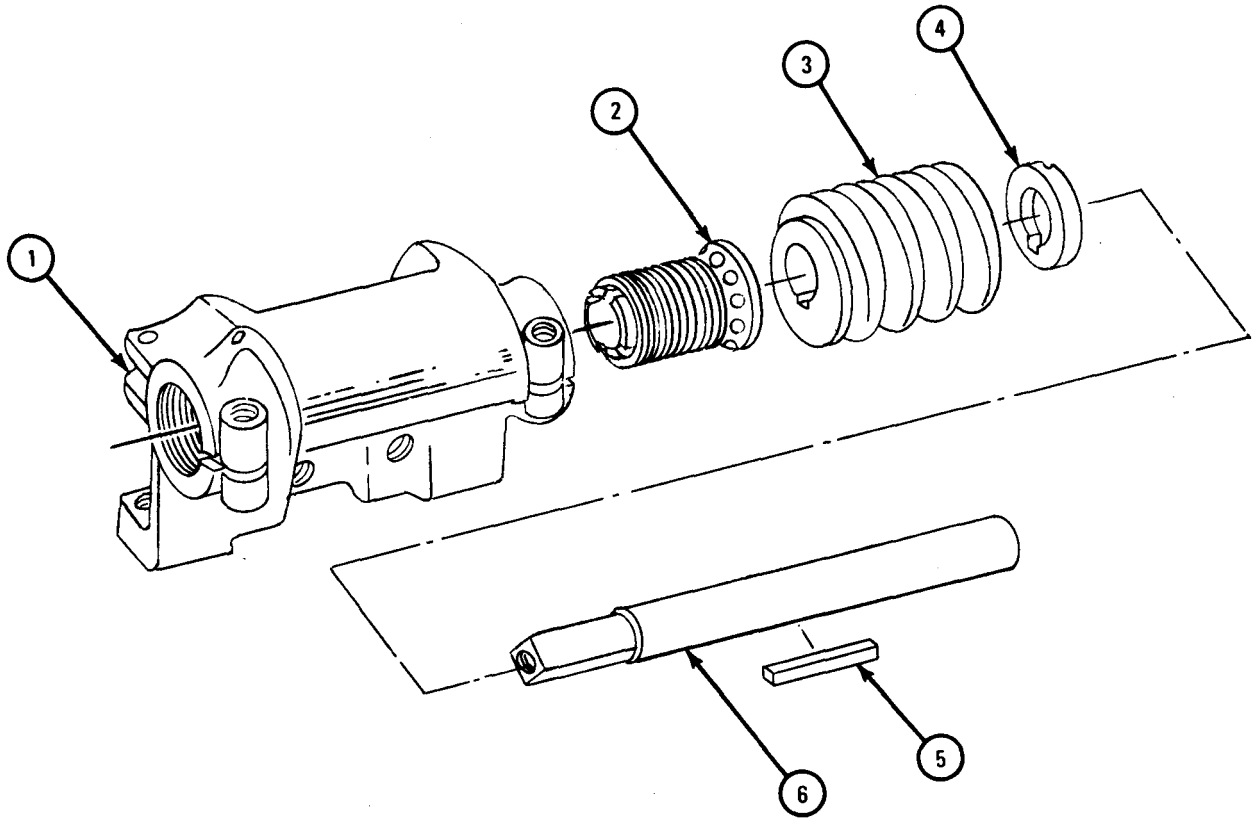

FRAME 5

1. Finger tighten adjusting bearing (1) against gear shaft (2).

CAUTION

Be sure end of key clears thrust washer. It must not stop worm adjusting bearing. Damage to equipment may result if needed clearance is not set up.

2. Check clearance of key by turning shaft (2) by hand. Shaft must turn freely.
3. Put bearing sleeve (3) on shaft (2). Push bearing sleeve down until slot on outside of bearing sleeve alines with hole for rear capscrew (4).
4. Put two capscrews (4) with lockwashers (5) and lockscrews (6) into housing (7), but do not tighten lockscrews.
5. Put in two lubrication fittings (8).

END OF TASK

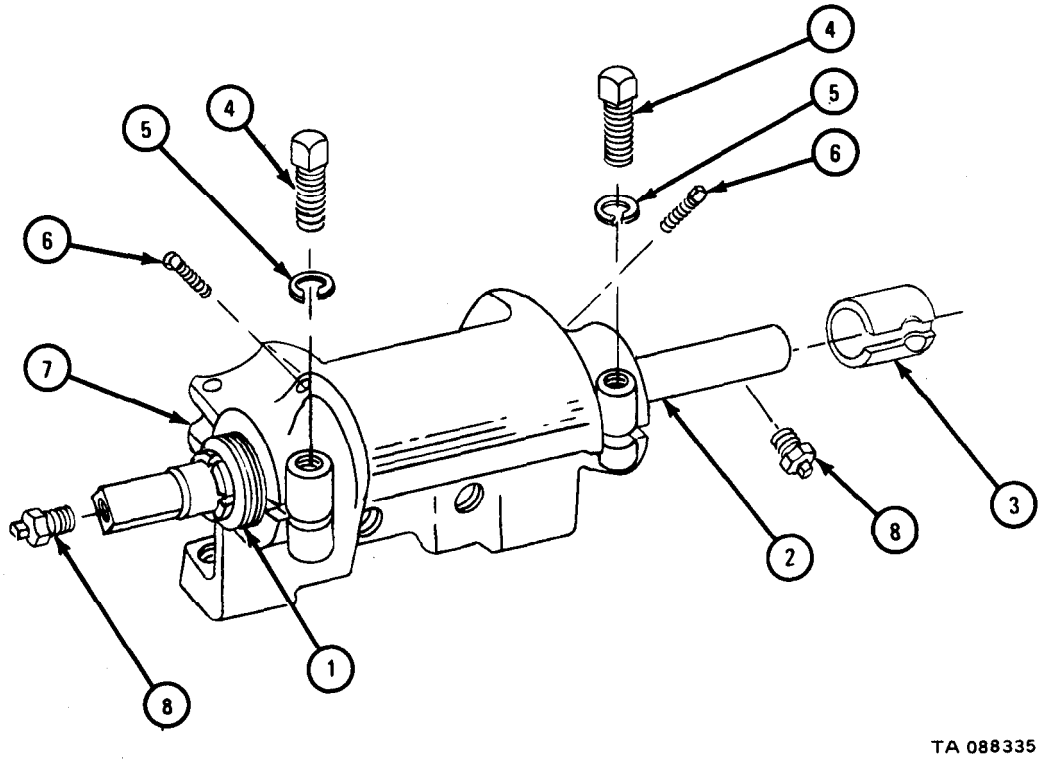

g. Adjustment.

FRAME 1

1. Tighten screw (1).
2. Turn shaft (2) until slot in thrust washer (3) is under screw (4).
3. Turn screw (4) until it touches thrust washer (3), then back screw off 1/4 turn.

NOTE

Do not allow dog-point end of screw (5) to enter slot in adjusting bearing (6).

4. Turn screw (5) into adjusting bearing (6).
5. Using worm adjusting bearing wrench, turn adjusting bearing (6) so that gear shaft (2) does not move from end to end.
6. Check that shaft (2) turns freely and that it moves as little as possible from end to end.
7. Turn screw (5) until it touches bearing (6), then back screw off 1/2 turn.
8. Tighten screw (7) and check that shaft (2) turns freely.

END OF TASK

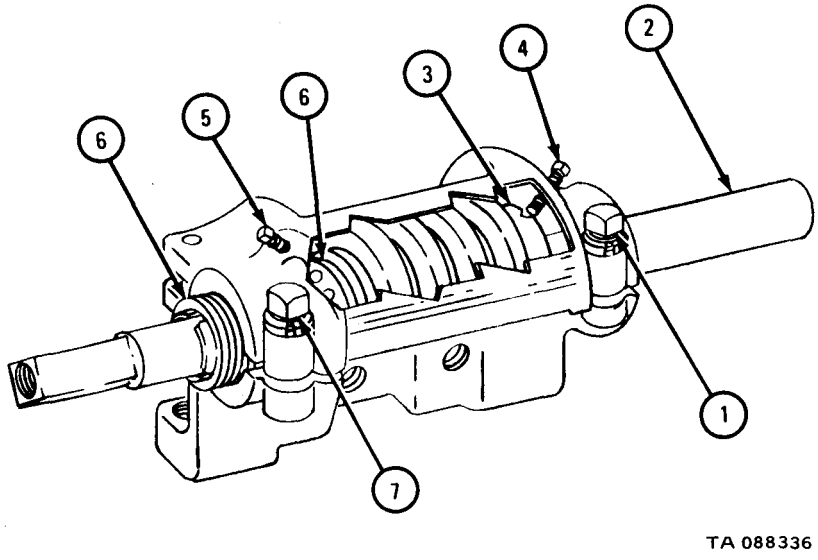

h. Replacement.

FRAME 1

1. Put two shim sets (1) on intermediate case assembly studs (2) as noted.
2. Put vertical leveling worm assembly (3) on studs (2) and put on four nuts (4).
3. Slide in shim set (5) as noted and aline holes.
4. Put in two screws (6) and washers (7).
5. Put on safety wire (8).

GO TO FRAME 2

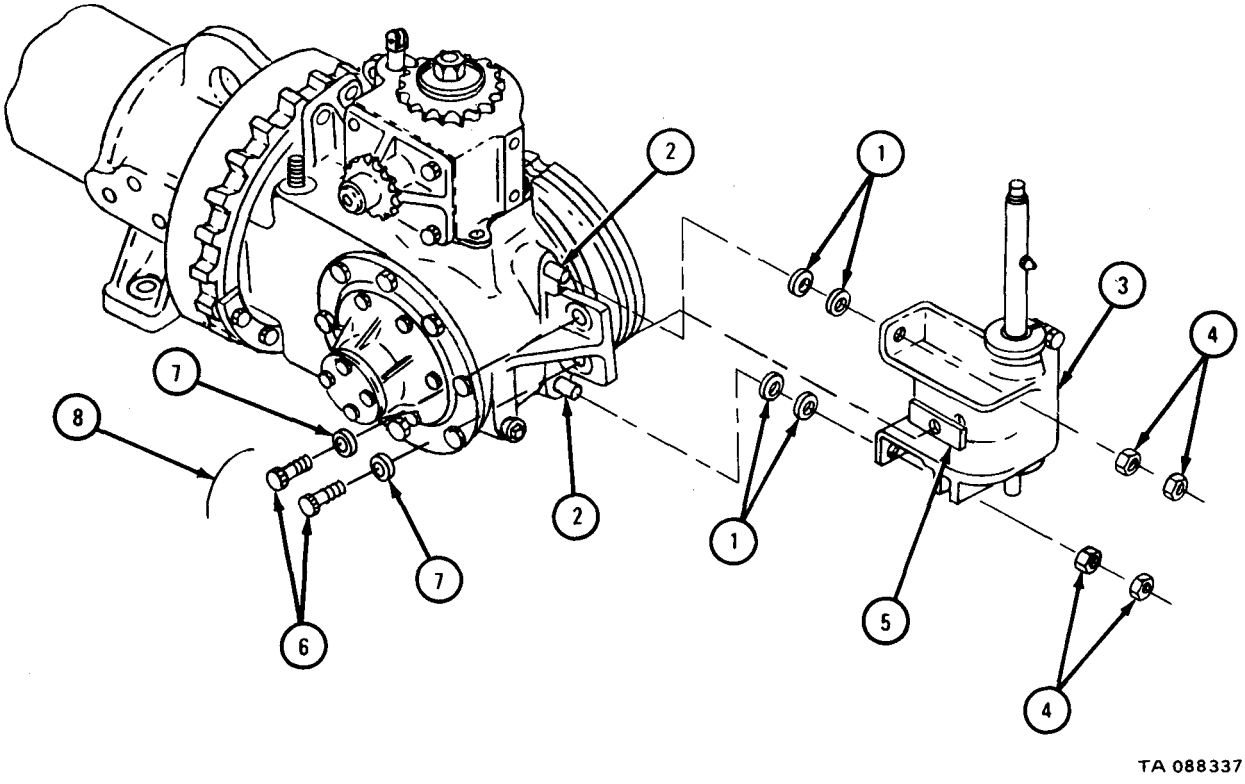

FRAME 2

1. Aline two shim sets (1) with intermediate case assembly (2) and power leveler assembly (3) as noted.
2. Aline bracket (4) with shim sets (1) and assemblies (2 and 3) and put in two screws (5) and lockwashers (6).
3. Put in two screws (7) with two washers (8) and two lockwashers (9).

GO TO FRAME 3

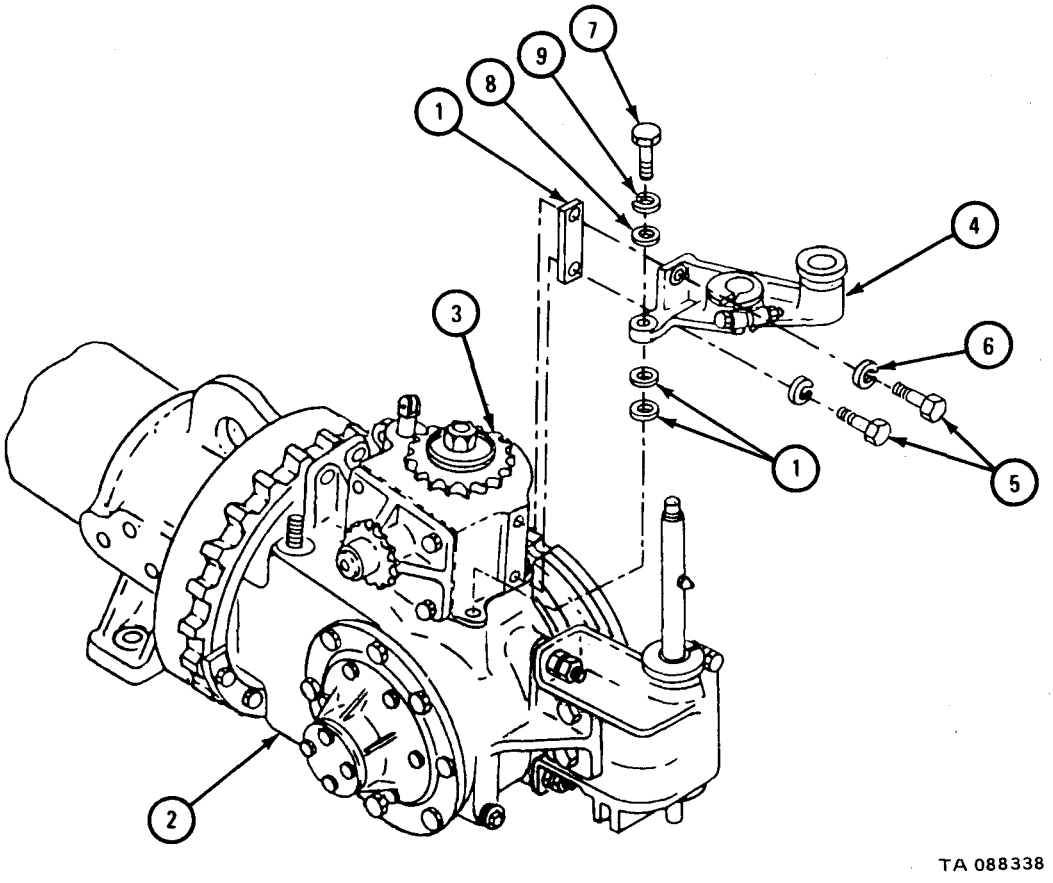

FRAME 3

1. Put chain tightening shaft assembly (1) in bracket (2).
2. Put key (3) in vertical leveling worm gear shaft (4).
3. Aline keyway in second reduction drive chain sprocket (5) with key (3), and put second reduction drive chain sprocket (5) on vertical leveling worm gear shaft (4).
4. Tighten setscrew (6) and put on safety wire (7).

NOTE

Follow-on Maintenance Action Required:

Replace vertical leveling worm drive chains. Refer to TM 9-2320-209-20.

END OF TASK

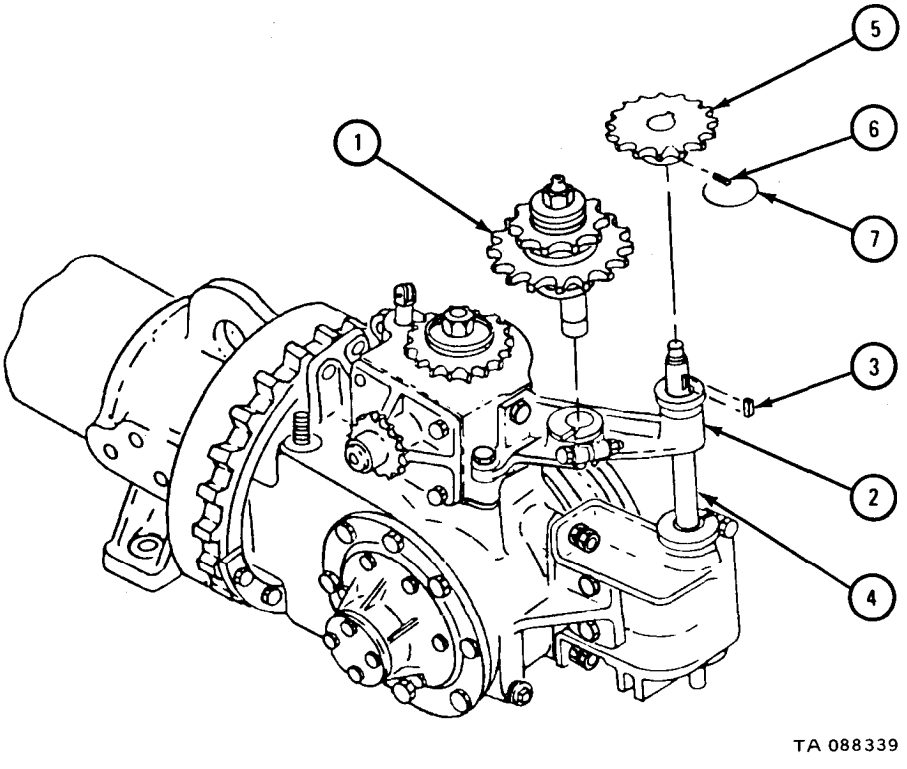

17-51. OPERATION LEVER ASSEMBLY REMOVAL, REPAIR, AND REPLACEMENT (TRUCK M764).

TOOLS: No special tools required

SUPPLIES: Cotter pin (2)

PERSONNEL: One

EQUIPMENT CONDITION: Truck parked, engine off, handbrake set.

a. Removal.

FRAME 1

1. Pull pin (1) out of seat support tube (2) and take off operator's seat (3).
2. Release locking latch (4) from boring machine operating controls (5).
3. Take off screw (6), nut (7), and locking latch (4).

GO TO FRAME 2

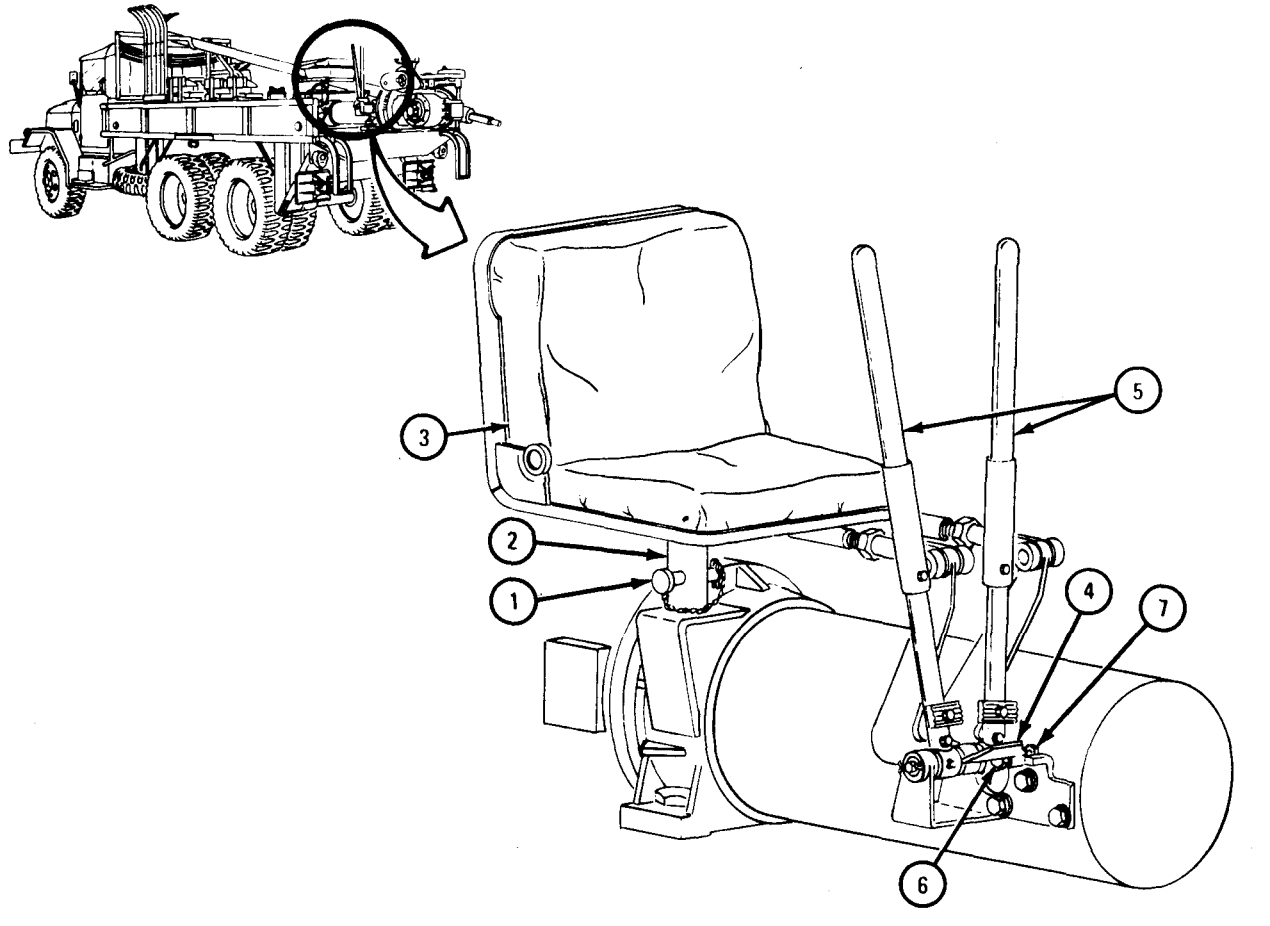

FRAME 2

1. Take out two cotter pins (1) and two clevis pins (2). Throw away cotter pins.
2. Take rod ends (3) off lever assemblies (4).

NOTE

Plate (7) is welded to handle assembly (8) and should not be taken off unless it is damaged. Refer to para 17-51d for inspection procedures.

3. Take off two screws (5), nuts (6), and plates (7),
4. Lift off two operating handles (8).

GO TO FRAME 3

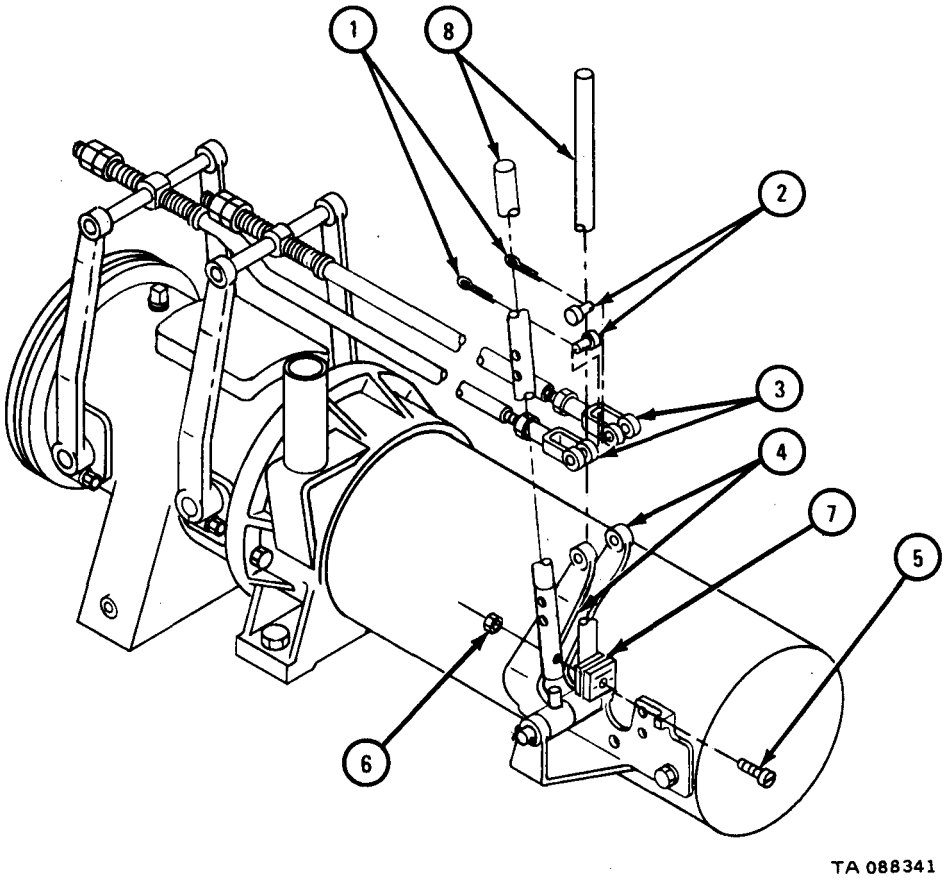

FRAME 2

1. Take out two cotter pins (1) and two clevis pins (2). Throw away cotter pins.
2. Take rod ends (3) off lever assemblies (4).

NOTE

Plate (7) is welded to handle assembly (8) and should not be taken off unless it is damaged. Refer to para 17-51d for inspection procedures.

3. Take off two screws (5), nuts (6), and plates (7),
4. Lift off two operating handles (8).

GO TO FRAME 3

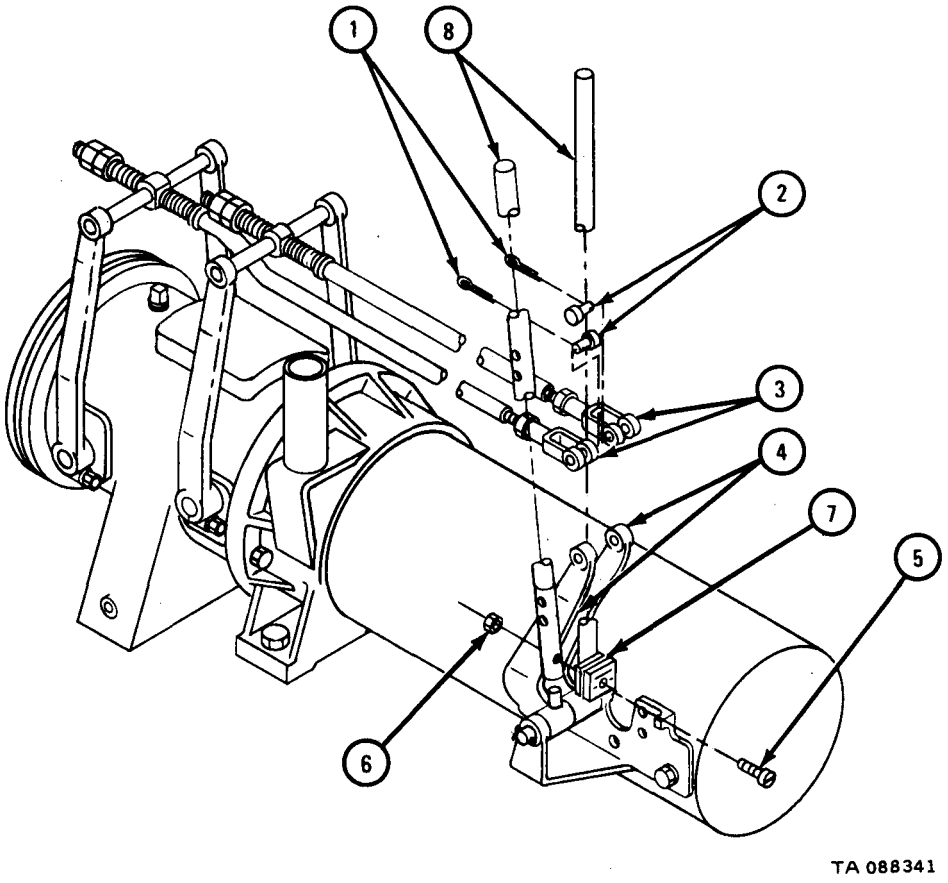

FRAME 3

1. Take out three screws (1) and lockwashers (2).
2. Take off bracket assembly (3).
3. Loosen four screws (4) four turns.
4. Take off two left arms (5) and two keys (6).
5. Take off rod assemblies (7).
6. Take off two right arms (8) and two keys (9).

END OF TASK

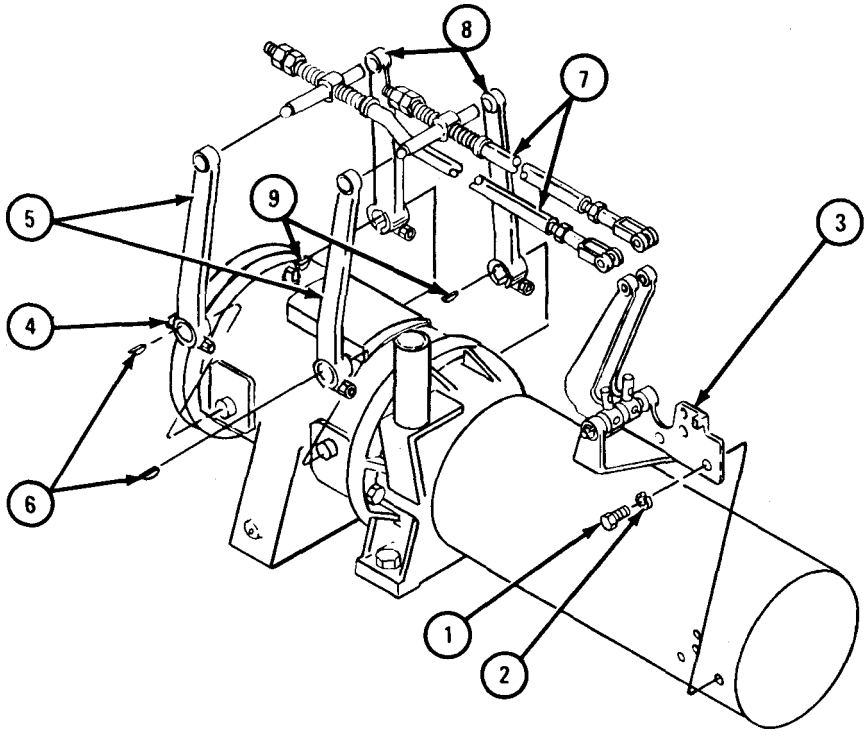

TA 088342

b. Disassembly.

FRAME 1

1. Take out two cotter pins (1) and shaft (2) and take off two levers (3). Throw away cotter pins.
2. Take out two lubrication fittings (4).

NOTE

Do not take out bushings unless they are damaged or worn. Refer to para 17-51d for inspection procedures.

3. Press two bushings (5) out of bracket (6).

GO TO FRAME 2

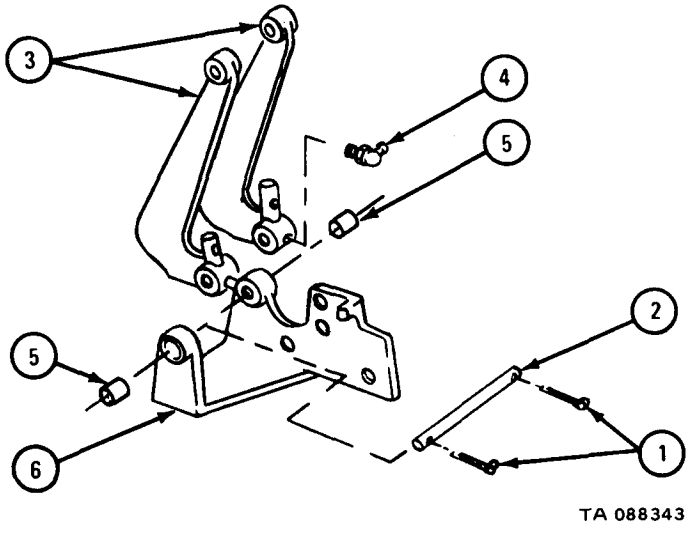

FRAME 2

NOTE

Note length of threading at end of each rod (1) to keep correct travel distance of rods.

1. Take two nuts (2) off rod (1).
2. Take beam (3) and two springs (4) off rod (1).
3. Take stop (5) off rod (1).
4. Take rod end (6) and nut (7) off rod (1).
5. Do steps 1 through 4 again for other rod (1).

END OF TASK

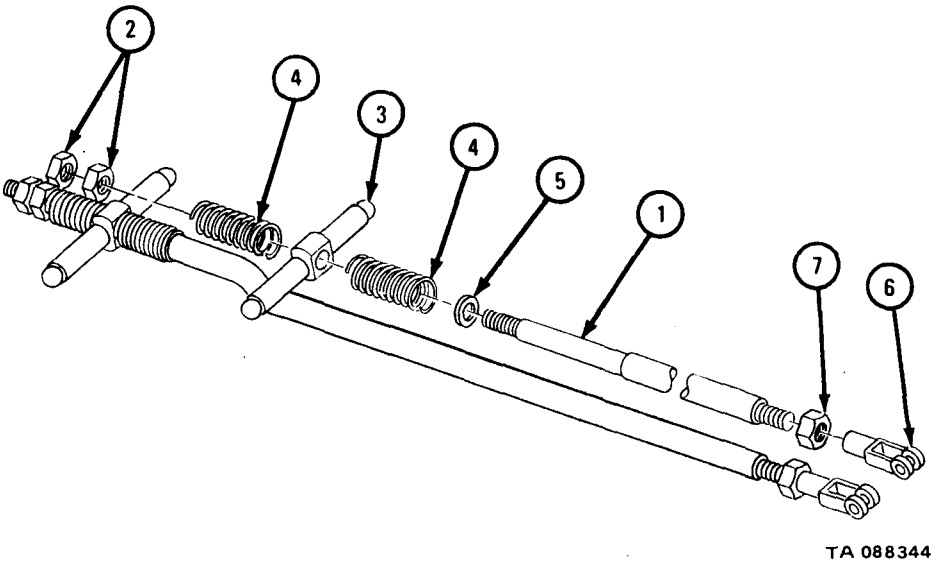

c. Cleaning.

(1) Clean all bearings. Refer to Part 1, para 10-8.

(2) There are no special cleaning procedures needed for all other parts. Refer to cleaning procedures given in Part 1, para 1-3.

d. Inspection and Repair.

FRAME 1

1. Check that springs (1) have no distortion, breaks or other damage. If springs are worn or damaged, get new ones.
2. Check that nuts (2), screws (3), and threaded holes have no damaged threads or heads. If parts are damaged, get new nuts and screws and rethread damaged holes.
3. Check that two bushings (4) are not scored, chipped or damaged in any other way. If bushings are damaged, get new ones.
4. Check that bracket (5), rods (6), levers (7), handles (8), arms (9), and beams (10) have no cracks, bends or wear. Repair by straightening or welding. Refer to FM 43-2 and TM 9-237. If more repair is needed, get new parts.

END OF TASK

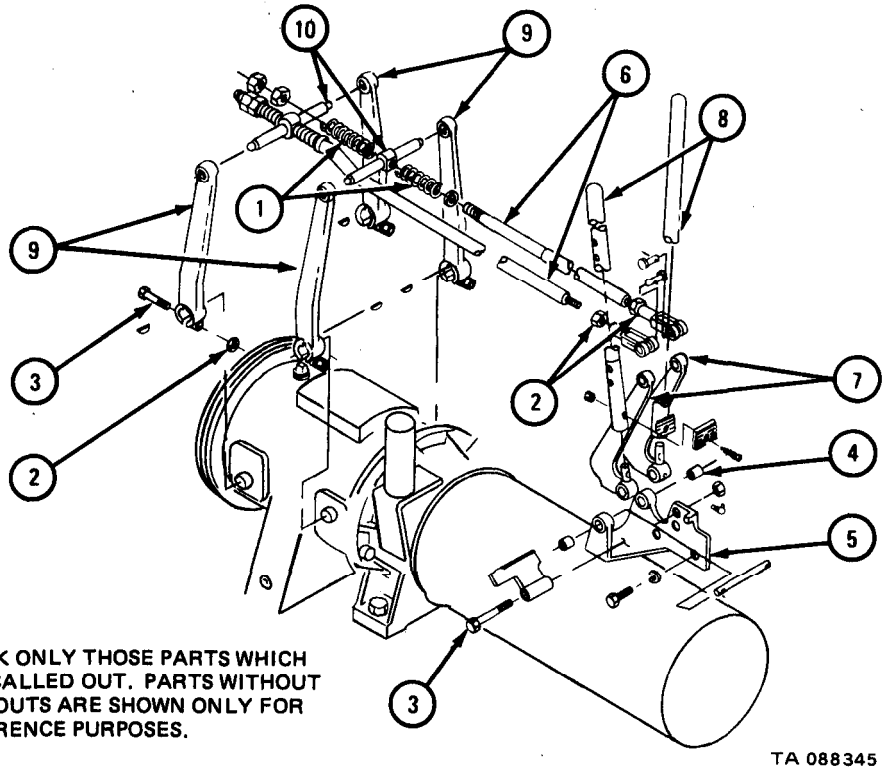

NOTE: CHECK ONLY THOSE PARTS WHICH ARE CALLED OUT. PARTS WITHOUT CALLOUTS ARE SHOWN ONLY FOR REFERENCE PURPOSES.

e. Assembly.

FRAME 1

1. Put nut (1) and rod end (2) on rod (3) at distance noted.
2. Put stop (4) and one spring (5) on rod (2).
3. Put beam (6) and other spring (5) on rod (2).
4. Put two nuts (7) on end of rod (2) as noted.
5. Do steps 1 through 4 again for other rod (3).

GO TO FRAME 2

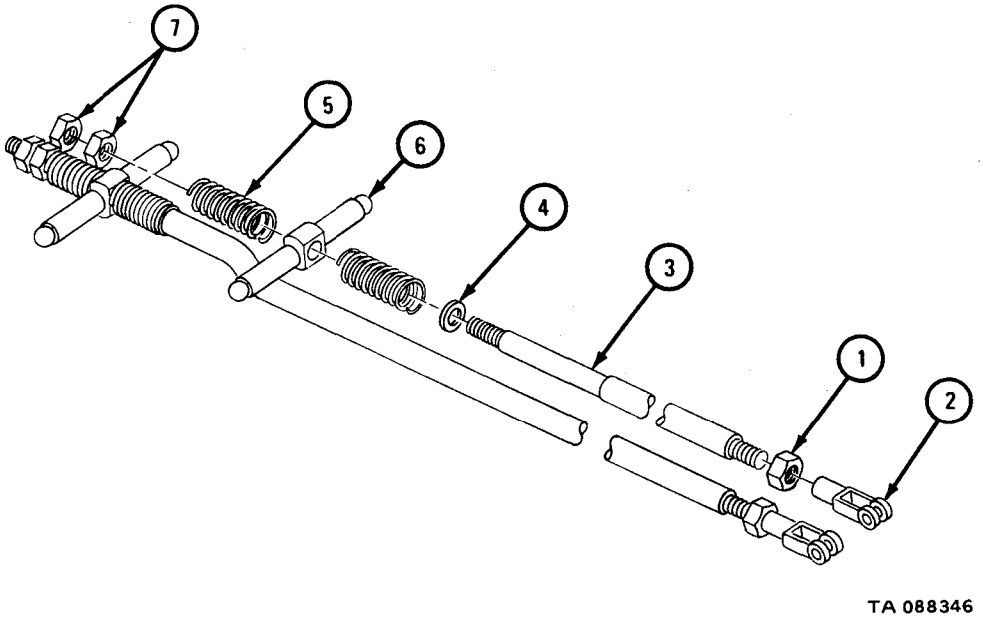

f. Replacement.

FRAME 1

1. Aline bracket (1) on support tube (2) and put in three screws (3) with lockwashers (4).
2. Put two left arms (5) on throw cams (6). Put in two keys (7) and tighten two screws (8).
3. Put in two rod assemblies (9).
4. Do step 2 again for two right arms (10).

GO TO FRAME 2

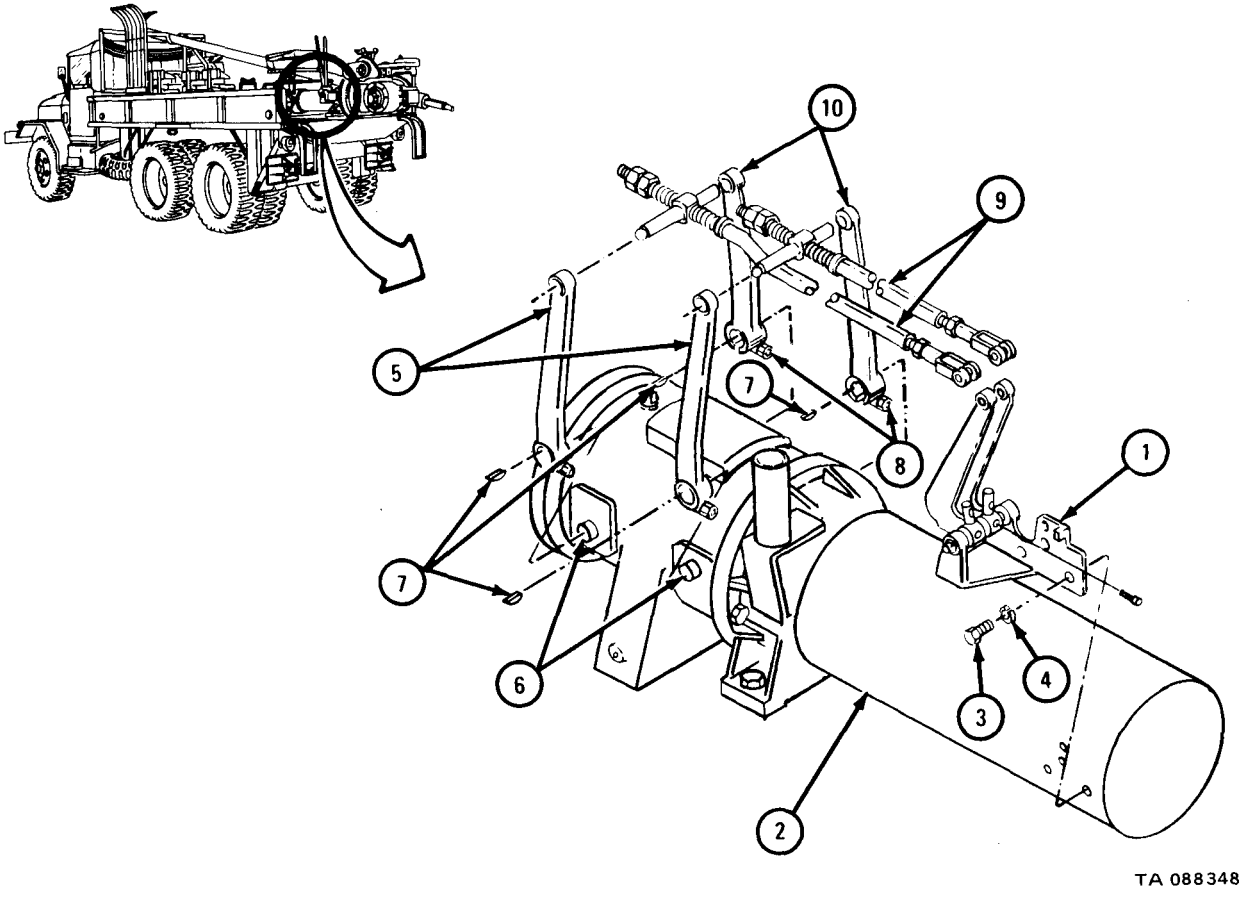

f. Replacement.

FRAME 1

1. Aline bracket (1) on support tube (2) and put in three screws (3) with lockwashers (4).
2. Put two left arms (5) on throw cams (6). Put in two keys (7) and tighten two screws (8).
3. Put in two rod assemblies (9).
4. Do step 2 again for two right arms (10).

GO TO FRAME 2

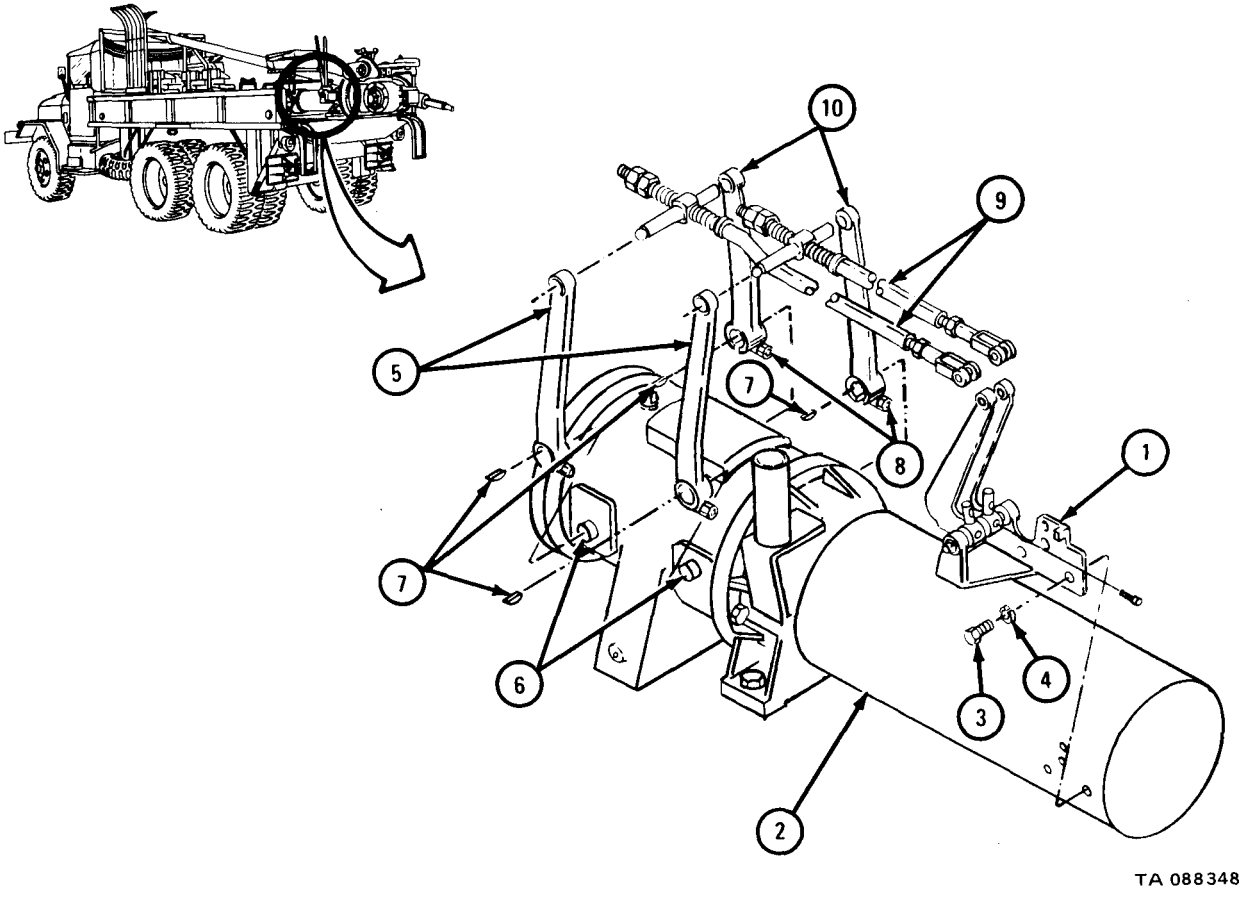

FRAME 2

1. Aline holes in rod ends (1) with holes in lever assemblies (2) and put in two clevis pins (3).
2. Put two cotter pins (4) into clevis pins (3).
3. Put two operating handles (5) on lever assemblies (2).
4. If taken off, put two plates (6) on operating handles (5). Put in two screws (7) and put on two nuts (8).

GO TO FRAME 3

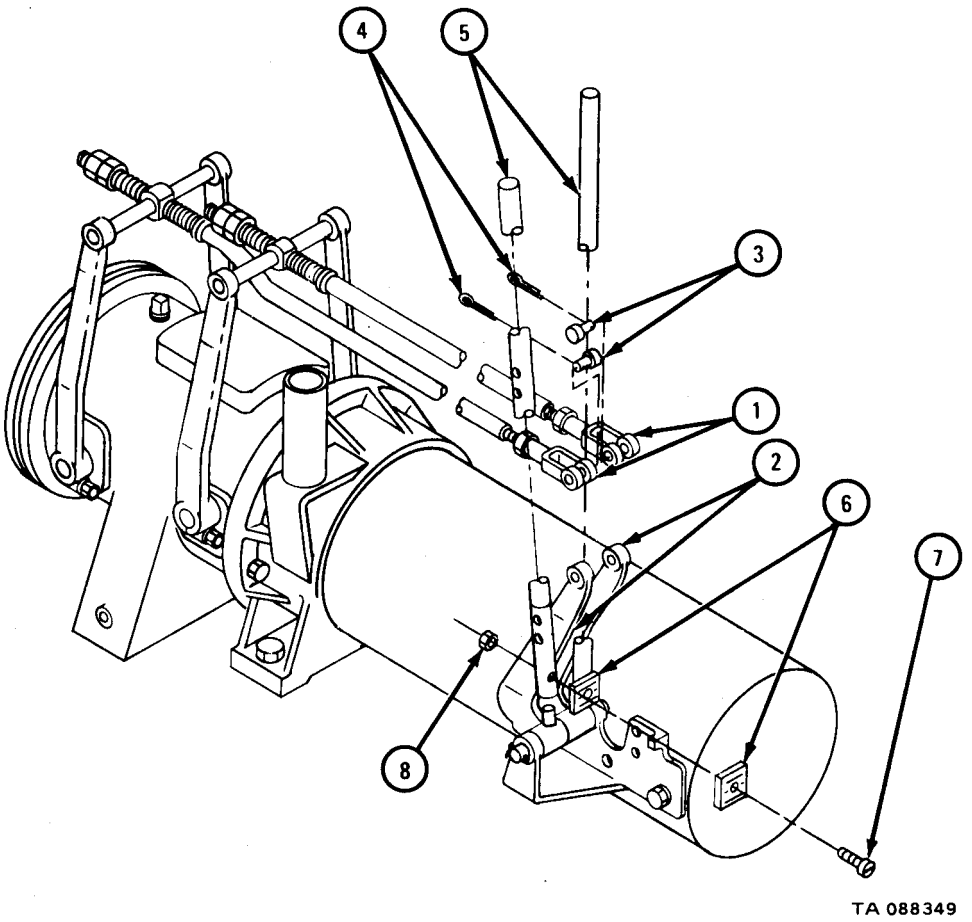

FRAME 3

1. Put locking latch (1) on bracket (2). Put in screw (3) and put on nut (4).
2. Put on Operator's seat (5) and put in pin (6).

END OF TASK

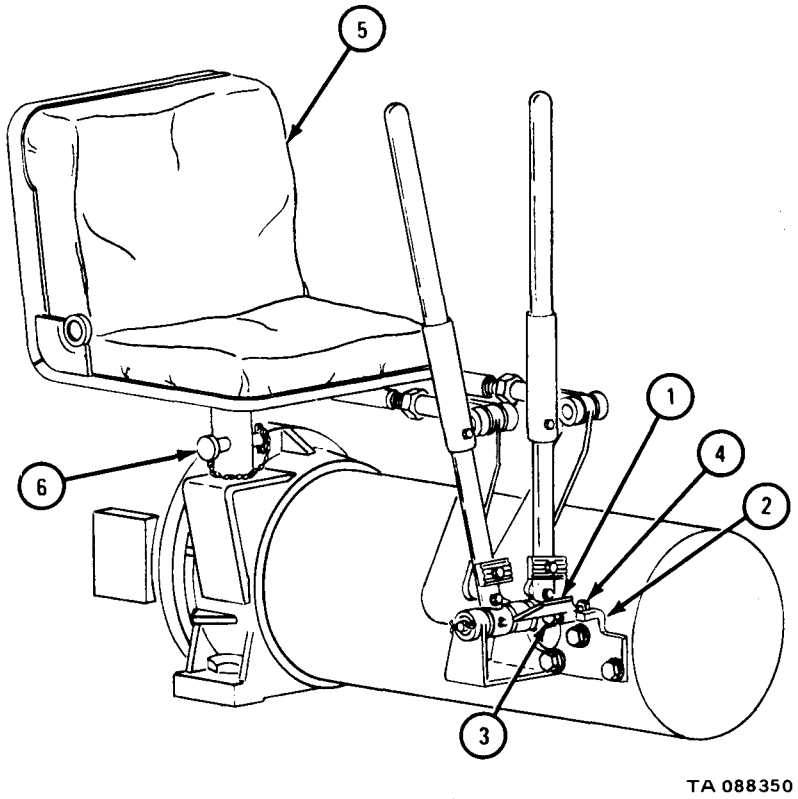

17-52. FEED AND DRIVE CLUTCH AND BRAKE ASSEMBLIES AND CLUTCH SHAFT PINIONS REMOVAL, REPAIR, AND REPLACEMENT (TRUCK M764).

TOOLS: Hook spanner wrench, pn 11623221
Hook spanner wrench, pn 11623223

SUPPLIES: Brake shell and clutch case cap gasket (2)
Clutch housing-to-throw cam housing gasket (4)
Lubricating oil, ICE, OE/HDO 10, MIL-L-2104
Solvent, dry cleaning, type II (SD-2), Fed. Spec P-D-680
Artillery and automotive grease, type GAA, MIL-G-10924
Safety wire, 0.091-inch diameter
Cotter pin (2)
Cover gasket

PERSONNEL: One

EQUIPMENT CONDITION: Truck parked, engine off, handbrake set.

a. Preliminary Procedures.

(1) Remove earth boring case. Refer to para 17-46.

(2) Drain lubricant from clutch and brake gearcase. Refer to LO 9-2320-209-12/1.

b. Disassembly.

FRAME 1

1. Take pin (1) out of support tube (2) and lift off operator's seat (3).
2. Move latch (4) away from operating controls (5).
3. Take out two cotter pins (6) and clevis pins (7). Throw away cotter pins.
4. Take out three screws and lockwashers (8).
5. Take off operating controls (5).

GO TO FRAME 2

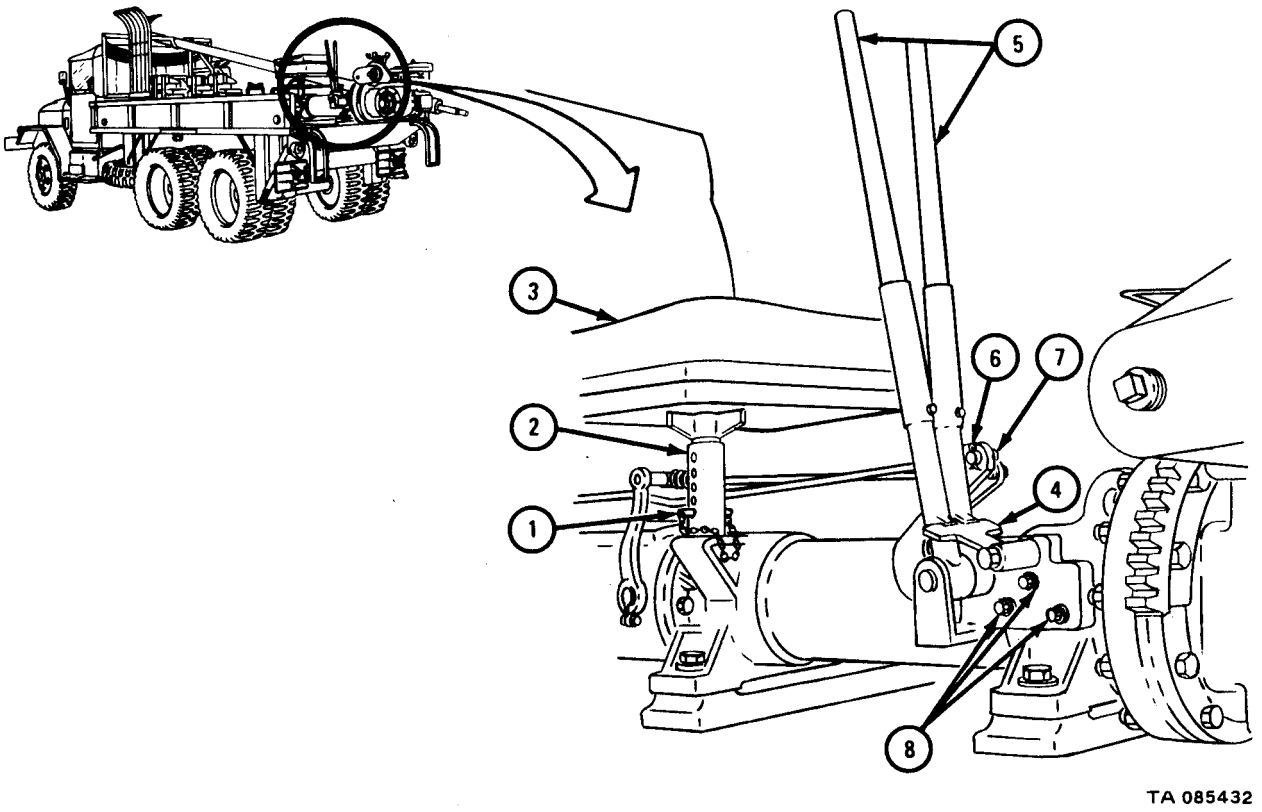

FRAME 2

1. Loosen four nuts (1) two turns.
2. Pull off four feed and drive throw cam arms (2) and pushrod beams (3).
3. Take out four woodruff keys (4). Tape keys to throw cam arms (2) so they will not be lost.

GO TO FRAME 3

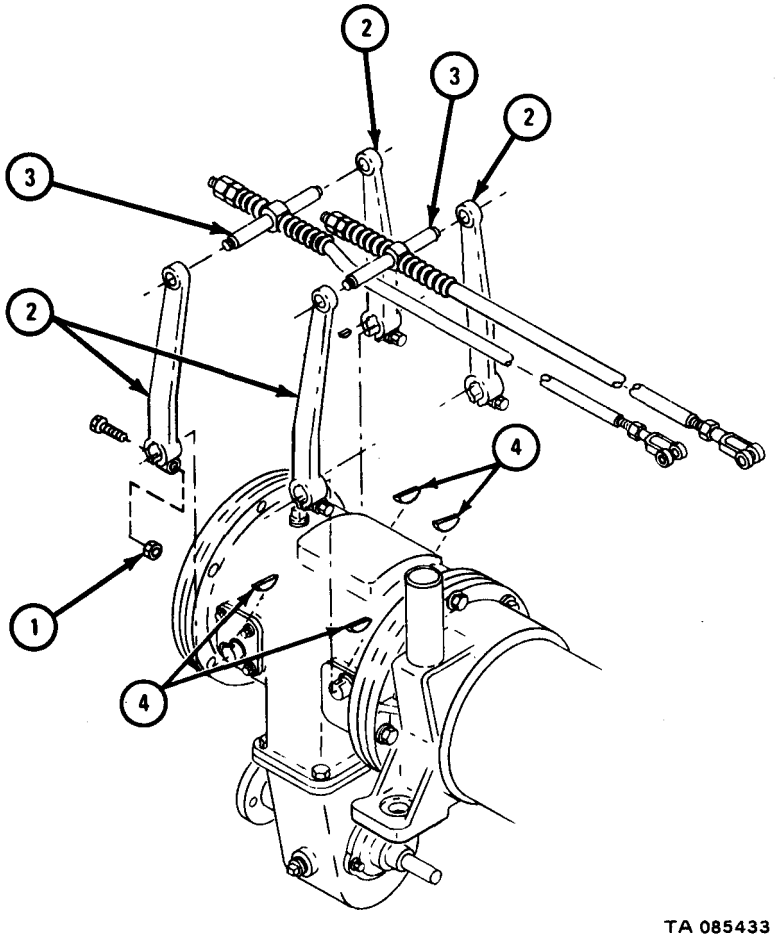

FRAME 3

1. Take out dipstick (1) and pipe (2).
2. Take out four screws (3) and washers (4).
3. Take off cam housing (5), cam assembly (6), and gasket (7). Throw away gasket.
4. Take cam assembly (6) out of cam housing (5).
5. Do steps 2, 3, and 4 again for other three cam housings (8).

GO TO FRAME 4

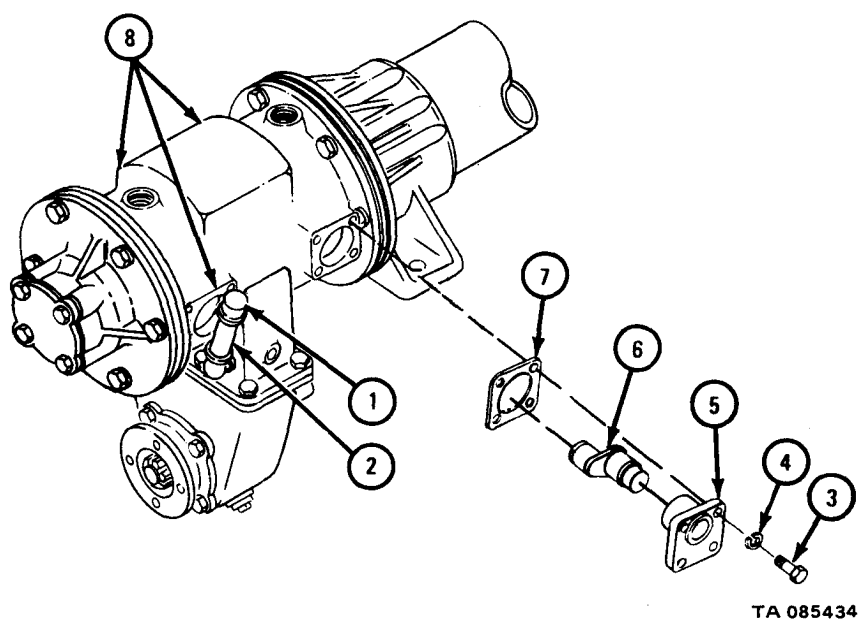

FRAME 4

1. Take out six screws (1), lockwashers (2), and four nuts (3).

NOTE

Be careful not to lose drive clutch bearing shim set between clutch case cap (4) and drive clutch bearing.

2. Pry clutch case cap (4) from drive brake shell (5).
3. Take off and throw away gasket (6).
4. Take off shims (7).

GO TO FRAME 5

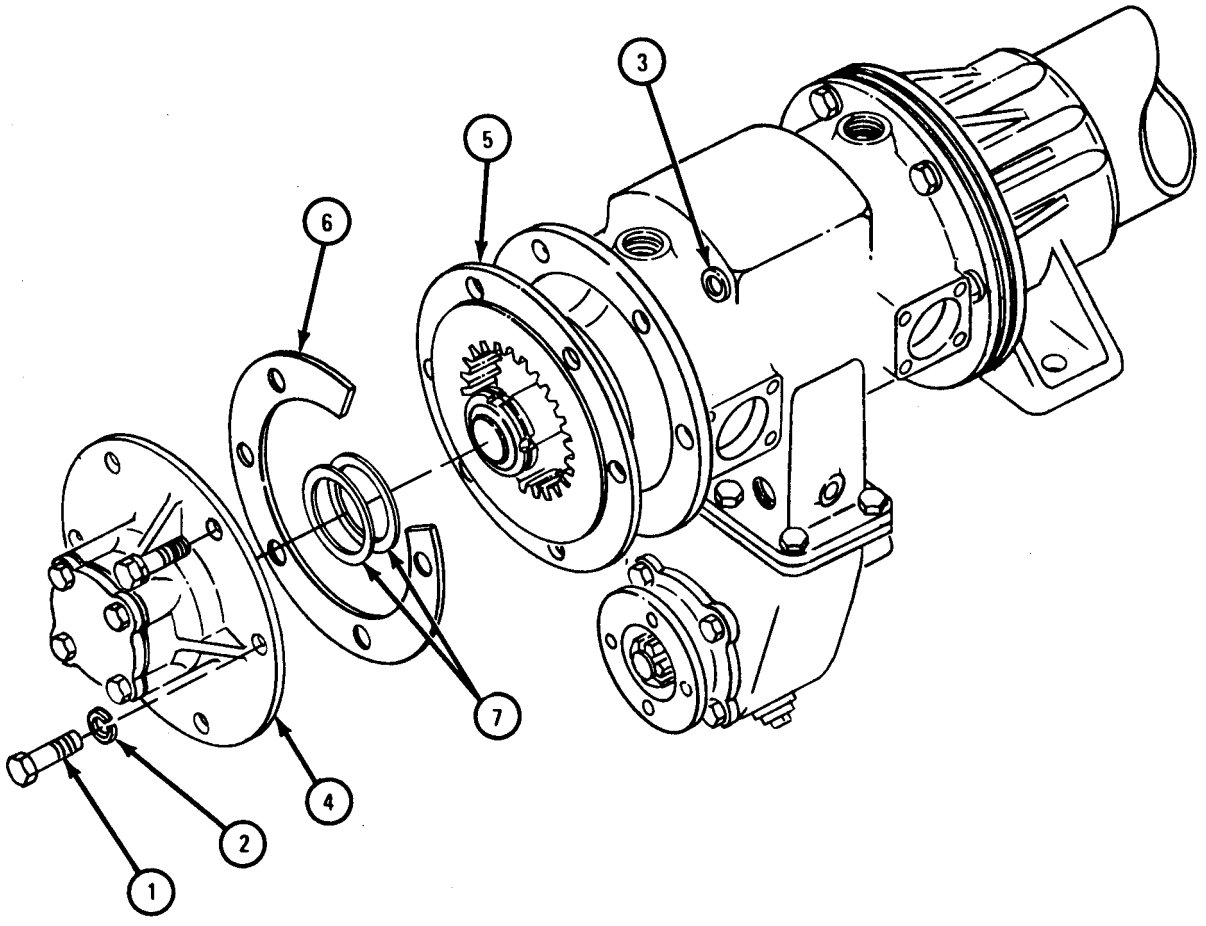

FRAME 5

1. Take out four screws and lockwashers (1) and take off clutch case cap cover (2).
2. Take off and throw away clutch case cap gasket (3).

NOTE

Note thickness of drive clutch bearing shim set (4) so that same thickness can be put back.

3. Take drive clutch bearing shim set (4) out of clutch case cap (5).
4. Press drive clutch shaft ball bearing (6) out of clutch case cap (5).

GO TO FRAME 6

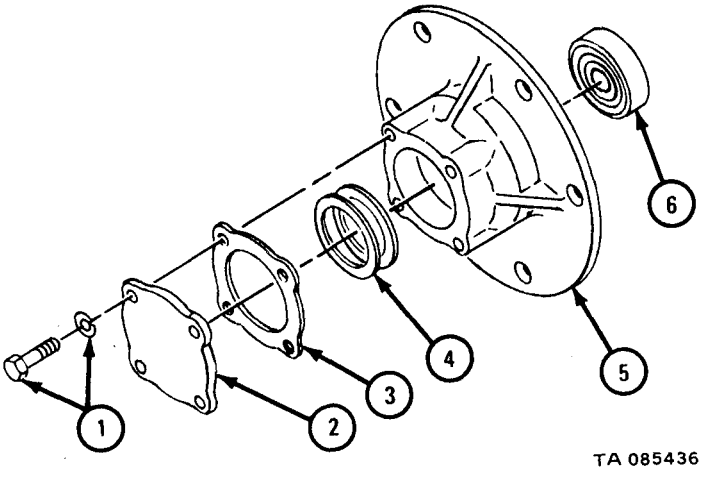

FRAME 7

NOTE

Do not take out two lower screws from support tube in step 1.

1. Take out four nuts, lockwashers and two upper screws (1) holding support tube (2) to brake shell (3).
2. Take out two screws and washers (4).

CAUTION

Be careful when taking out drive gear from clutch case (5). They can easily be damaged.

3. Slide clutch case (5) and housing assembly (6) off drive clutch and brake assembly (7) using hoist.

GO TO FRAME 8

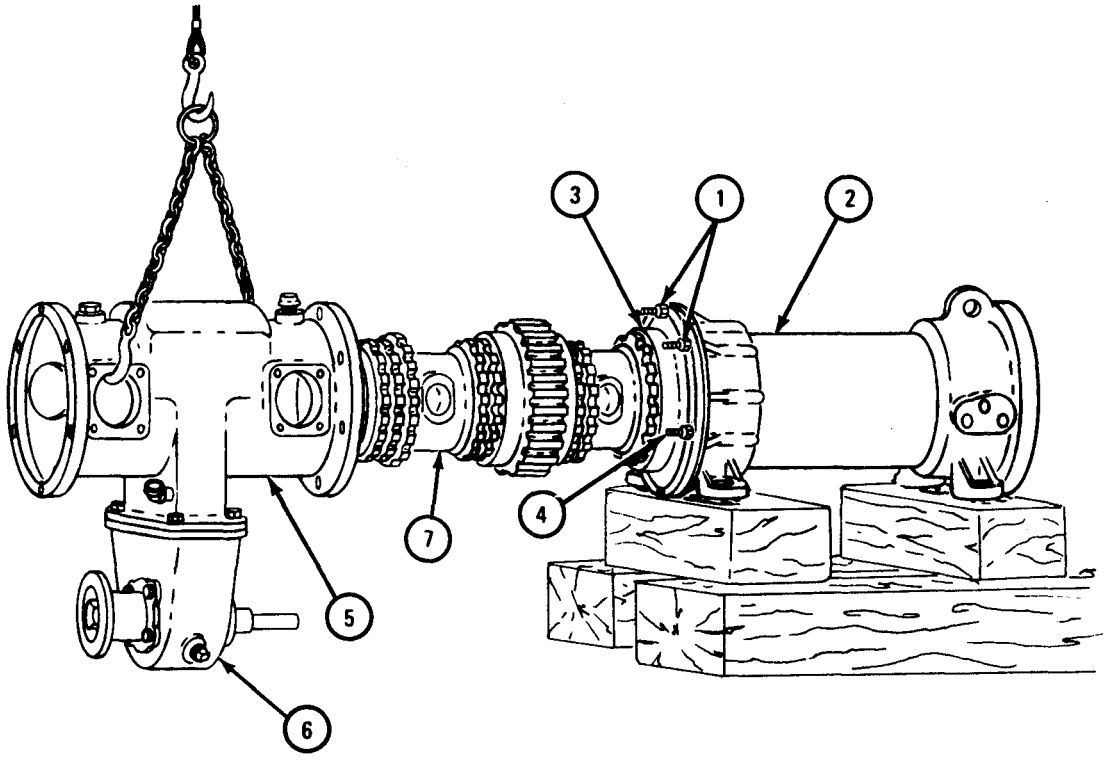

TA 085438

FRAME 7

NOTE

Do not take out two lower screws from support tube in step 1.

1. Take out four nuts, lockwashers and two upper screws (1) holding support tube (2) to brake shell (3).
2. Take out two screws and washers (4).

CAUTION

Be careful when taking out drive gear from clutch case (5). They can easily be damaged.

3. Slide clutch case (5) and housing assembly (6) off drive clutch and brake assembly (7) using hoist.

GO TO FRAME 8

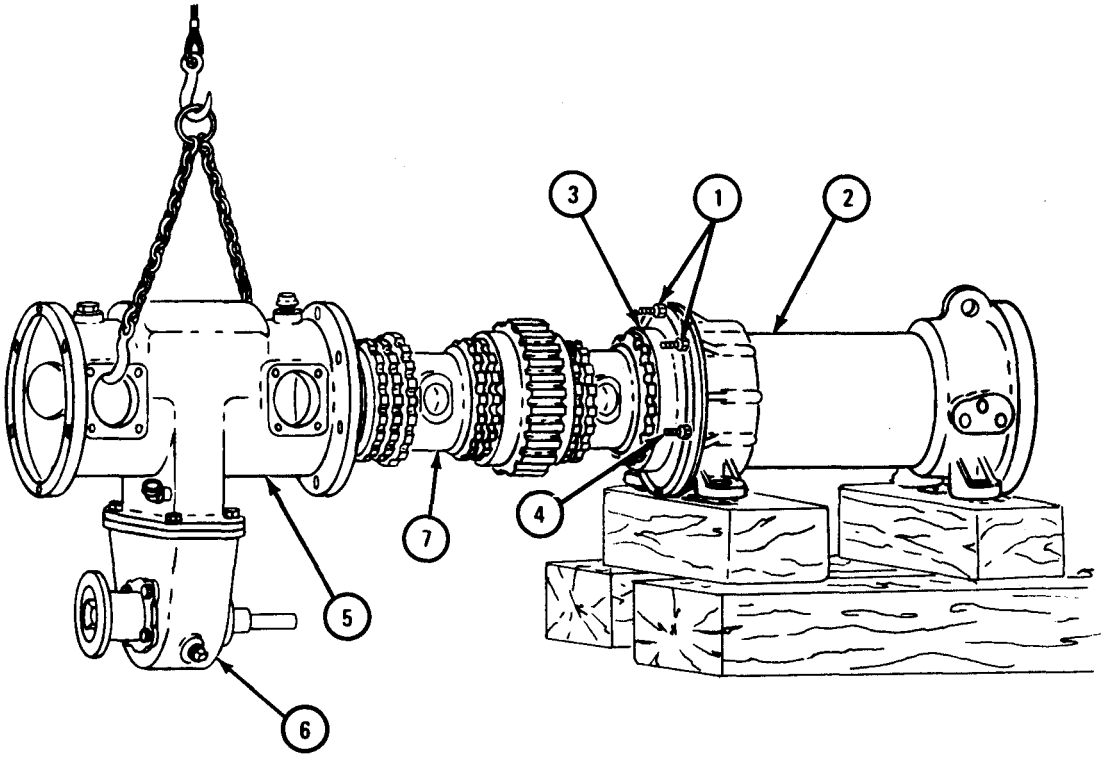

TA 085438

FRAME 8

1. Take off safety wire (1).
2. Loosen setscrew (2) three turns.
3. Take adjusting nut (3) off drive sleeve (4).
4. Pull off drive sleeve ball bearing (5).
5. Pull off drive brake hub assembly (6).

NOTE

Note number and order of drive brake internal and external tooth disks (7) before taking them off.

6. Take drive brake disks (7) off brake hub (8). Tie drive brake disks together in order noted.

GO TO FRAME 9

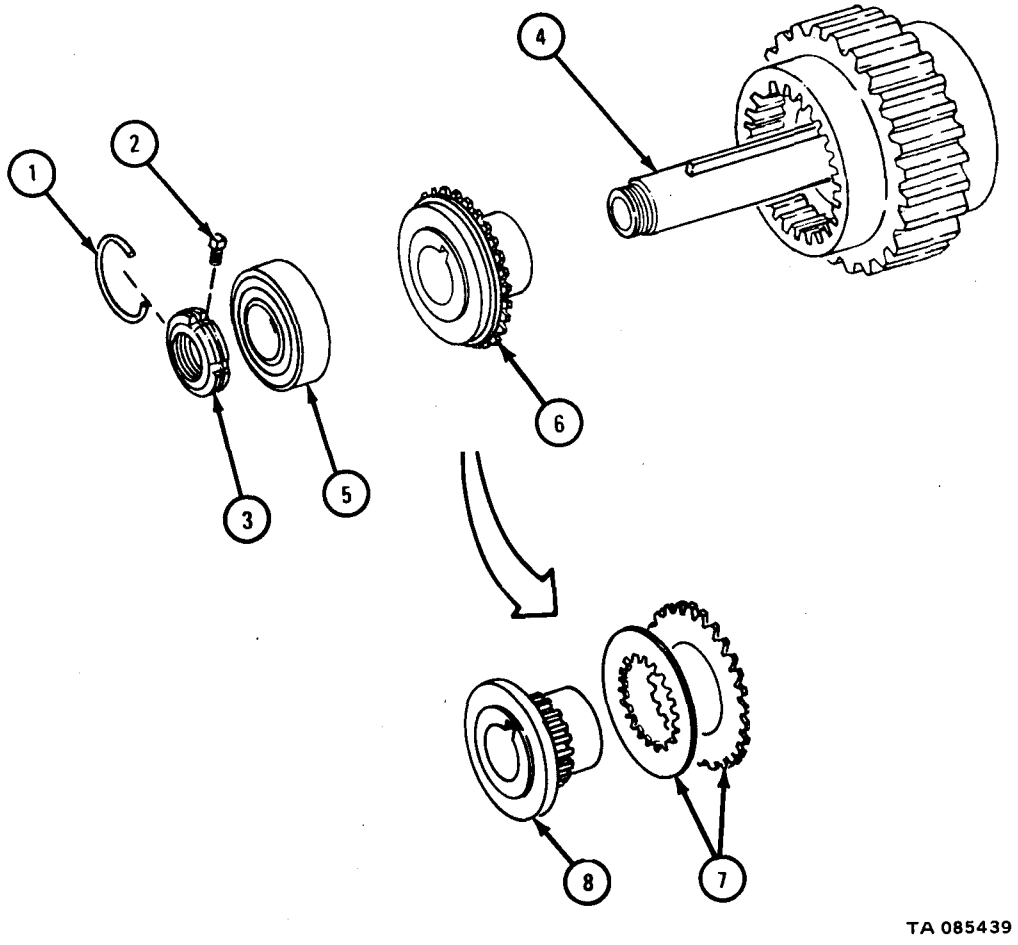

FRAME 9

1. Take off drive brake pressure plate assembly (1).
2. Take off throw ring (2) and bearing (3) with bearing (4).
3. Take off pressure plate (5) with bearing cup (6).

GO TO FRAME 10

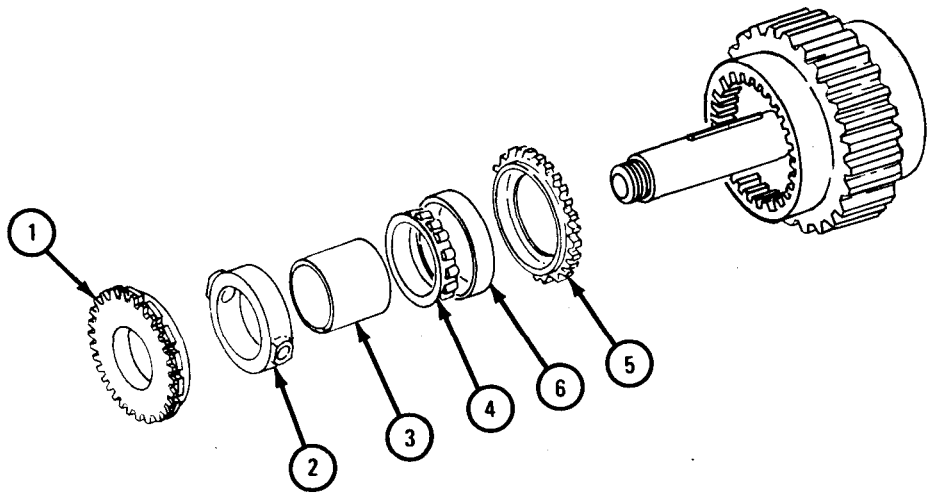

TA 085440

FRAME 10

1. Pull off drive brake hub assembly (1).

NOTE

Note number and order of drive brake internal and external tooth disks before taking disks off hub (3).

2. Take drive brake disks (2) off brake hub (3). Tie disks together in order noted.
3. Take out machine key (4).
4. Press clutch shell gear (5) with bearing (6) off drive sleeve (7).

NOTE

Do not take out drive sleeve bearing (6) unless it is damaged. Refer to para 17-52d for inspection procedures.

5. Press out drive sleeve bearing (6).

GO TO FRAME 11

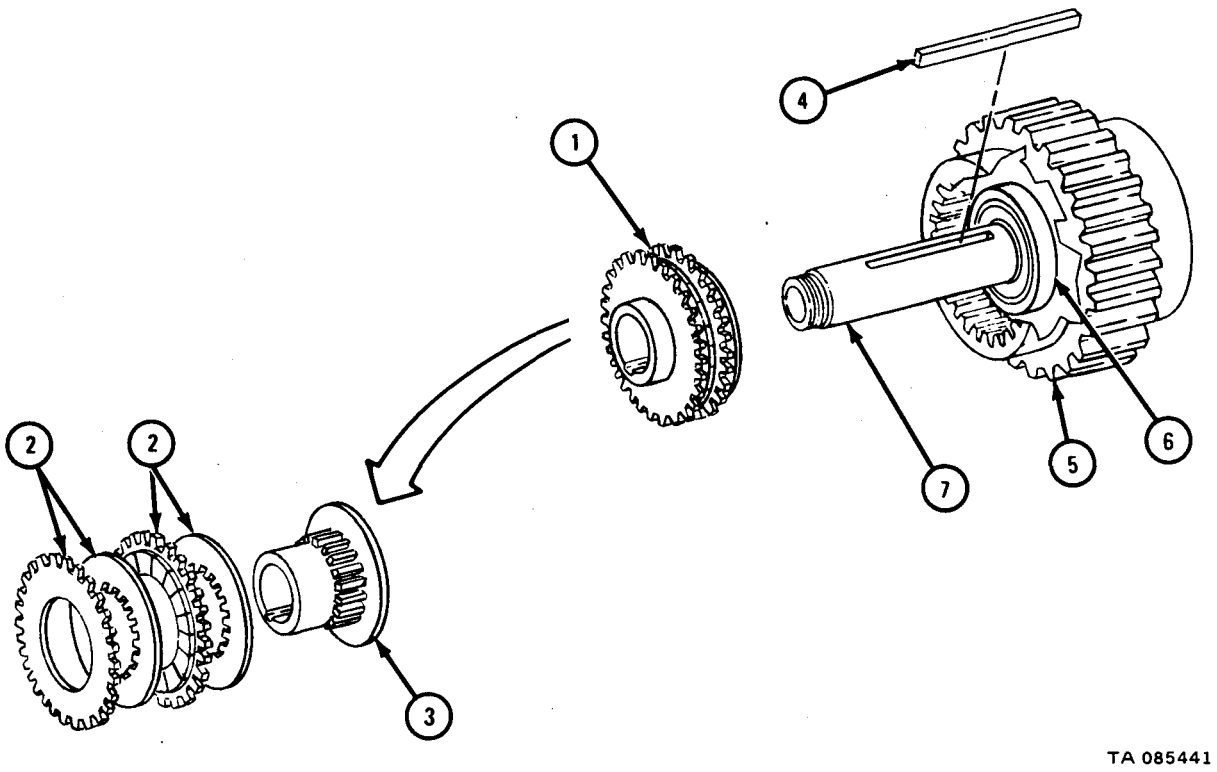

FRAME 11

1. Take out key (1).
2. Take feed clutch and brake assembly (2) with shaft and coupling (3) out of tube assembly (4) using hoist and rope sling.

GO TO FRAME 12

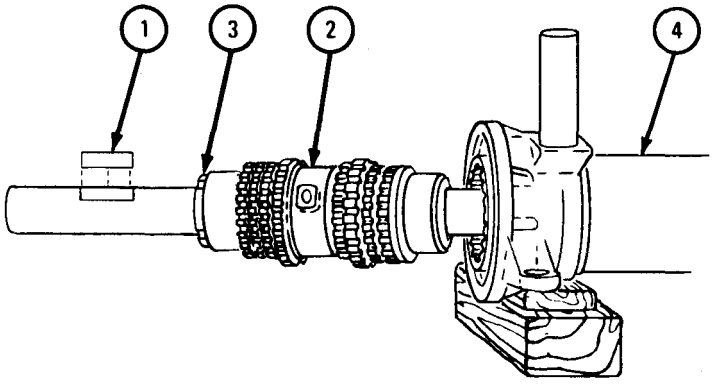

TA 085442

FRAME 12

1. Take off safety wire (1).
2. Loosen setscrew (2) and take off nut (3).
3. Take off bearing (4).

NOTE

Note order in which disks (5, 6, and 7) are taken out.

4. Take off disks (5, 6, and 7).
5. Take off pressure plate with cup (8).

GO TO FRAME 13

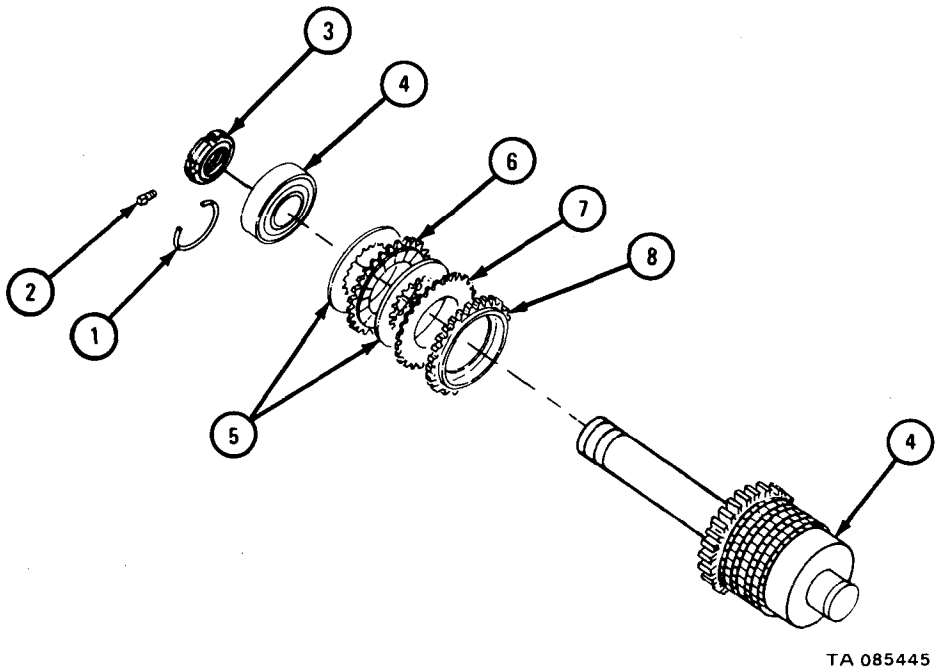

FRAME 13

1. Take off bearing (1) and bearing sleeve (2).
2. Take off throw ring (3) and pressure plate assembly (4).

NOTE

Note the way two disks (5 and 6) are taken out so they can be put back the same way.

3. Take off two disks (5 and 6) and hub (7).
4. Take out key (8).
5. Take off bearing (9).

GO TO FRAME 14

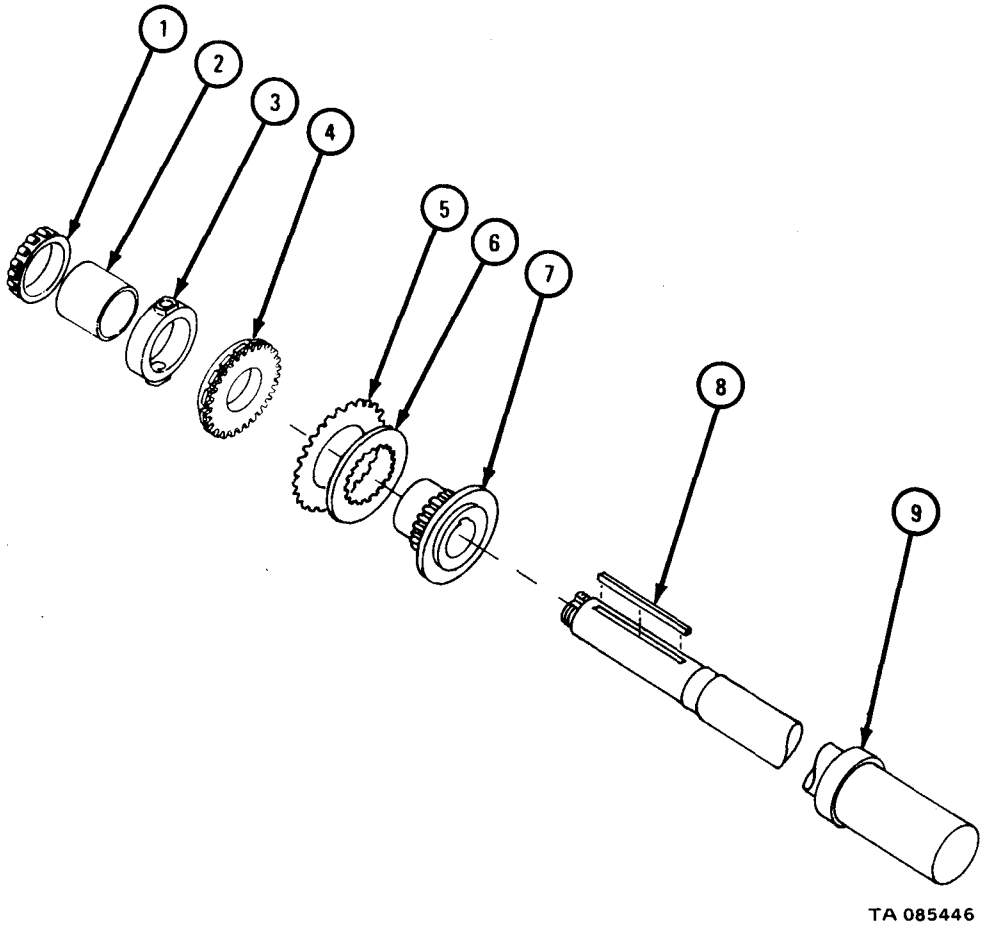

FRAME 14

1. Take out two lower screws (1).
2. Take feed brake shell (2) and gasket (3) off support tube (4). Throw away gasket.

NOTE

Do not take out bearing sleeve (5) unless it is damaged. Refer to para 17-52d for inspection procedures.

3. Take out feed clutch shaft inner bearing sleeve (5).

END OF TASK

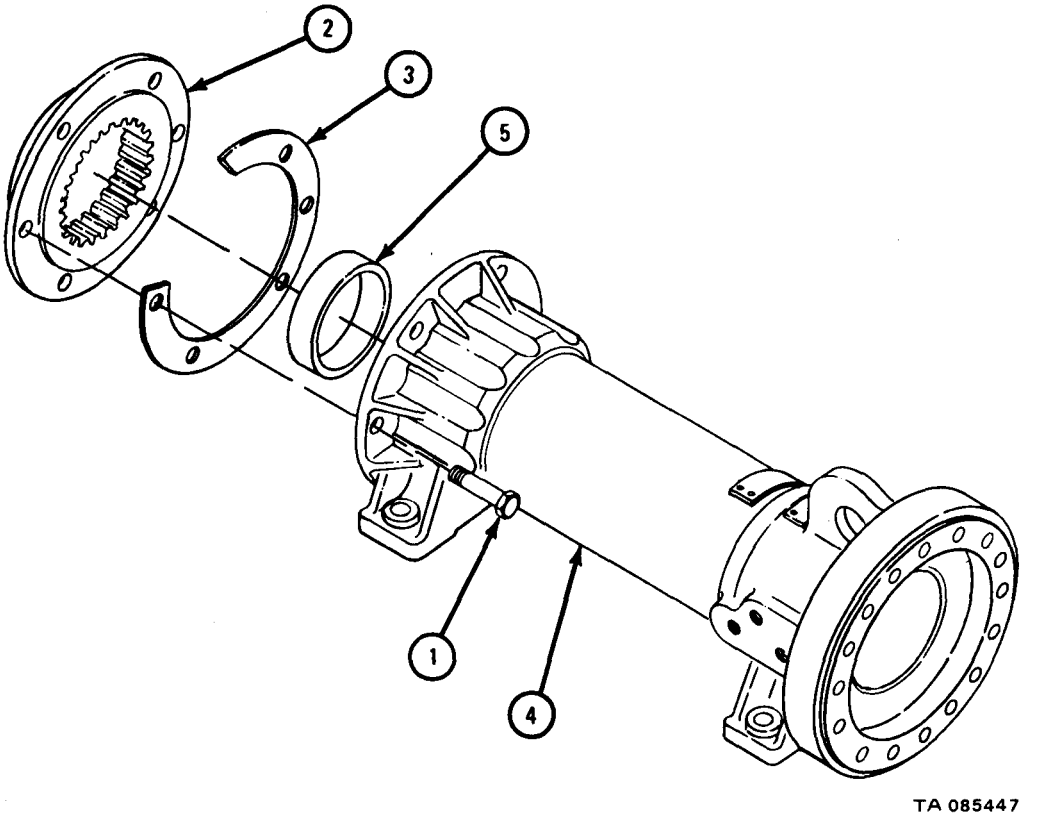

c. Cleaning. There are no special cleaning procedures needed. Refer to cleaning procedures given in Part 1, para 1-3.

NOTE

Clean all parts before inspection and after repair.

d. Inspection and Repair.

FRAME 1

1. Check that clutch case cap ball bearing (1) and two drive sleeve ball bearings (2) are not worn or scored. If bearings are damaged, get new ones in their place.
2. Check that pressure plate release bearing (3) is not worn or scored. If bearing is damaged, take out bearing cup (4) and get a new bearing and bearing cup.

GO TO FRAME 2

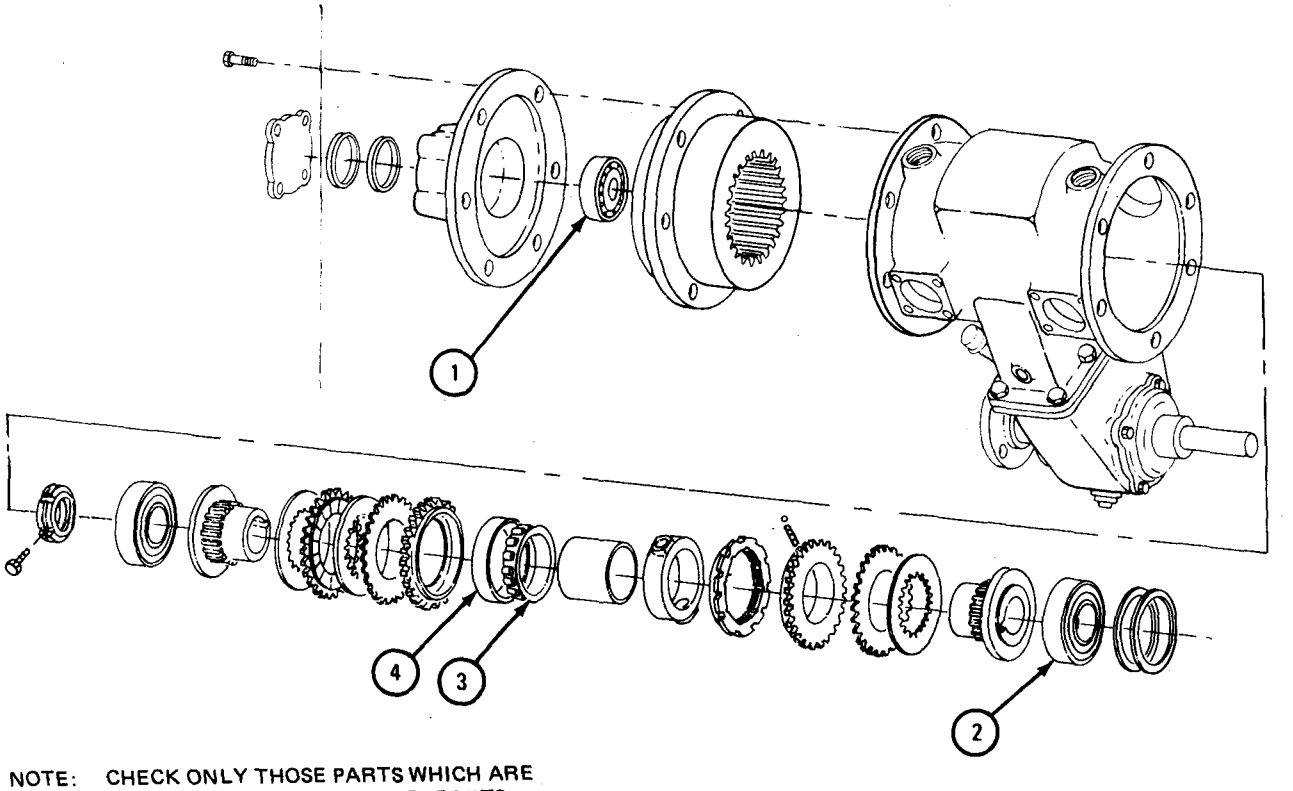

NOTE: CHECK ONLY THOSE PARTS WHICH ARE CALLED OUT IN THIS FRAME. PARTS WITHOUT CALLOUTS ARE SHOWN ONLY FOR REFERENCE PURPOSES OR ARE CHECKED IN ANOTHER FRAME.

TA 085443

FRAME 2

NOTE

Readings must be within limits given in table 17-7. If readings are not within given limits, throw away part and get a new one.

1. Check that gear (1) has no burrs. Take off burrs with a fine mill file or honing stone.
2. Measure thickness of six feed and drive clutch disks with linings (2).
3. Check that all other parts have no wear or damage. If parts are worn or damaged, get new ones in their place.

END OF TASK

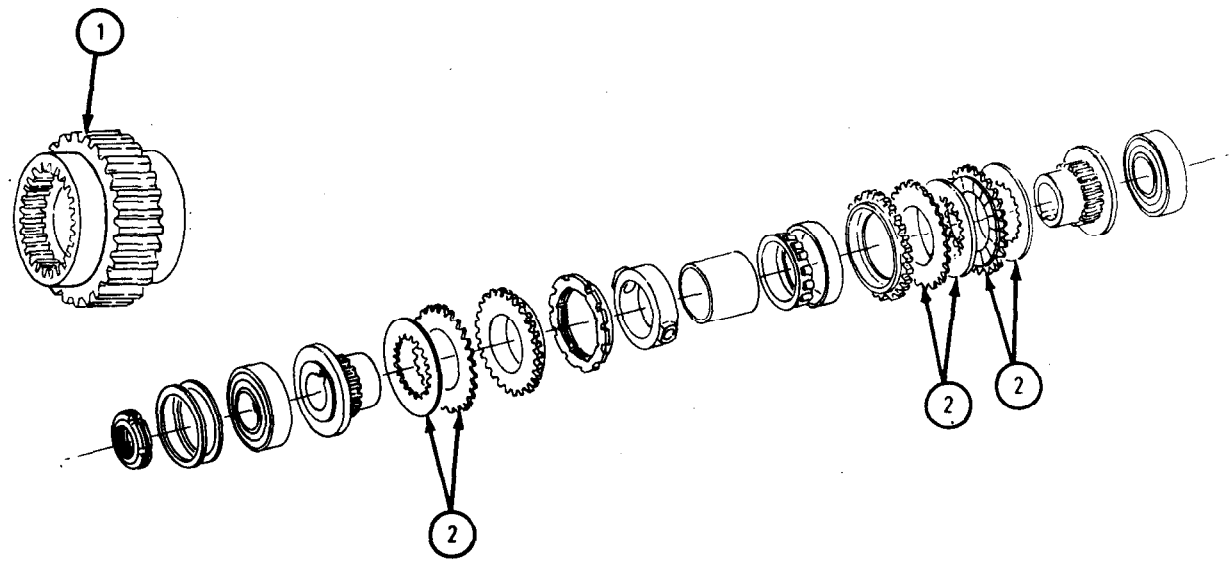

NOTE: CHECK ONLY THOSE PARTS WHICH ARE CALLED OUT IN THIS FRAME. PARTS WITHOUT CALLOUTS ARE SHOWN ONLY FOR REFERENCE PURPOSES OR ARE CHECKED IN ANOTHER FRAME.

TA 085444

Table 17-7. Feed and Drive Clutch Assembly Wear Limits

Index Number	Item/Point of Measurement	Size and Fit of New Parts (inches)	Wear Limits (inches)
2	Feed and drive clutch disk with lining thickness	0.086 to 0.138	None

e. Assembly.

FRAME 1

1. Put bearing (1) on shaft (2) as far as it will go.
2. Slide shaft (2) and coupling assembly three feet into tube assembly (3).

GO TO FRAME 2

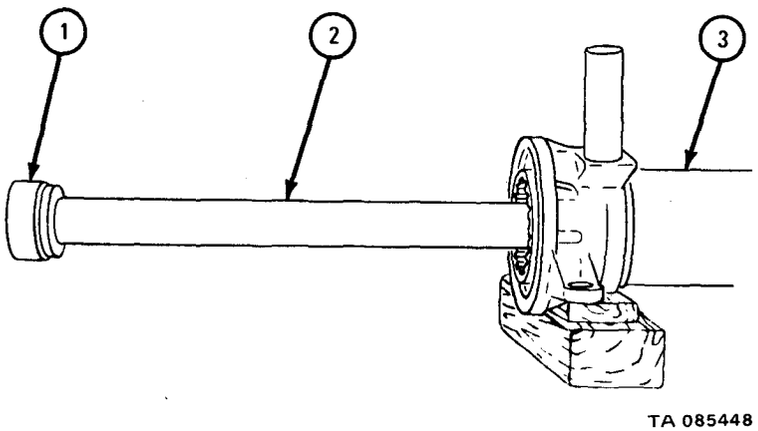

FRAME 2

1. If sleeve (1) was taken out, press in sleeve.
2. Put in gasket (2) and brake shell (3).

GO TO FRAME 3

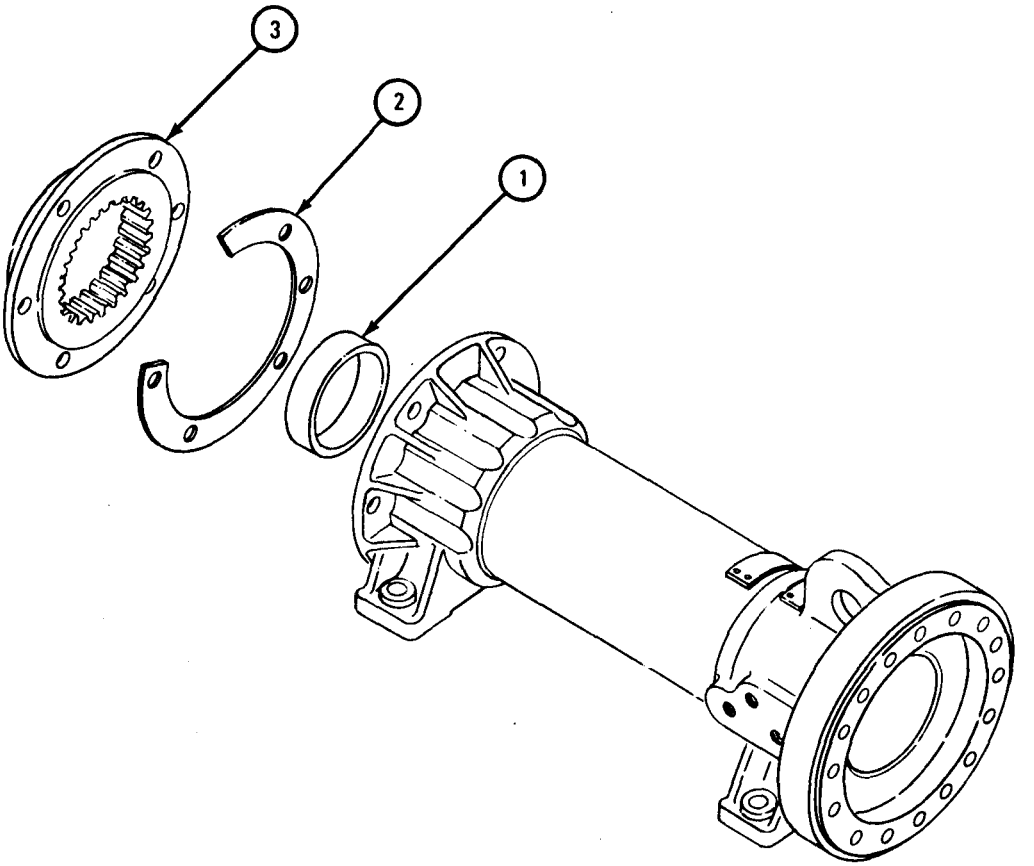

FRAME 3

1. Put in key (1).
2. Put in hub assembly with disks (2) as noted.
3. Put in pressure plate assembly (3) and throw ring (4).
4. Put in bearing sleeve (5) and bearing (6).

Go TO FRAME 4

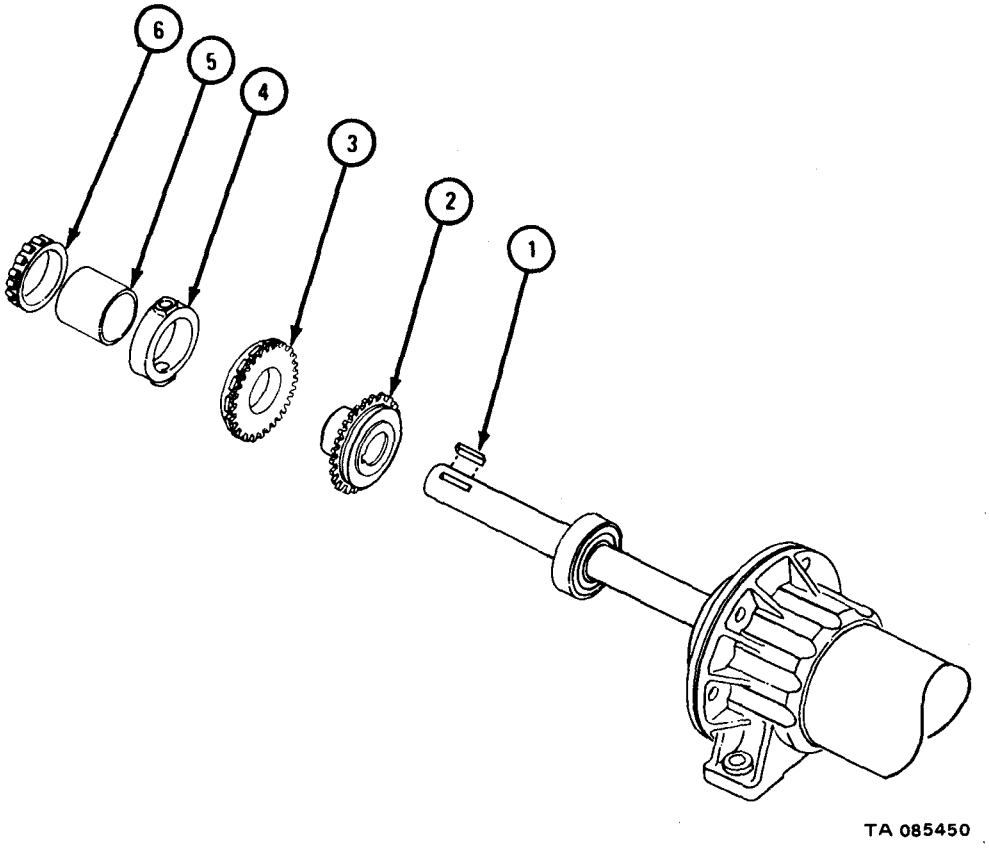

FRAME 4

1. Put in pressure plate with cup (1) and hub assembly with disks (2) as noted.
2. Put in bearing (3).
3. Put in nut (4) and setscrew (5). Put in safety wire (6).
4. Drive shaft (7) into place so that bearing (8) is seated in tube assembly (9).

GO TO FRAME 5

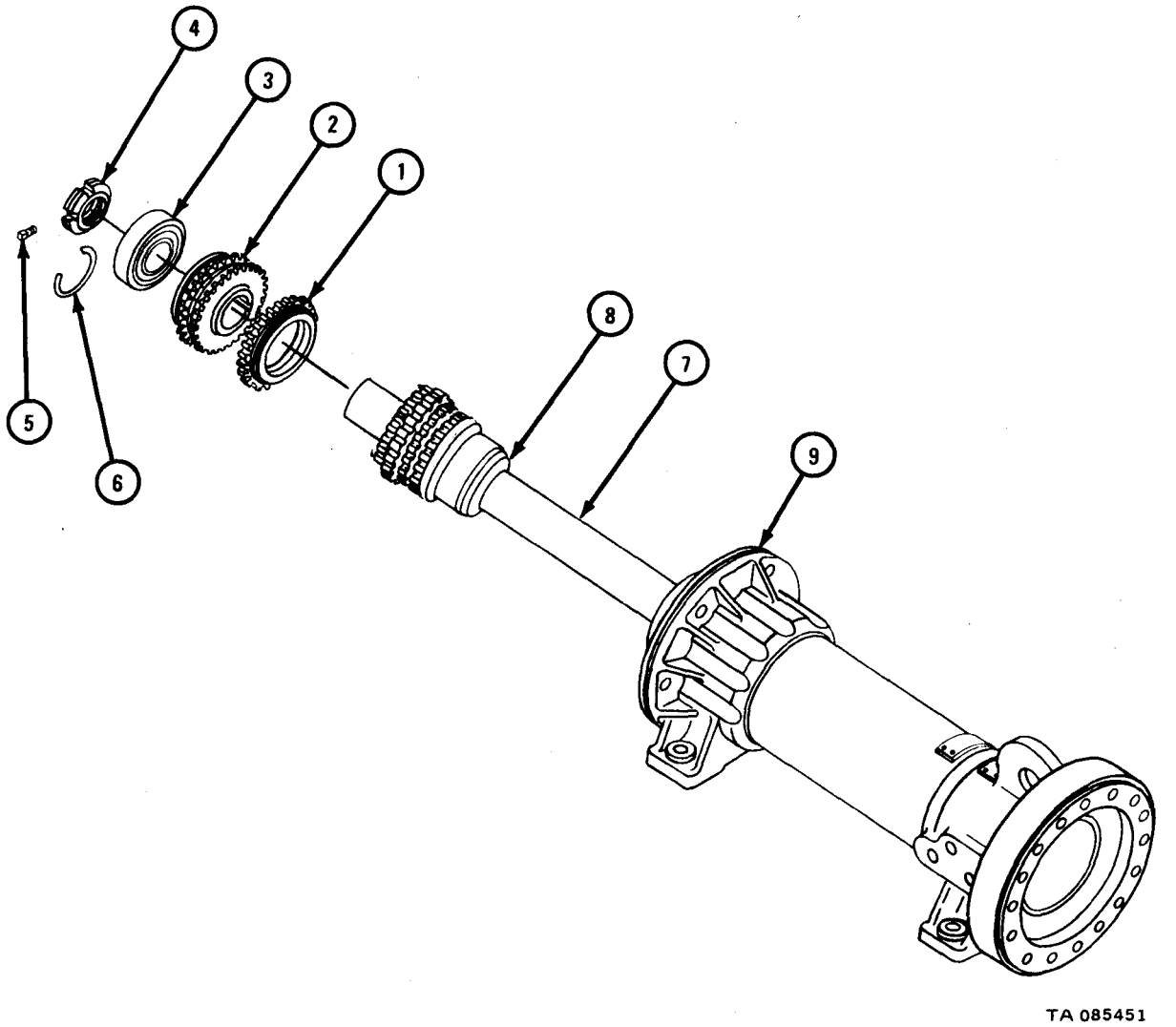

FRAME 5

1. If bearing (1) was taken out, press it onto sleeve (2). Press bearing with sleeve into main drive gear (3).
2. Put in key (4).
3. Slide sleeve (2) with main drive gear onto drive shaft (5).

GO TO FRAME 6

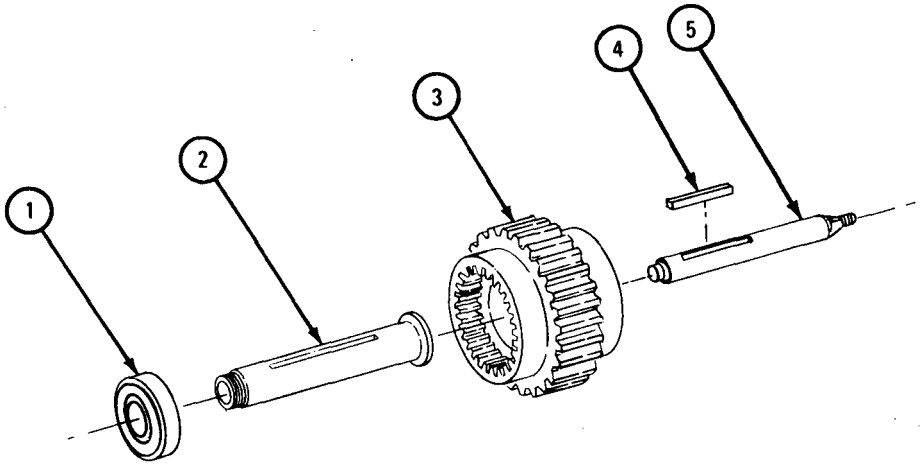

TA 085452

FRAME 6

1. Put in key (1).
2. Put on hub assembly with disks (2) as noted. Put on pressure plate with cup (3).
3. Put on bearing (4) and bearing sleeve (5).
4. Put on throw ring (6) and pressure plate with nut (7).

GO TO FRAME 7

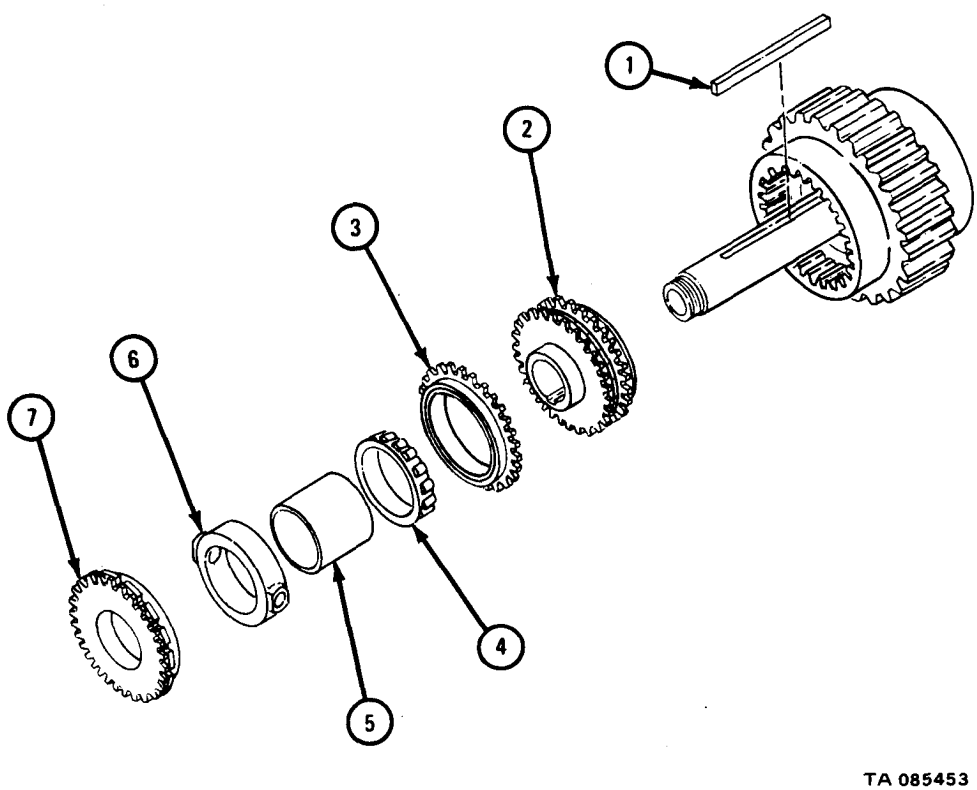

FRAME 7

1. Put in hub assembly with disks (1) as noted.
2. Drive on bearing (2).
3. Put on nut (3), setscrew (4), and safety wire (5).

GO TO FRAME 8

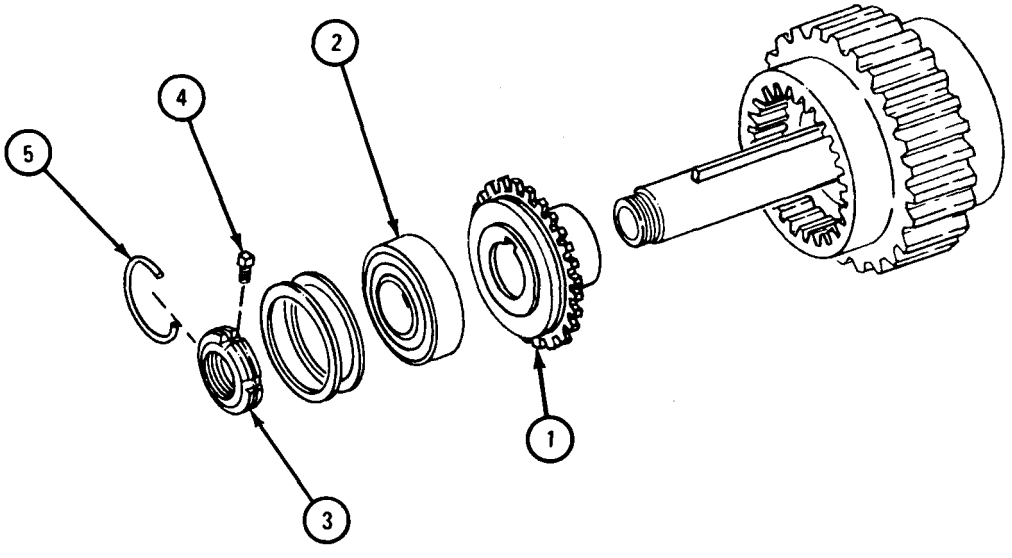

TA 085454

FRAME 8

Soldier A 1. Using hoist, lift clutch case (1) over clutch and brake assembly (2) while soldier B guides it.

Soldier B 2. Slide clutch case (1) over clutch and brake assembly (2).

3. Aline holes in clutch and brake assembly (2) with holes in support tube (3).

4. Put in four screws ad washers (4) and put on four nuts (5).

5. Put in two screws and lockwashers (6).

6. Put in pipe plug (7) and take off hoist and chain sling.

GO TO FRAME 9

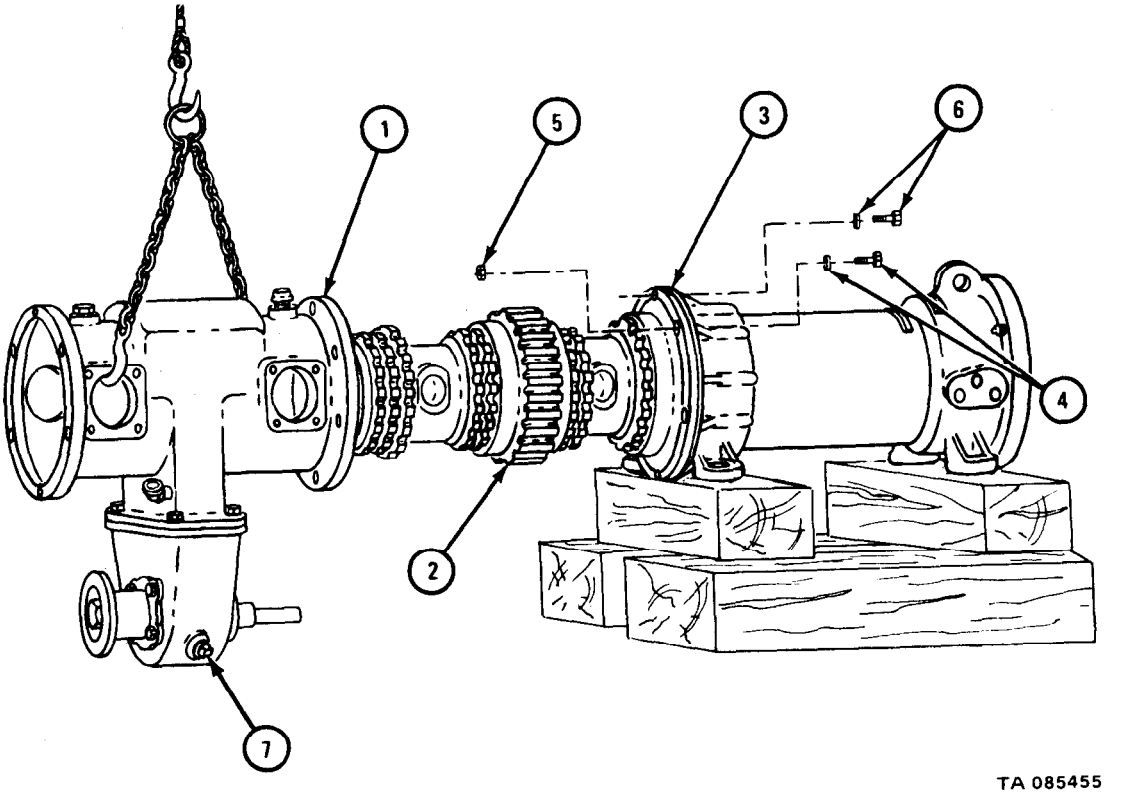

FRAME 9

1. Put on gasket (1) and slide on brake shell (2).
2. Put noted thickness of shim set (3) into clutch case cap (4).
3. Put on gasket (5) and clutch case cap (4).
4. Aline screw holes and put in two capscrews with lockwashers (6).
5. Put in four screws and lockwashers (7). Put on nuts (8).

GO TO FRAME 10

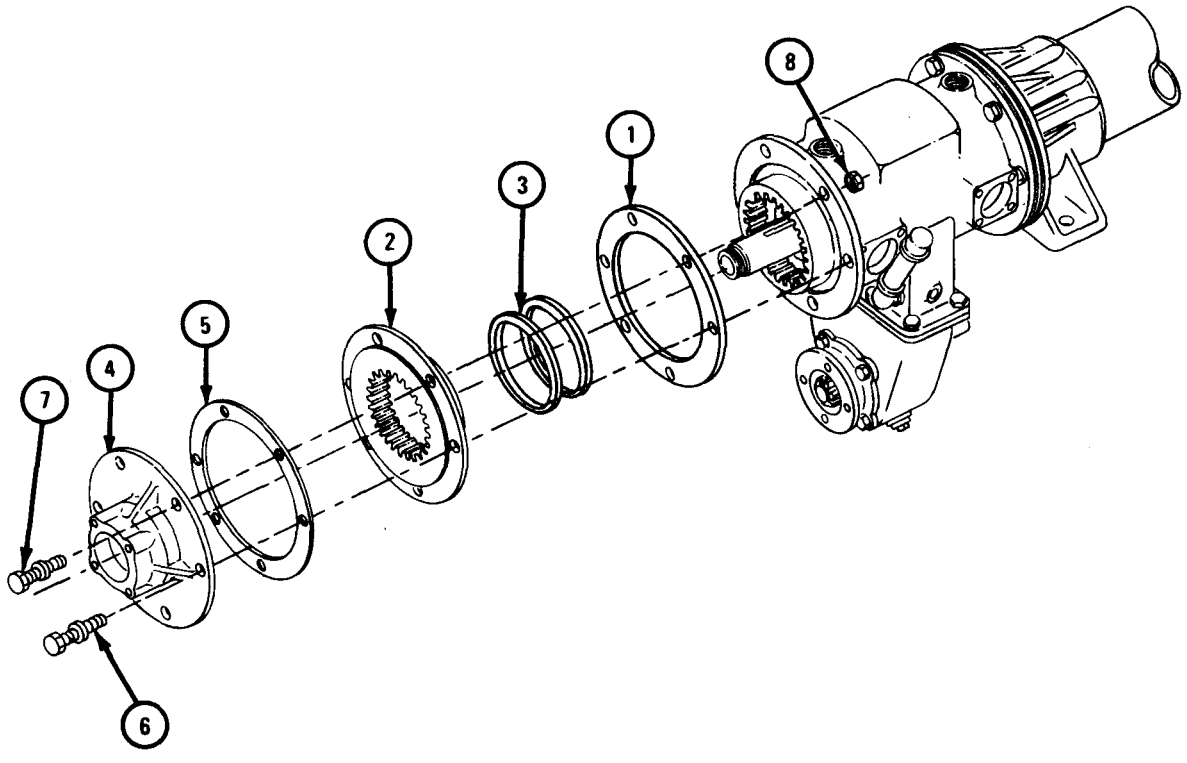

FRAME 10

1. Tap in shaft bearing (1) and put in shim set (2).
2. Put on cap cover gasket (3) and cap cover (4).
3. Put in four screws (5) and lockwashers (6).

GO TO FRAME 11

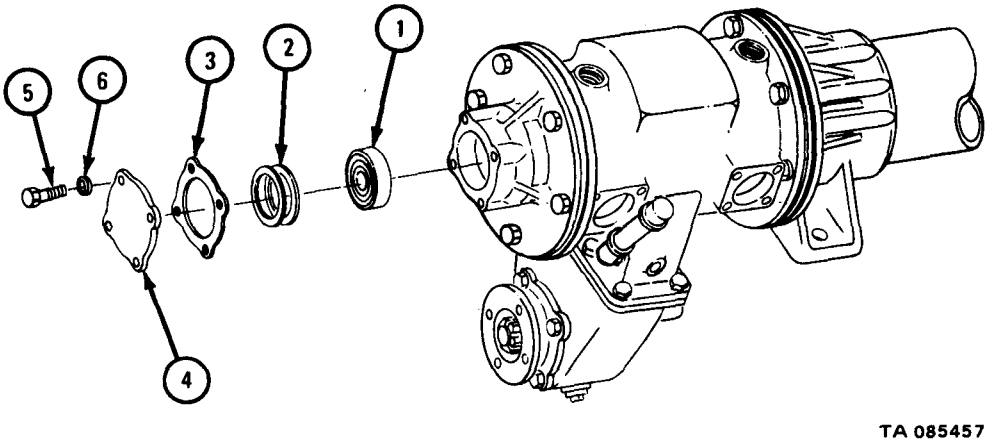

FRAME 11

1. Put on gasket (1). Put on throw cam assembly (2).
2. Put in four screws (3) and lockwashers (4).
3. Put key (5) into keyway on cam assembly (2).
4. Do steps 1, 2, and 3 again for other three throw cam assemblies.
5. Put in nipple (6), elbow (7), and nipple (8).
6. Put in dipstick (9).

GO TO FRAME 12

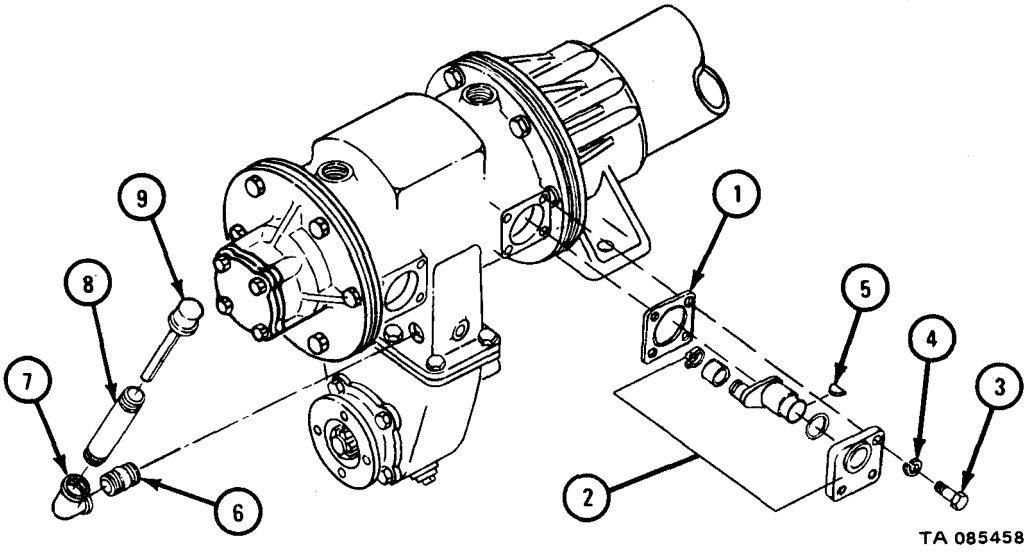

FRAME 12

1. Put on two left cam arms (1).
2. Put on two cross rod beams (2).
3. Tighten two screws (3).
4. Do steps 1, 2, and 3 again for right cam arms.

GO TO FRAME 13

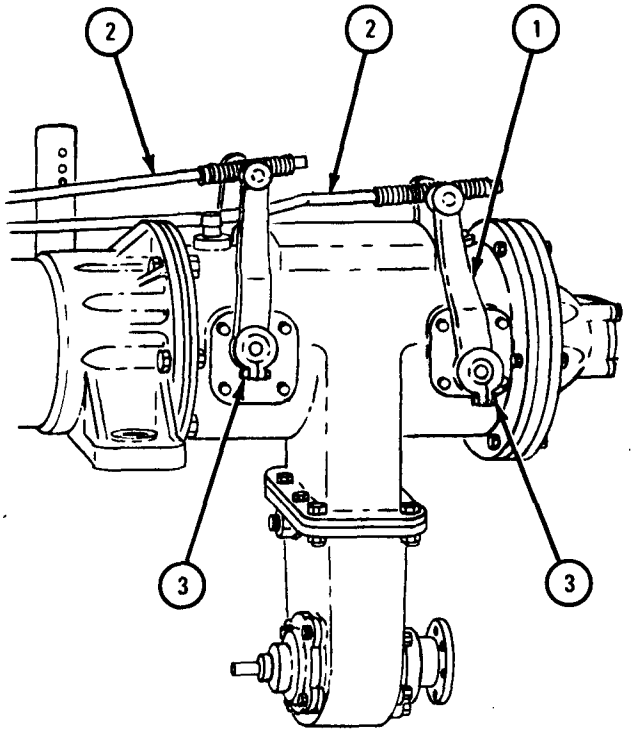

TA 085459

FRAME 13

1. Put on operating controls (1).
2. Put in three screws and lockwashers (2).
3. Put in two clevis pins (3) and cotter pin (4).
4. Put latch (5) on operating controls (1).
5. Put on operator's seat (6) and put in pin (7).

NOTE

Follow-on Maintenance Action Required:

1. Fill boring gearcase. Refer to LO 9-2320-209-12/1.
2. Replace boring case. Refer to para 17-46.

END OF TASK

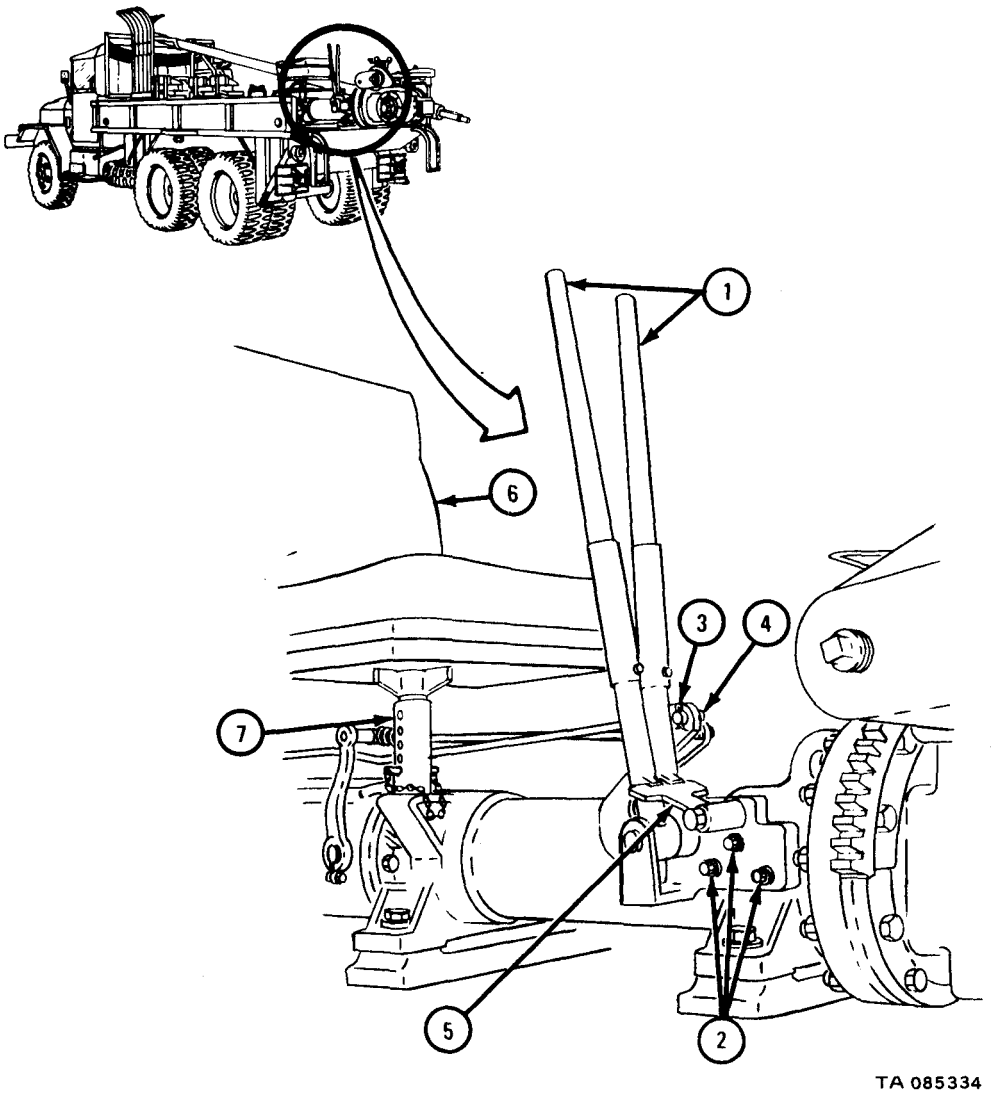

17-53. POWER LEVELER REMOVAL, REPAIR, AND REPLACEMENT (TRUCK M764).

TOOLS: No special tools required.

SUPPLIES: Solvent, dry cleaning, type II (SD-2), Fed. Spec P-D-680
Safety wire, 0.032-inch diameter
Automotive and artillery grease, type GAA, MIL-G-10924

PERSONNEL: One

EQUIPMENT CONDITION: Truck parked, engine off, handbrake set.

a. Preliminary Procedures.

(1) Remove vertical leveling worm drive chains. Refer to TM 9-2320-209-20.

(2) Remove horizontal leveling worm drive chains. Refer to TM 9-2320-209-20.

(3) Remove vertical leveling chain tightening shaft. Refer to TM 9-2320-209-20.

b. Removal.

FRAME 1

1. Take out four screws (1) and lockwashers (2).
2. Take off bracket (3) and spacers (4).

GO TO FRAME 2

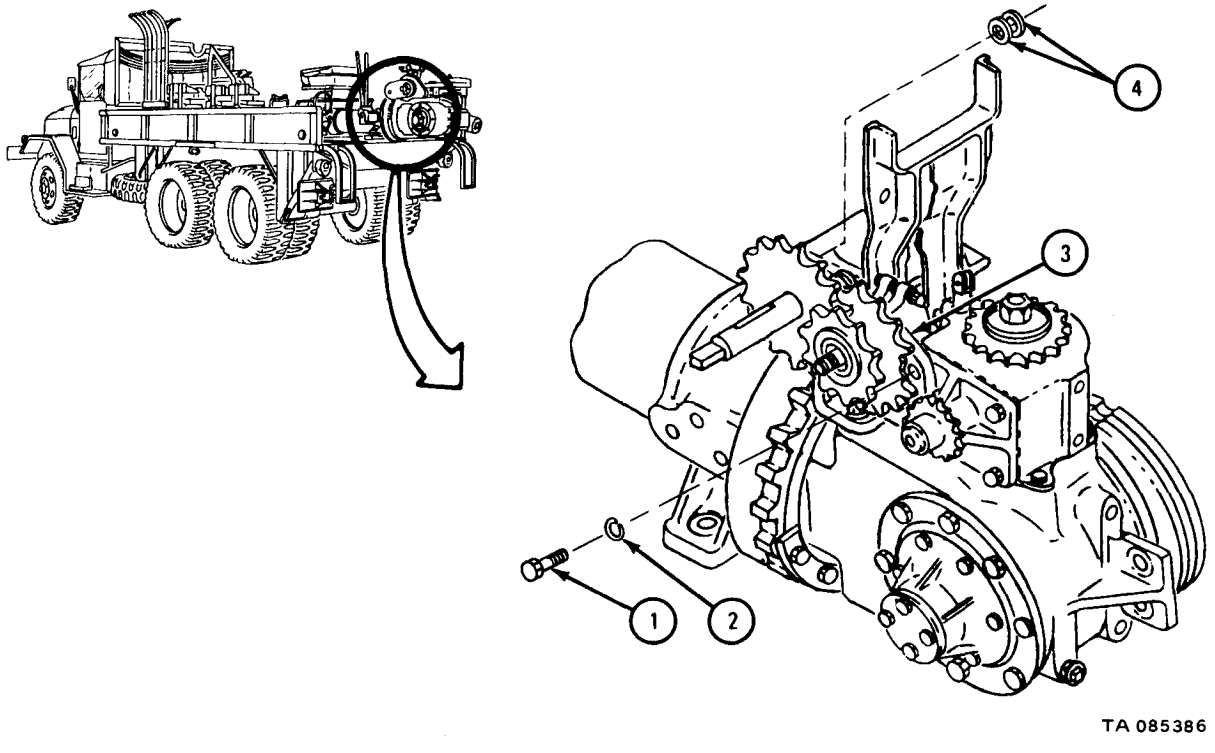

FRAME 2

1. Slide handle (1) into center slot of bracket (2).
2. Take out cotter pin (3) and clevis pin (4).
3. Take out two cotter pins (5) and pins (6).
4. Take rod (7) off clevis (8).

GO TO FRAME 3

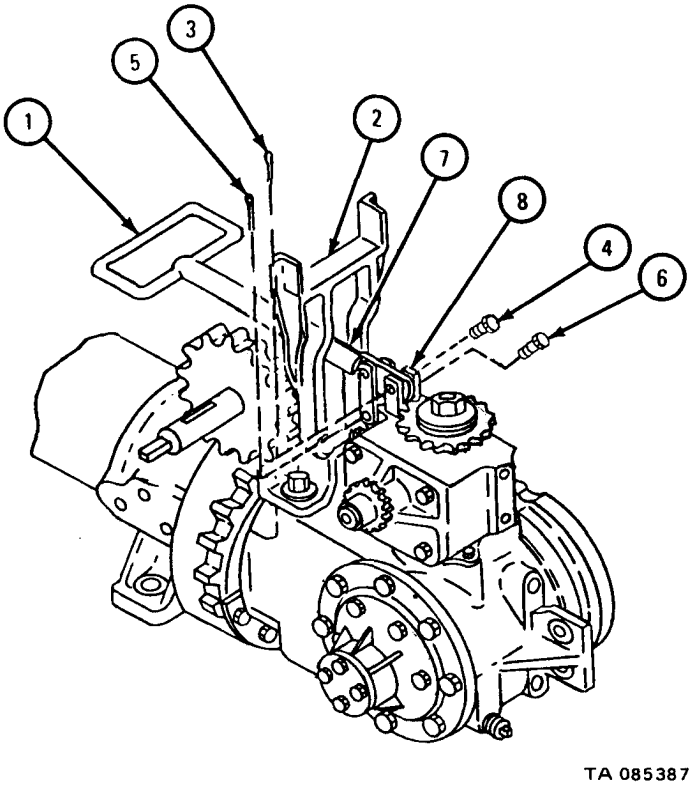

FRAME 3

1. Take off screw (1) and washer (2).
2. Take out stud with washer (3) and take off housing (4).

END OF TASK

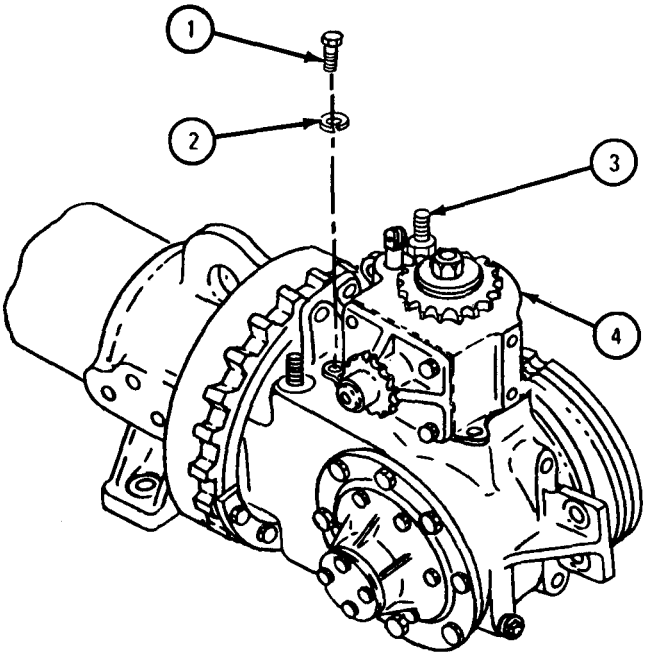

TA 085388

c. Disassembly.

FRAME 1

1. Take off safety wire (1). Loosen setscrew (2). Take off sprocket (3).
2. Take out key (4).
3. Take out two screws (5) and lockwashers (6). Take out cap assembly (7) and shaft (8).
4. Press bearing (9) out of housing cap (10).

GO TO FRAME 2

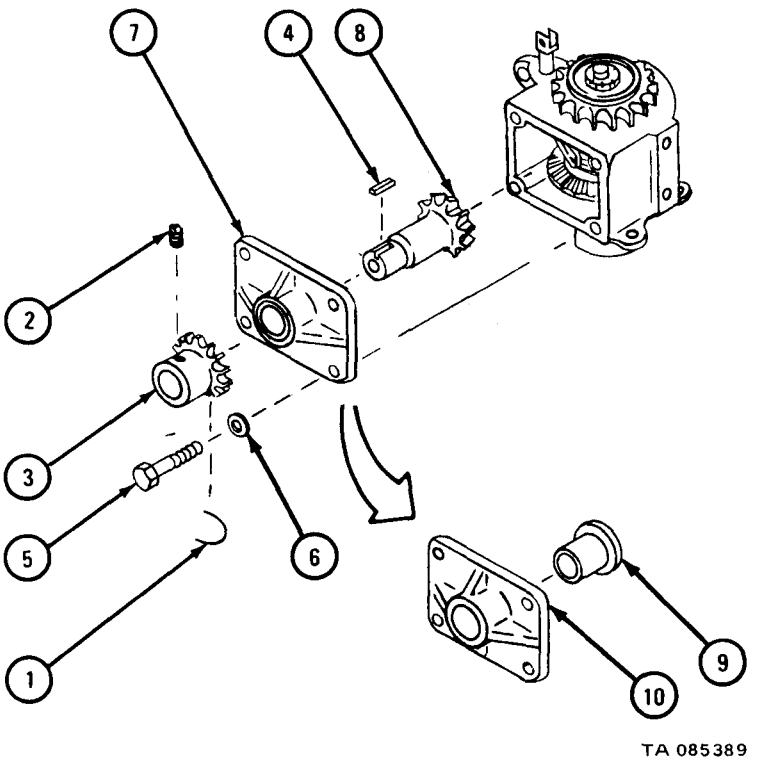

FRAME 2

1. Take grease out of housing (1).
2. Slide pry bar into hole in housing (1) and between teeth of worm drive gear (2) to keep power leveler drive shaft from turning. This helps in loosening nut (3) at end of shaft.
3. Take out cotter pin (4). Take off nut (3) and flat washer (5).
4. Take off gear (6). Take out key (7) and spacer (8).

GO *TO* FRAME 3

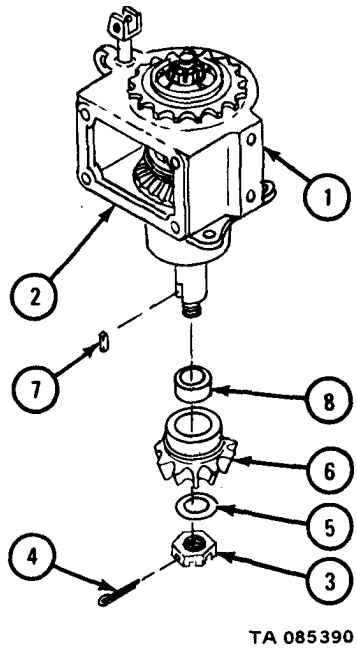

FRAME 3

1. Slide pry bar into hole in housing (1) and between teeth of worm drive gear (2) to keep power leveler drive shaft from turning. This helps in loosening nuts (3) at end of shaft.
2. Take out cotter pin (4). Take out nut (3), bearing retainer (5) and shim set (6).

NOTE

Note needed number and thickness of shims (6) to be sure same shim thickness is put back.

3. Take off sprocket (7) and roller bearing (8). Pull out bearing (9).
4. Take out shaft (10).

GO TO FRAME 4

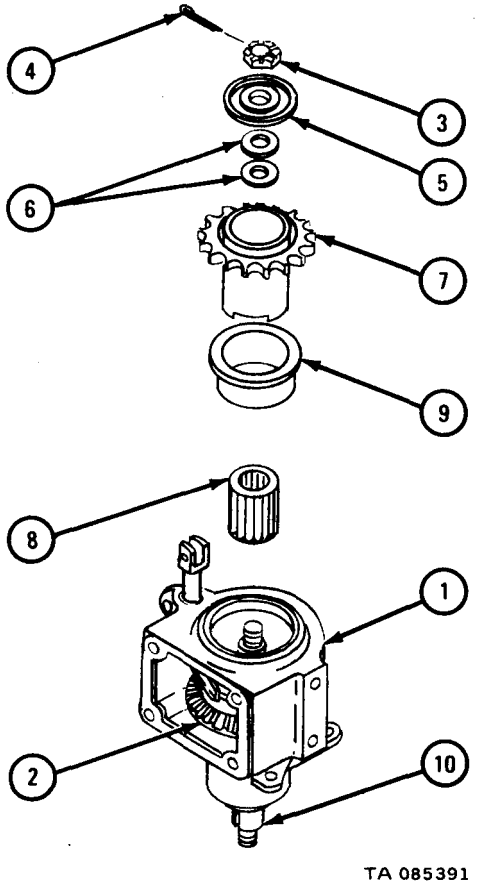

FRAME 4

1. Take out pin (1). Take off nut (2). Take bearing (3) and shim (4) off housing (5).
2. Take out threaded shaft (6), yoke (7), and clutch (8). Take out gear (9). Press out bearing (10).

END OF TASK

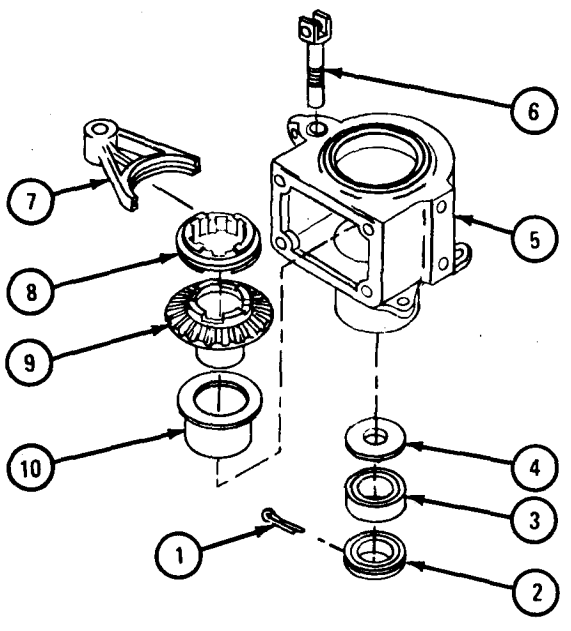

TA 085392

d. Cleaning.

(1) Clean all bearings. Refer to Part 1, para 10-8.

(2) There are no special cleaning procedures needed for all other parts. Refer to cleaning procedures given in Part 1, para 1-3.

e. Inspection and Repair.

FRAME 1

1. Check that sprocket (1) and clutch (2) have no cracks, breaks or other damage. If parts are damaged, get new ones.
2. Check that gear (3), and shaft (4) have no cracks, breaks or other damage. If parts are damaged, get new ones.
3. Check that housing (5) has no cracks, breaks or other damage. If part is damaged, get a new one.

GO TO FRAME 2

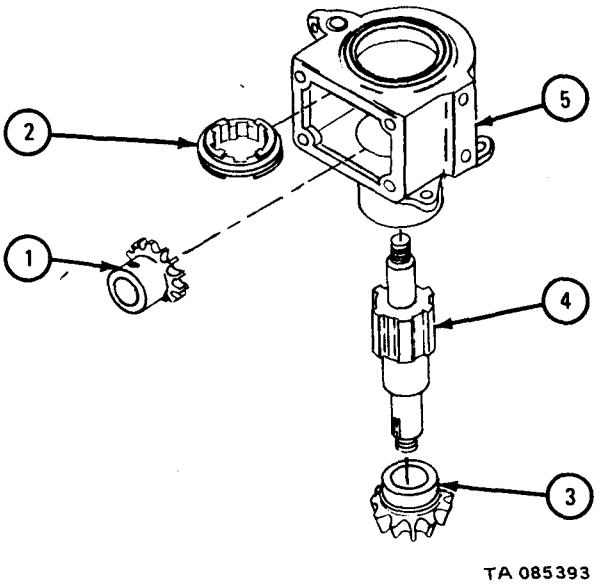

FRAME 2

NOTE

If part is damaged beyond repair, get new one.

1. Check that outside diameters of worm gear (1), pinion shaft (2), and chain sprocket (3) is within wear limits. Refer to table 17-8. If parts are worn beyond wear limits given, get new ones.
2. Check that worm gear (1), pinion shaft (2), and chain sprocket (3) have no cracks, breaks or other damage. Using crocus cloth, rub out minor burrs. If damage cannot be repaired with crocus cloth, get new part.

END OF TASK

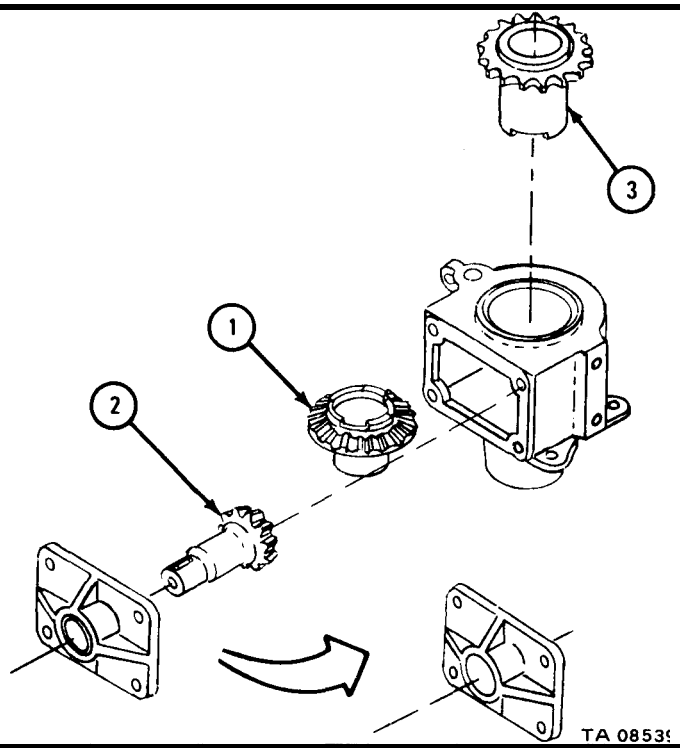

NOTE: CHECK ONLY THOSE PARTS WHICH ARE CALLED OUT. PARTS WITHOUT CALLOUTS ARE SHOWN ONLY FOR REFERENCE PURPOSES.

Table 17-8. Power Leveler Wear Limits (L means loose fit)

Index Number	Item /Point of Measurement	Size and Fit of New Parts (inches)	Wear Limits (inches)
1	Worm gear (outside diameter)	2.247 to 2.249	2.242 to 2.245
2	Pinion shaft (outside diameter)	1.376 to 1.377	1.366 to 1.367
3	Chain sprocket (outside diameter)	2.873 to 2.874	2.866 to 2.869
1	Fit of gear in bearing	0.004L	None
2	Fit of shaft in bearing	0.001L to 0.005L	None
3	Fit of sprocket in bearing	0.001L to 0.003L	None

f. Assembly.

FRAME 1

NOTE

Pack all bearings with grease.

1. Press in bearing (1). Put in gear (2). Put in clutch (3), yoke (4), and shaft (5).
2. Put shim (6), bearing (7), nut (8), and cotter pin (9) into housing (10).

GO TO FRAME 2

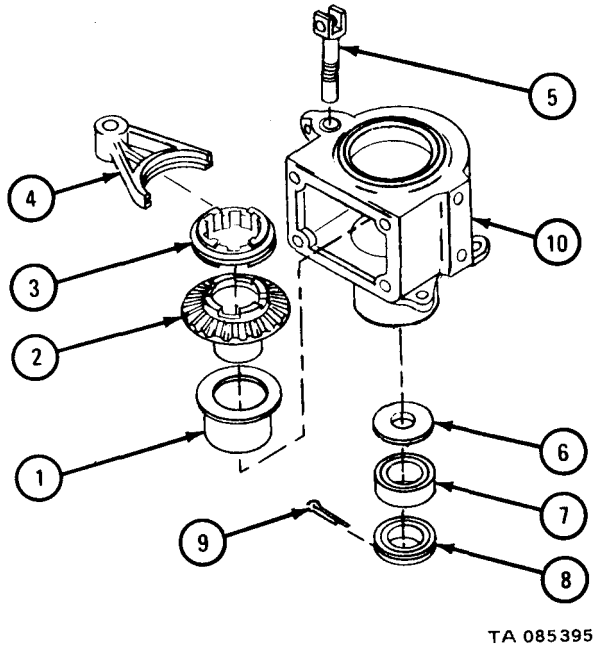

FRAME 2

1. Put shaft (1) into housing (2). Put in bearing (3), roller bearing (4), and sprocket (5).
2. Put in shim set (6), retainer (7), nut (8), and cotter pin (9).

GO TO FRAME 3

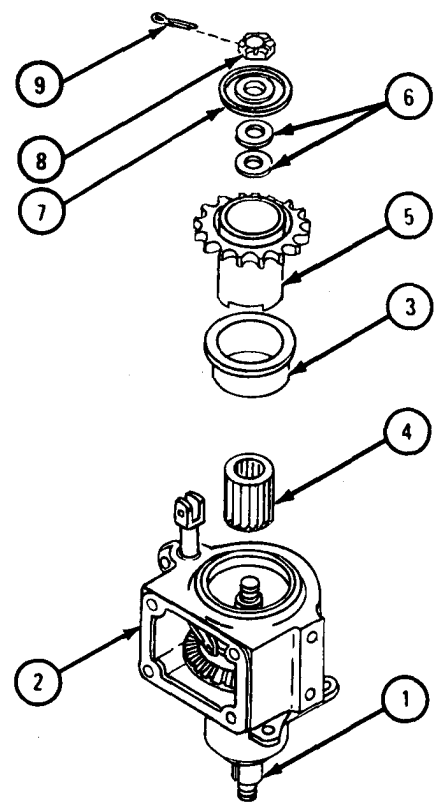

TA 085396

FRAME 3

1. Put on spacer (1) and key (2). Put in gear (3).

NOTE

Put in pry bar through hole in housing (4) and press worm drive gear (5) to keep leveler drive shaft from turning. This helps in tightening nut (6) at end of shaft.

2. Put in flat washer (7), nut (6), and cotter pin (8).
3. Put grease into housing (4).

GO TO FRAME 4

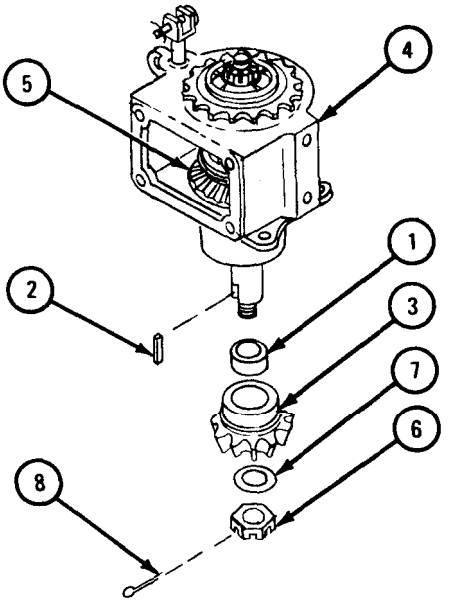

TA 085397

FRAME 4

1. Put bearing (1) into cap housing (2).
2. Put shaft (3) into housing (4). Put cap housing (2) on shaft.
3. Put key (5) into shaft (3). Put two lockwashers (6) on screws (7). Put in screws through cap housing (2).
4. Put sprocket (8) on shaft (3). Tighten setscrew (9). Put on safety wire (10).

END OF TASK

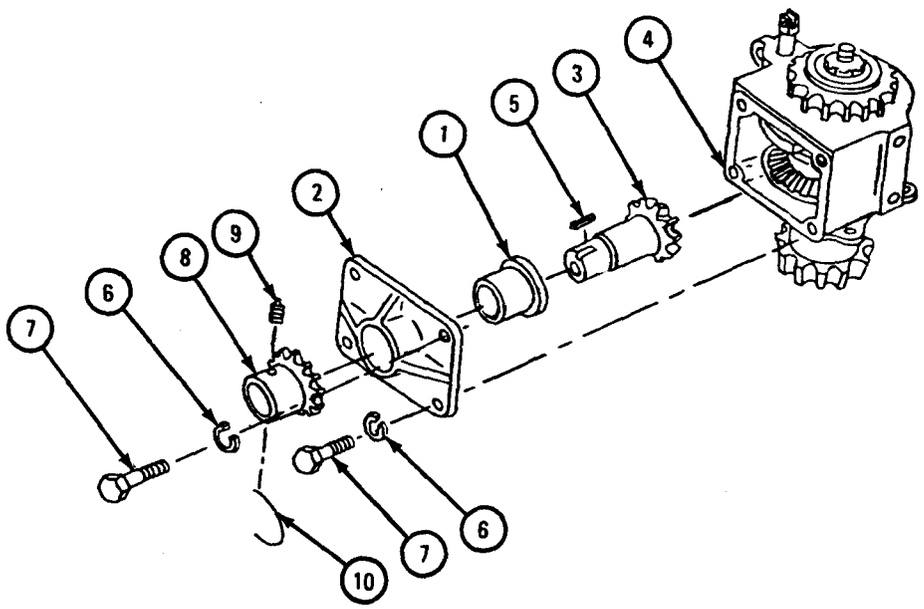

g. Replacement.

FRAME 1

1. Put on housing (1).
2. Put in washer (2) and screw (3).
3. Put in stud (4) and washer (5).

GO TO FRAME 2

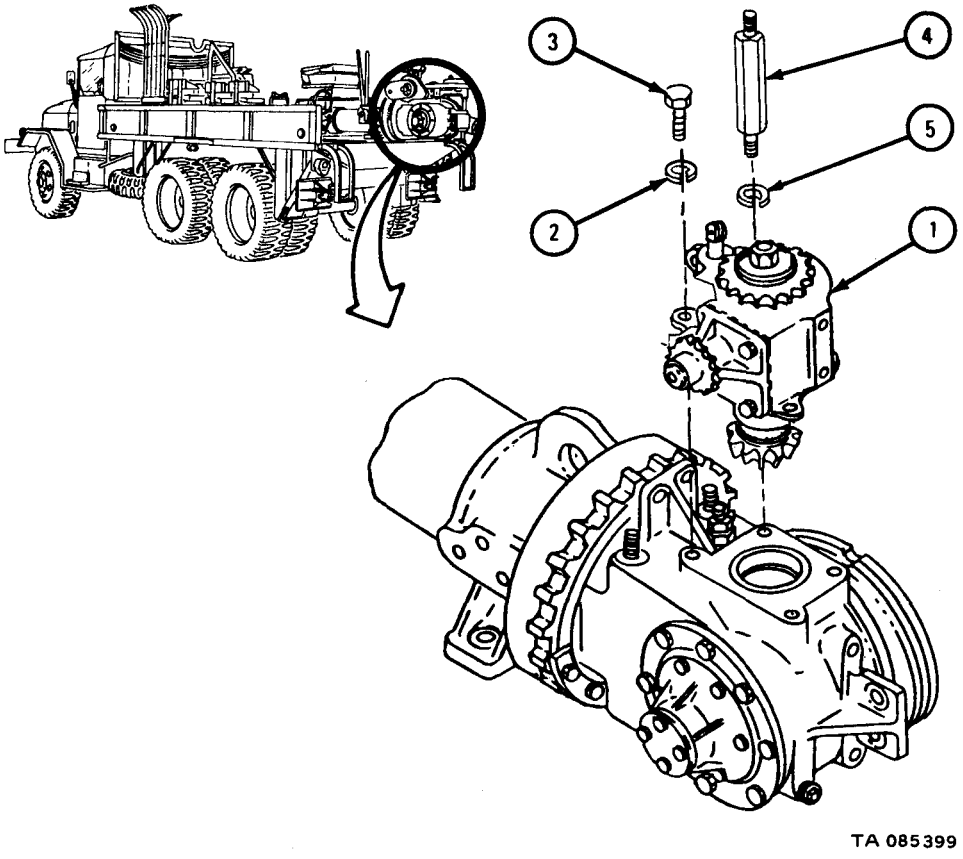

FRAME 2

1. Put in rod (1). Put in clevis pin (2) and cotter pin (3).
2. Put in pin (4) and cotter pin (5).

GO TO FRAME 3

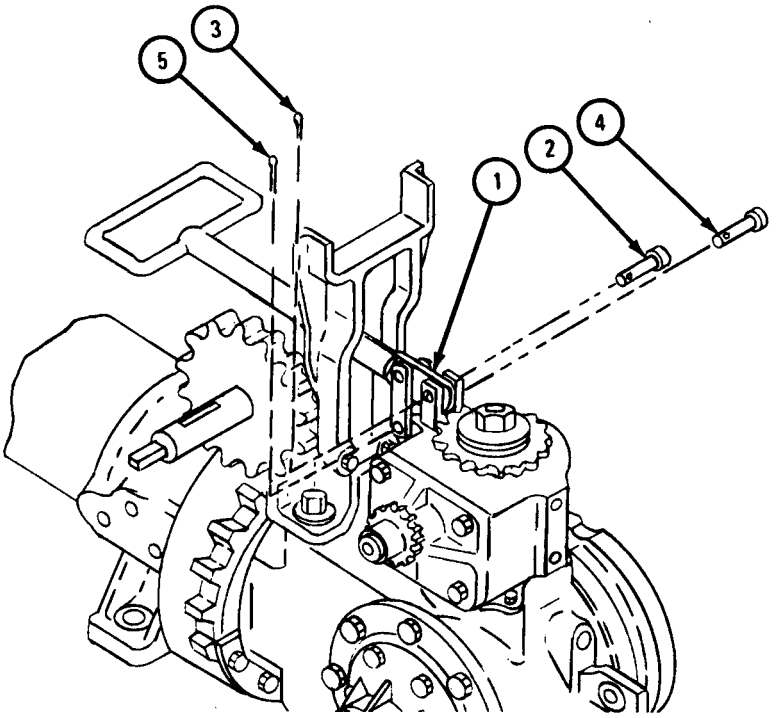

TA 085400

FRAME 3

1. Put on bracket (1) and spacers (2). Put in four screws (3) and washers (4) on housing (5).

NOTE

Follow-on Maintenance Action Required:

1. Replace vertical leveling chain tightening shaft bracket. Refer to TM 9-2320-209-20.
2. Replace horizontal leveling worm drive chains. Refer to TM 9-2320-209-20.
3. Replace vertical leveling worm drive chains. Refer to TM 9-2320-209-20.

END OF TASK

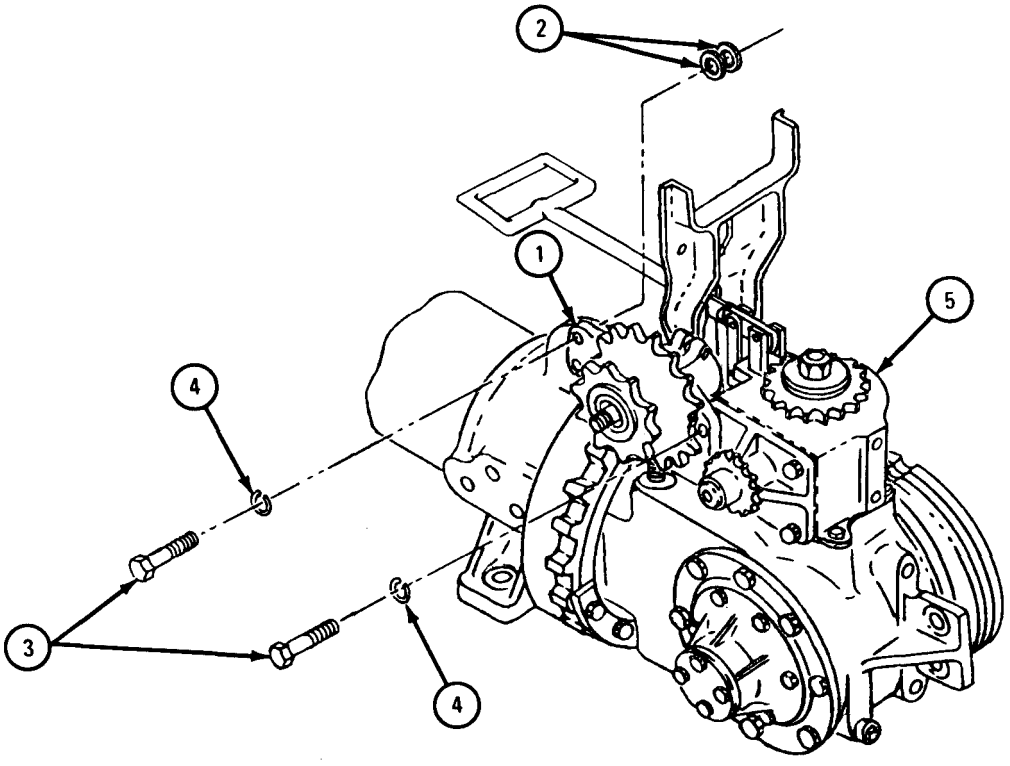

17-54. OUTRIGGER LEGS REMOVAL, REPAIR, AND REPLACEMENT (TRUCK M764).

NOTE

This task is the same for the left and right outrigger legs. This task is shown for the right outrigger leg.

TOOLS: No special tools required

SUPPLIES: Tags
Plugs

PERSONNEL: Four

EQUIPMENT CONDITION: Truck parked, engine off, handbrake set.

a. Preliminary Procedures.

(1) Take off rear splash shield and braces. Refer to para 17-69.

(2) Jack Up and support rear axle. Refer to TM 9-2320-209-20.

(3) Remove inner and outer rear wheels. Refer to TM 9-2320-209-10.

b. Removal.

FRAME 1

1. Take off hydraulic cylinder supply hose (1) and return hose (2). Plug and tag hoses (1 and 2) so they will be put back in the same place.
2. Take out screw (3) and take off clamp (4) on hoses (1 and 2).

GO TO FRAME 2

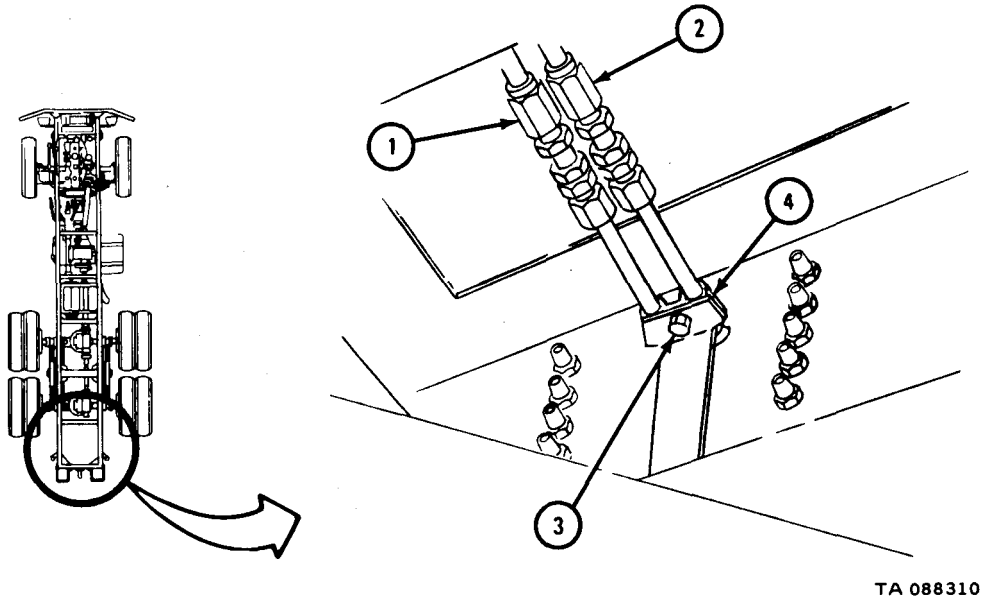

FRAME 2

WARNING

Leg assembly (1) is very heavy and must be properly supported and balanced on floor jack before taking out mounting screws (2). If care is not taken, assembly can fall and injure personnel and damage equipment.

Soldier A 1. Take shoe (3) out of bracket (4).

Soldier B 2. Hold screws (2) when soldier A takes off nuts (5).

Soldier A 3. Take off 20 nuts (5).

Soldier B 4. Take out 16 of 20 screws (2). Leave in four screws (2), two on each side of leg assembly (1) to keep it from shifting.

CAUTION

Be careful when pulling leg assembly (1) away from truck. Cylinder lines can be easily damaged.

Soldiers A and B 5. Holding leg assembly (1), take out four screws (2).

Soldiers A, B, C, and D 6. While soldiers C and D move jacks and supports, soldiers A and B move leg assembly (1) away from truck.

7. Carry leg assembly (1) to workbench.

END OF TASK

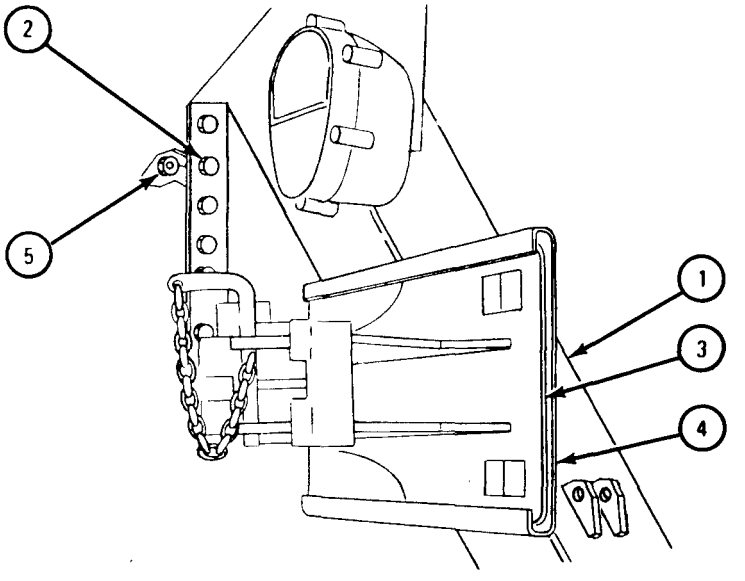

TA 088311

c. Disassembly.

FRAME 1

1. Take off snapring (1) and slide out pin (2).

CAUTION

Be careful when pulling lower leg (4) from upper leg (5). Cylinder lines can be easily damaged.

2. Lift latch (3) and slide lower leg (4) out of upper leg (5) in direction of arrow.
3. Take out setscrew (6) and trunnion tube (7).
4. Take out hydraulic cylinder (8).

GO TO FRAME 2

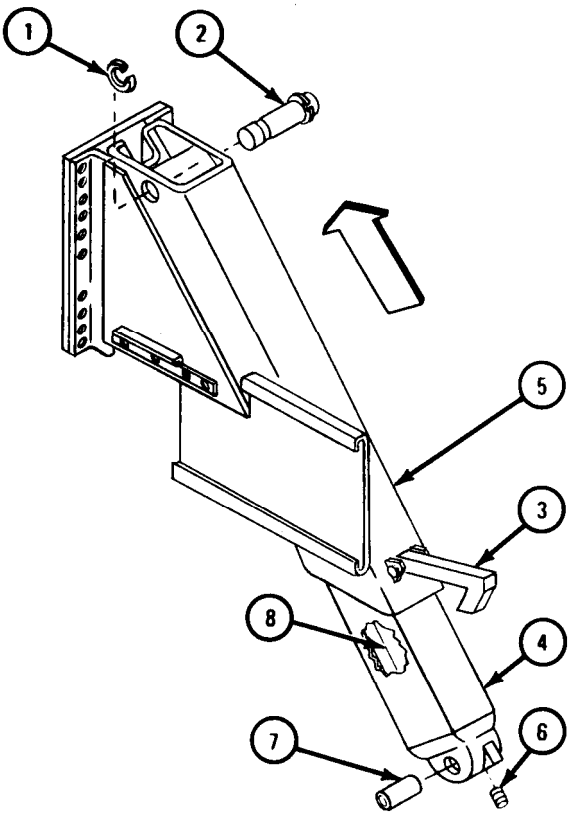

TA 088312

FRAME 2

1. Take ff screw (1), nut (2), and latch (3).

END OF TASK

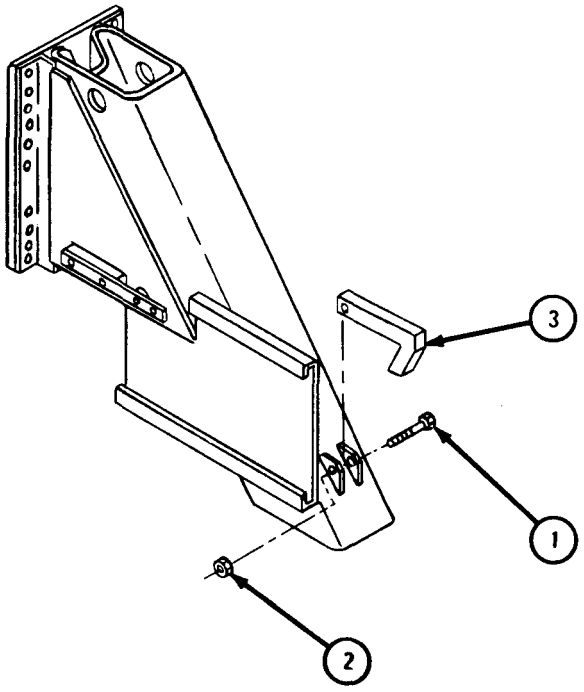

TA 088313

d. Cleaning. There are no special cleaning procedures needed. Refer to cleaning procedures given in Part 1, para 1-3.

NOTE

CIean all parts before inspection and before assembly.

e. Inspection and Repair.

FRAME 1

1. Check that upper leg (1), lower leg (2), shoe (3), pin (4), and latch (5) have no cracks, bends or broken welds. Refer *to* TM 9-237 for welding procedures.
2. Check that trunnion tube (6) and pin (7) are not worn or damaged. If parts are damaged or worn, get new ones in their place.
3. Check that all nuts (8) and bolts (9) have no damaged threads or heads. If parts are damaged or worn, get new ones in their place.

END OF TASK

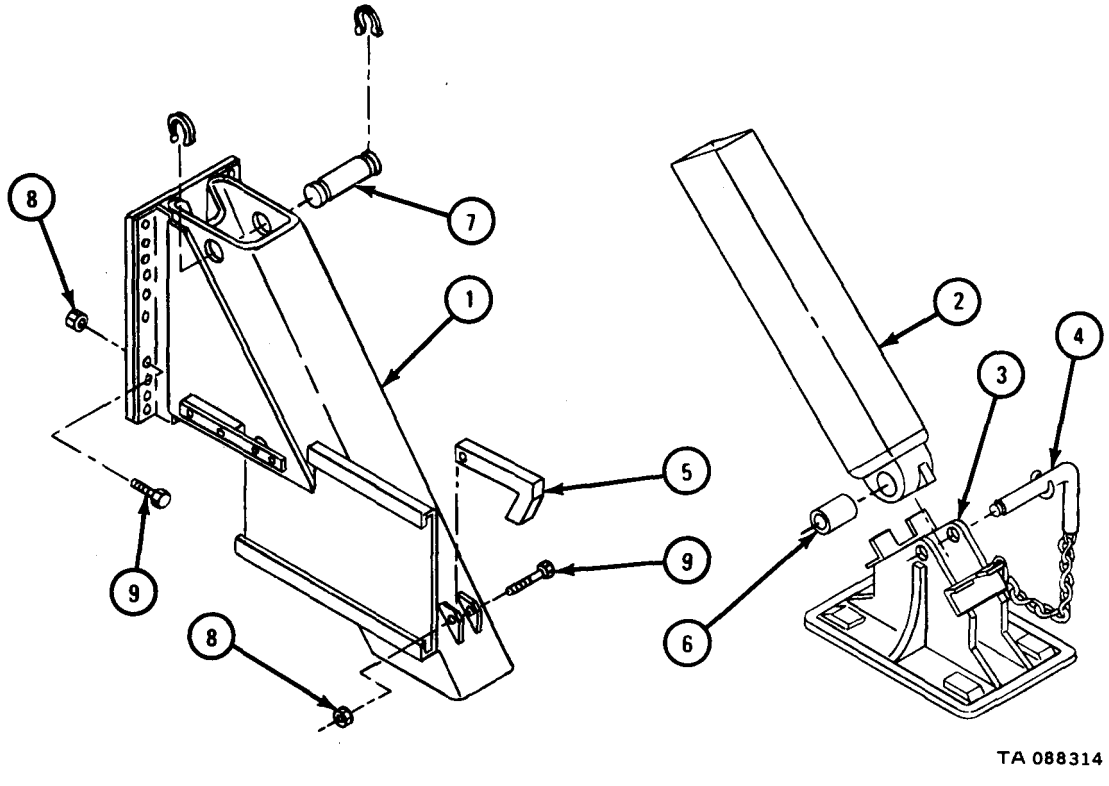

f. Assembly.

FRAME 1

CAUTION

Be careful not to damage cylinder lines when putting hydraulic cylinder assembly (1) into lower outrigger leg (2).

1. Put hydraulic cylinder (1) into lower leg (2).
2. Put trunnion tube (3) through lower leg (2) and hydraulic cylinder (1).
3. Put in setscrew (4).
4. Put lower leg (2) into upper leg (5) in direction of arrow.
5. Put pin (6) through upper leg (5) and hydraulic cylinder (1).
6. Put snapring (7) on end of pin (6).

GO TO FRAME 2

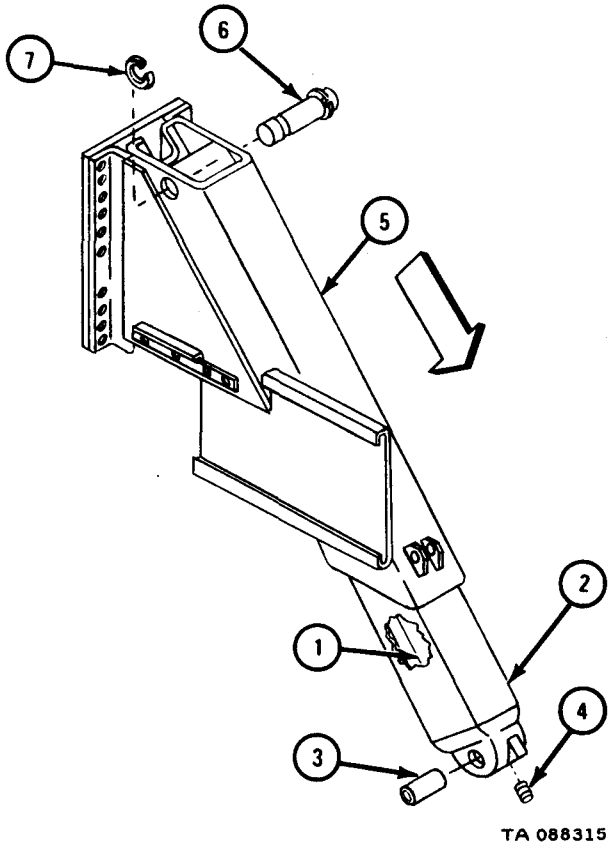

FRAME 2

1. Aline latch (1) with holes in upper leg (2).
2. Put in screw (3) and put on nut (4).

END OF TASK

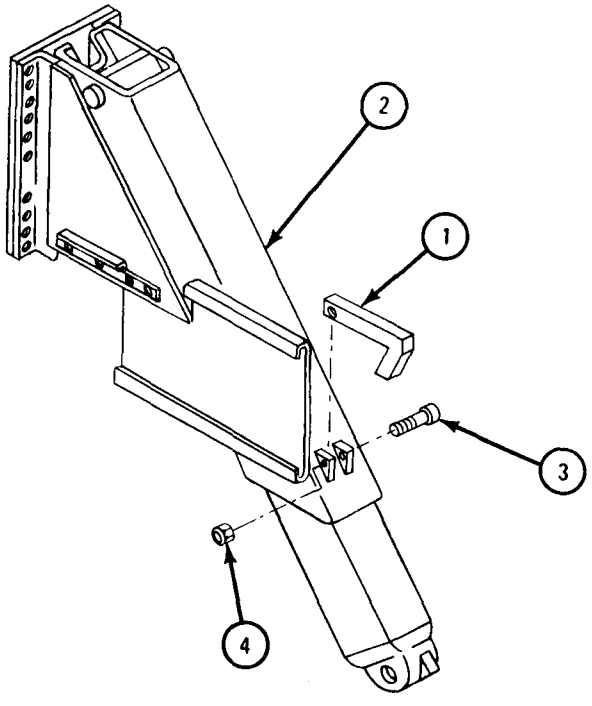

TA 088316

g. Replacement.

FRAME 1

WARNING

Leg assembly (1) must be properly held up and balanced when putting it back. If care is not taken, assembly could fall and injure personnel and damage equipment.

CAUTION

Be careful not to damage cylinder lines when putting in leg assembly (1).

Soldiers A, B, C, and D	1.	Move jack with leg assembly (1) up to truck frame (2) and aline holes in leg assembly with holes in truck frame.
Soldier A	2.	Put in 20 screws (3).
Soldier B	3.	Put on 20 nuts (4).
	4.	Put shoe (5) in shoe bracket (6).

GO TO FRAME 2

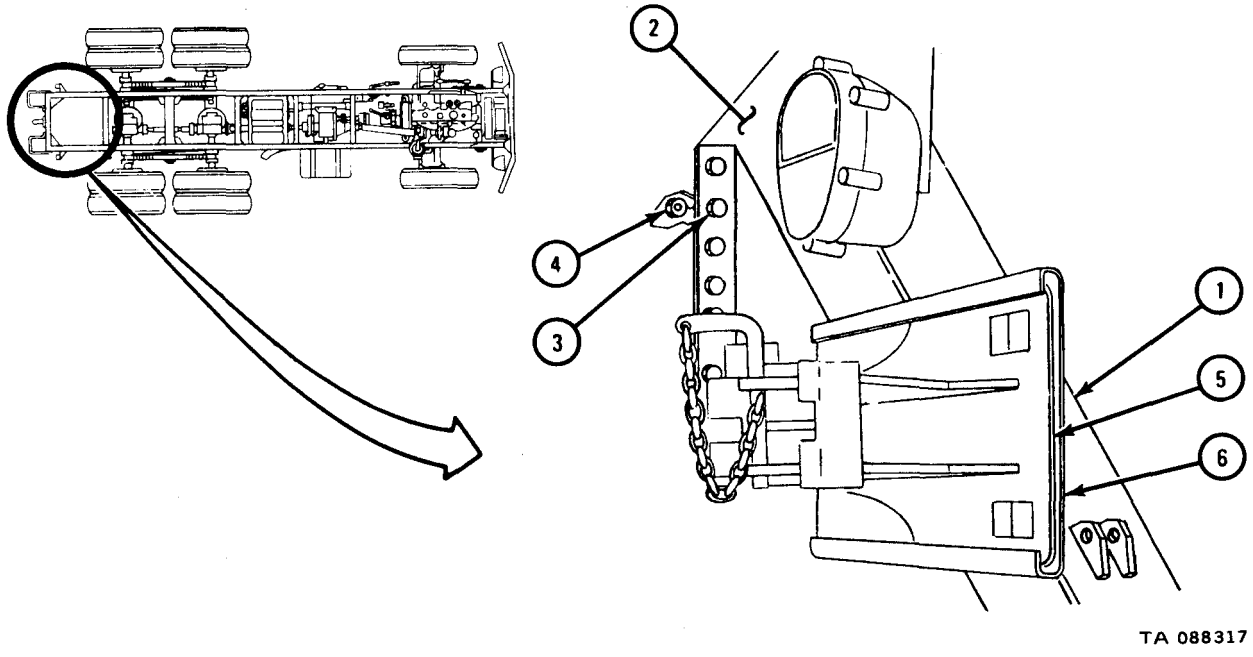

FRAME 2

1. Put screw (1) through clamp bracket (2).
2. Put clamp (3) over supply hose (4) and return hose (5) and tighten screw (1).
3. Unplug and finger tighten supply hose (4) and reurn hose (5) as tagged. Tighte-n couplings 1/8 turn with wrench. Take off tags.

NOTE

Follow-on Maintenance Action Required:

1. Put in hydraulic fluid. Refer to LO 9-2320-209-12/1.
2. Replace rear splash shield and braces. Refer to para 17-69.
3. Replace inner and outer rear wheels. Refer to TM 9-2320-209-10.

END OF TASK

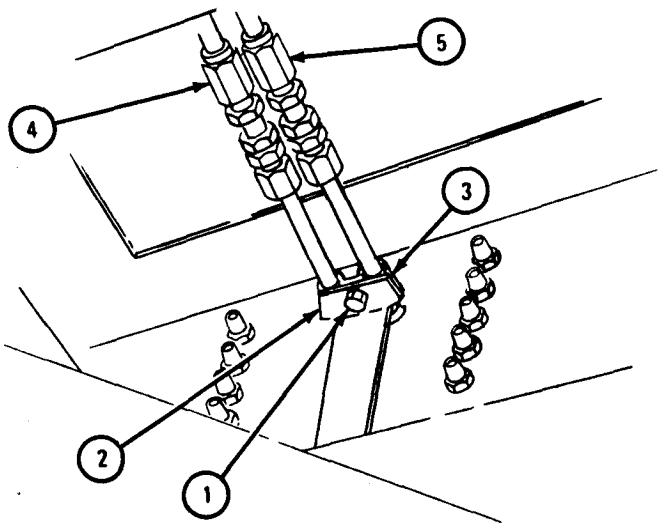

TA 088318

17-55. OUTRIGGER LEG HYDRAULIC CYLINDER REMOVAL, REPAIR, REPLACEMENT, AND TEST (TRUCK M764).

NOTE

This task is the same for the left and right outrigger leg hydraulic cylinders. This task is shown for the right outrigger leg hydraulic cylinder.

TOOLS: No special tools required

SUPPLIES: Cotter pin
Lubricating oil, ICE, OE/HDO 10, MIL-L-2104

PERSONNEL: One

EQUIPMENT CONDITION: Truck parked, engine off, handbrake set.

a. Preliminary Procedure. Remove outrigger leg assembly. Refer to para 17-54.

b. Removal.

FRAME 1

1. Take off snapring (1) and slide out pin (2).

CAUTION

Be careful to avoid damage to cylinder lines when pulling lower leg from upper leg.

2. Lift latch (3) and slide lower leg (4) out of upper leg (5).
3. Take out setscrew (6) and trunnion tube (7).
4. Take out hydraulic cylinder (8).

END OF TASK

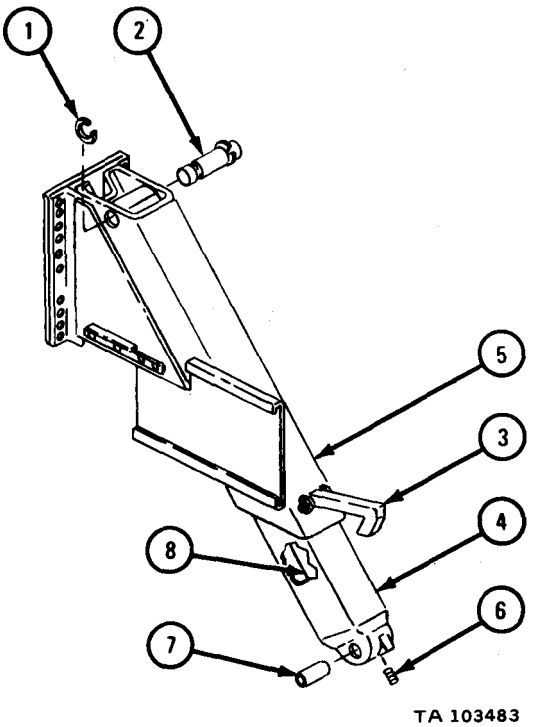

c. Disassembly.

FRAME 1

1. Turn cylinder (1) on side and pull out cylinder rod (2) as far as it will go. Drain oil into container.
2. Using spanner wrench, loosen cylinder head (3). Take out cylinder rod (2).
3. Take off two coupling nuts (4). Take off two tubes (5).

GO TO FRAME 2

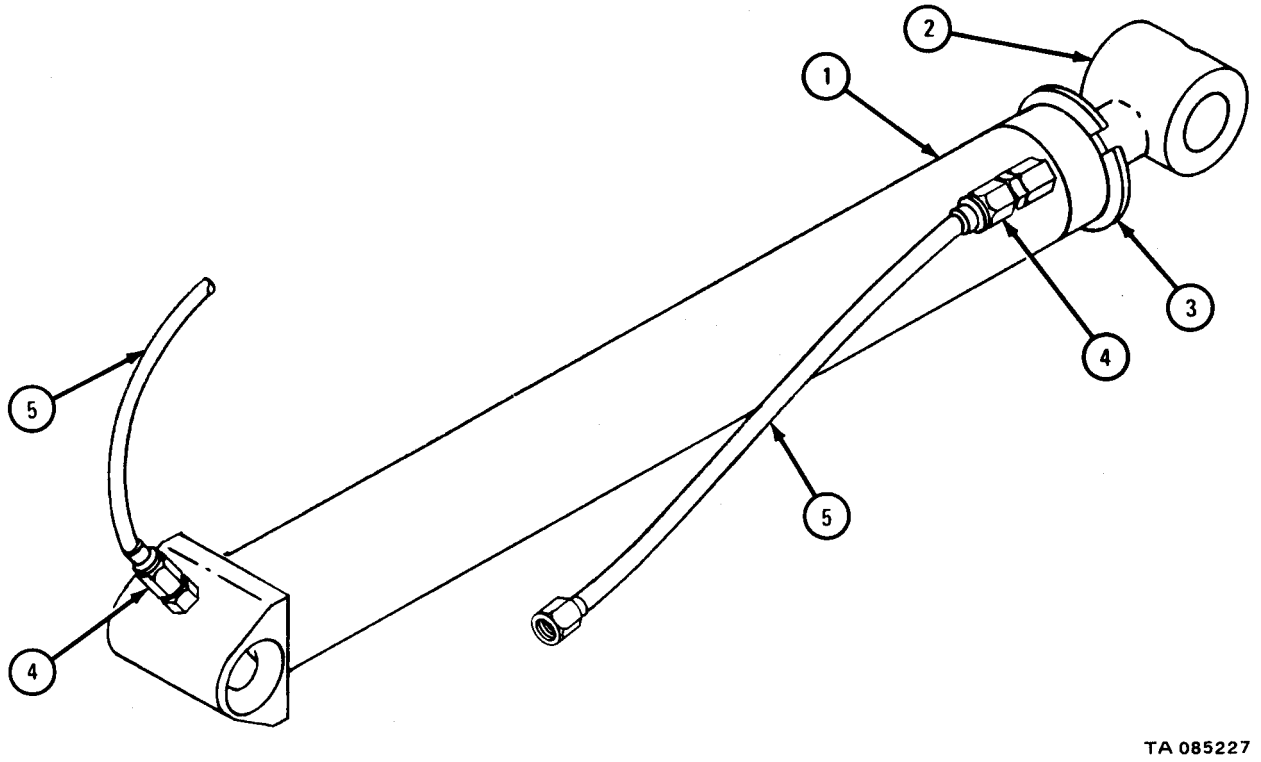

FRAME 2

1. Take out and throw away cotter pin (1).
2. Take off nuts (2), retaining plate (3), cup (4), rod follower (5), and retaining plate (6).
3. Take off cylinder head assembly (7).

GO TO FRAME 3

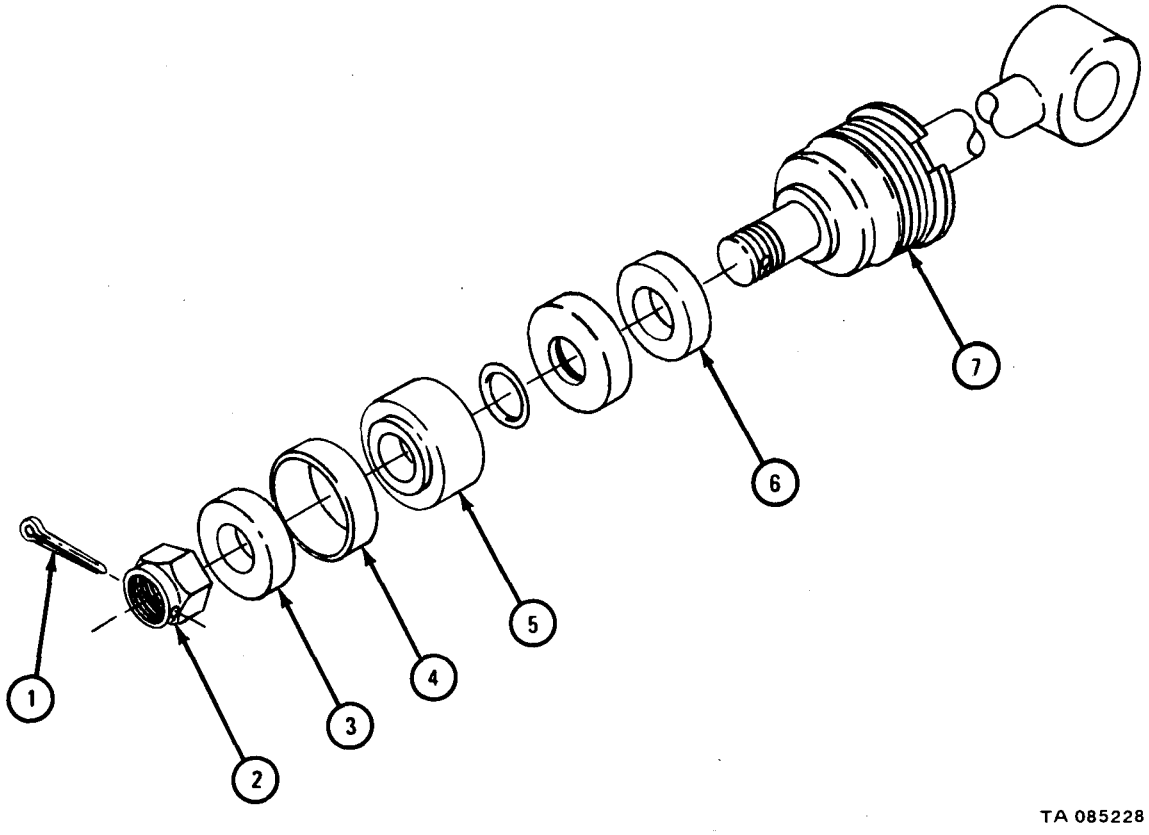

FRAME 3

1. Take off preformed packing (1).
2. Take out three capscrews (2) and lockwashers (3).
3. Take off retainer (4) with rod wiper (5). Take out rod wiper.
4. Take out packing set (6) and packing washer (7).

END OF TASK

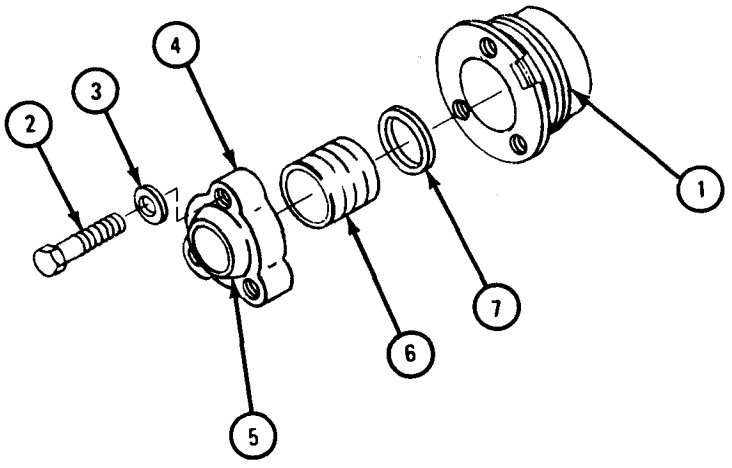

TA 085229

d. Cleaning. There are no special cleaning procedures needed. Refer to cleaning procedures given in Part 1, para 1-3.

e. Inspection and Repair.

FRAME 1

1. Check that cylinder rod (1) is not cracked, chipped or bent.
2. Check that retainer (2) is not chipped or cracked.
3. Check that sleeve bushing (3) is not burred cracked, scored or grooved.
4. Check that cylinder head (4) is not chipped or cracked.
5. Check that two retaining plates (5), two cups (6), and rod follower (7) are not chipped or cracked.
6. Check that cylinder (8) is not chipped cracked or dented.
7. Check that all threaded parts are not stripped or crossthreaded.
8. If parts are damaged, get new ones.

END OF TASK

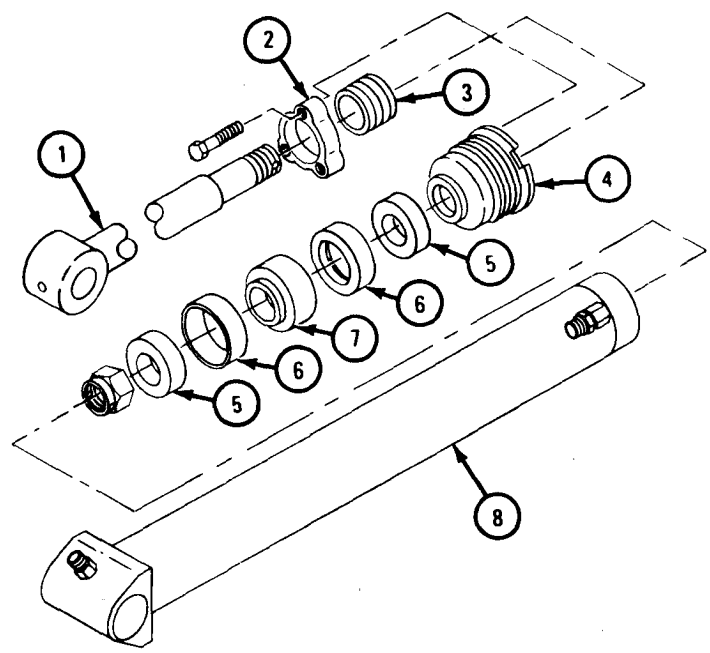

NOTE: CHECK ONLY THOSE PARTS WHICH ARE CALLED OUT. PARTS WITHOUT CALLOUTS ARE SHOWN ONLY FOR REFERENCE PURPOSES.

TA 085377

f. Assembly.

FRAME 1

1. Coat packing set (1) with oil.

NOTE

When putting in packing set (1), make sure that tapered end is facing packing washer (2).

2. Put packing washer (2) on packing set (1) in cylinder head (3).
3. Using wiper replacer, put wiper rod (4) in retainer (5).
4. Put retainer (5) into place and aline screw holes. Put in three capscrews (6) and lockwashers (7).
5. Put on preformed packing (8).

GO TO FRAME 2

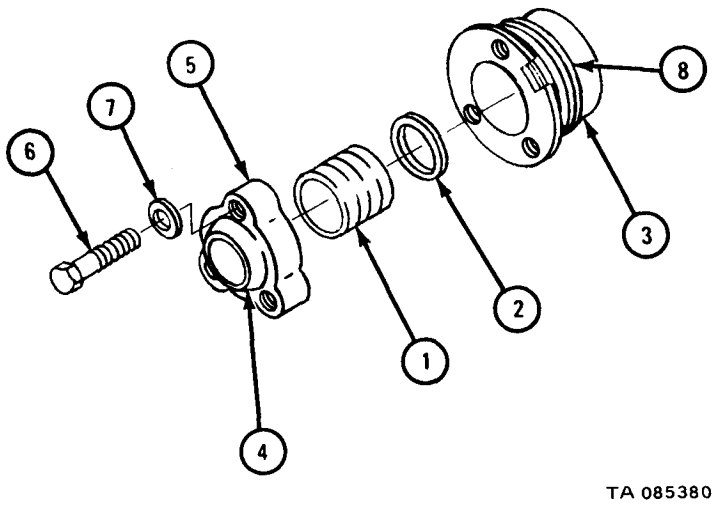

FRAME 2

1. Put cylinder head assembly (1) on cylinder rod (2).
2. Coat two cups (3) with oil.

NOTE

When putting back two cups (3), cup flanges must face in opposite directions.

3. Put preformed packing (4) and two cups (3) on rod follower (5).
4. Put retaining plate (6), rod follower (5) with two cups (3), and retaining plate (7) on cylinder rod (2).
5. Put on nut (8) and aline cotter pin holes.
6. Put in cotter pin (9).

GO TO FRAME 3

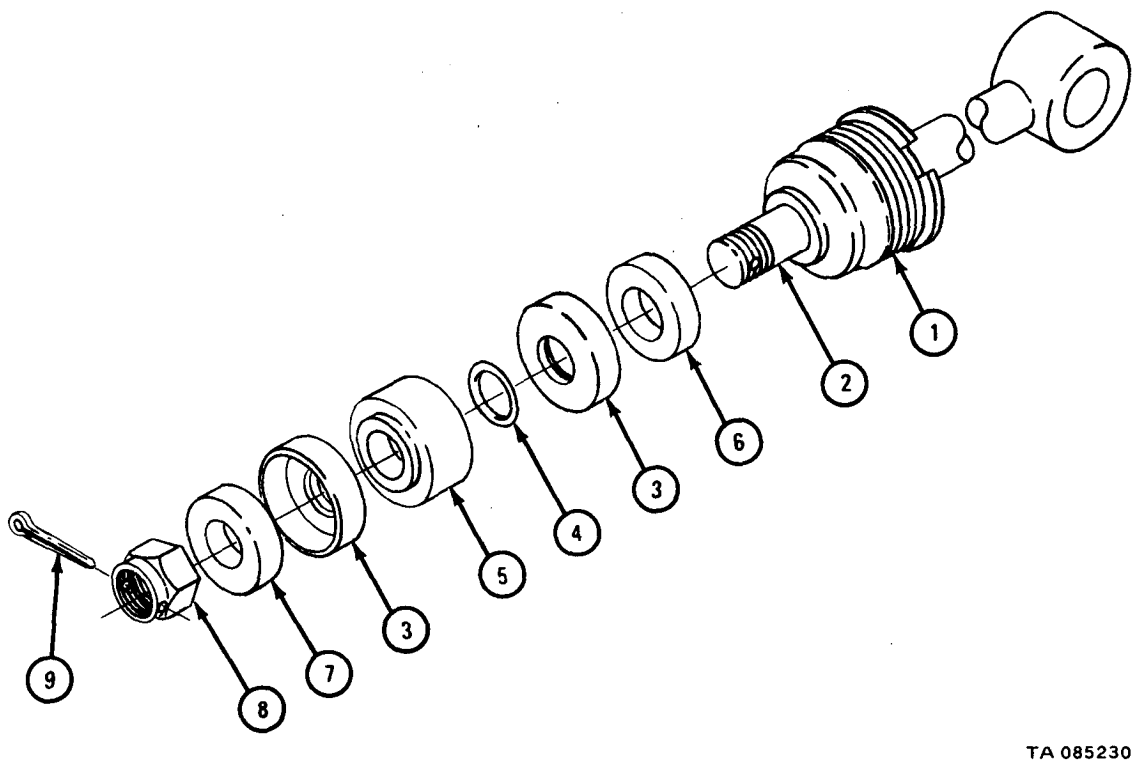

FRAME 3

1. Coat inside of cylinder (1) with oil.
2. Put in cylinder rod assembly (2).
3. Put on cylinder head (3) and tighten with spanner wrench.
4. Put two tubes (4) in place and put on two coupling nuts (5).

END OF TASK

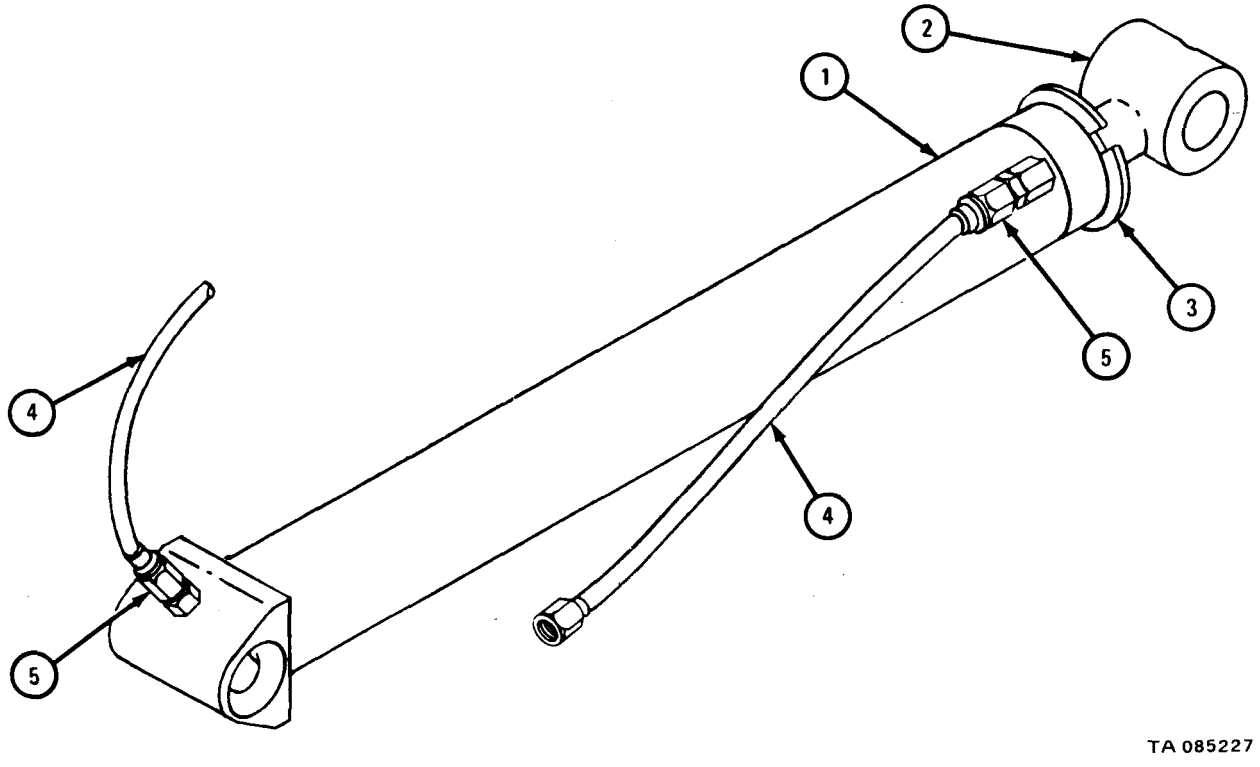

g. Replacement.

FRAME 1

CAUTION

Be careful not to damage cylinder lines when putting hydraulic cylinder assembly (1) into lower outrigger leg (2).

1. Put hydraulic cylinder (1) into lower leg (2).
2. Put trunnion tube (3) through lower leg (2) and hydraulic cylinder (1).
3. Put in setscrew (4).
4. Put lower leg (2) into upper leg (5).
5. Put pin (6) through upper leg (5) and hydraulic cylinder (1).
6. Put snapring (7) on end of pin (6).

NOTE

Follow-on Maintenance Action Required:

Replace outrigger leg assembly. Refer to para 17-54.

END OF TASK

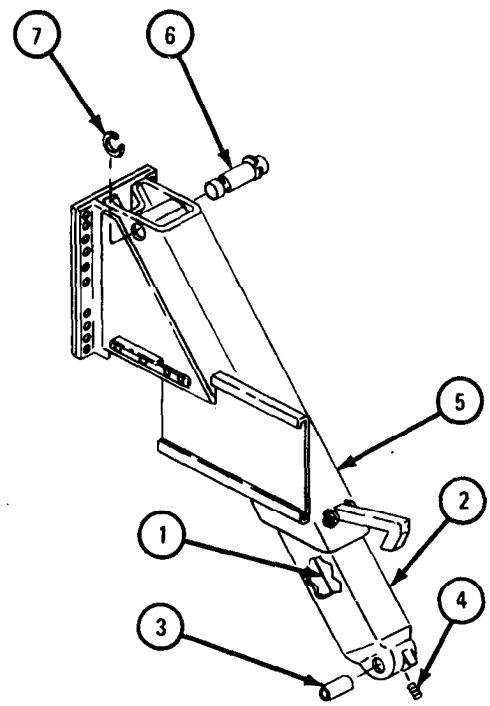

TA 105672

h. Test.

FRAME 1

1. Draw out and pull back outrigger leg (1) two times. Refer to TM 9-2320-209-10.
2. Draw out outrigger leg (1).
3. Note distance between point A and point B.
4. Wait five minutes, then note distance between point A and point B. If distance between point A and point B is less than distance noted in step 3, do the following:
   a. Remove outrigger leg. Refer to para 17-54.
   b. Remove and disassemble outrigger leg hydraulic cylinder. Refer to para 17-55b and 17-55c.
   c. Inspect and repair outrigger leg hydraulic cylinder. Refer to para 17-55e.
   d. Assemble and replace outrigger leg hydraulic cylinder. Refer to para 17-55f and 17-55g.
   e. Replace outrigger leg. Refer to para 17-54.
5. Do steps 1 through 4 again.
6. Pull back outrigger leg. Refer to TM 9-2320-209-10.

END OF TASK

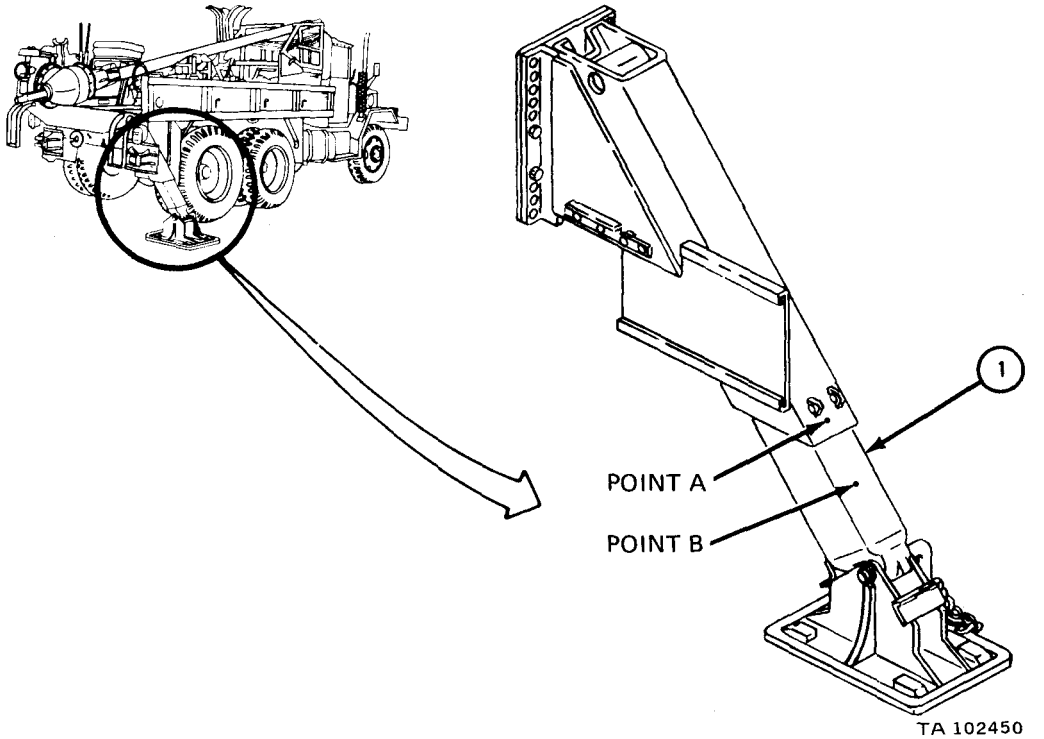

17-56. INTEGRAL DERRICK AND DERRICK SHEAVE ASSEMBLY REMOVAL, REPAIR, AND REPLACEMENT.

TOOLS: No special tools required

SUPPLIES: Artillery and automotive grease, type GAA, MIL-G-10924

PERSONNEL: Two

EQUIPMENT CONDITION: Truck parked on level ground, engine off, handbrake set.

Preliminary Procedure. Chock wheels and lower outrigger arms. Refer to TM 9-2320-209-10.

b. Removal.

FRAME 1

CAUTION

Do not let derrick down lower than horizontal position. If derrick is lowered any further, wormgear (3) will run off worm leveling gear (4) and derrick will fall. When derrick is horizontal, only two teeth on worm leveling gear (4) will mate with worm gear (3).

NOTE

Before placing derrick (1) in horizontal position, be sure there is enough room to take off derrick (1). Make sure there is enough room to feed rack bar (5) halfway out of derrick. You will need at least six feet to the left and 20 feet to the right.

1. Using boring machine, place derrick (1) in position as shown. Refer to Raising, Leveling, and Lowering the Derrick Tube, TM 9-2320-209-10.
2. Using ratchet wrench, turn horizontal leveling worm assembly (2) until derrick is horizontal. Refer to Raising, Leveling, and Lowering the Derrick Tube, TM 9-2320-209-10. Be careful not to let wormgear (3) run off worm wheel leveling gear (4).

GO TO FRAME 2

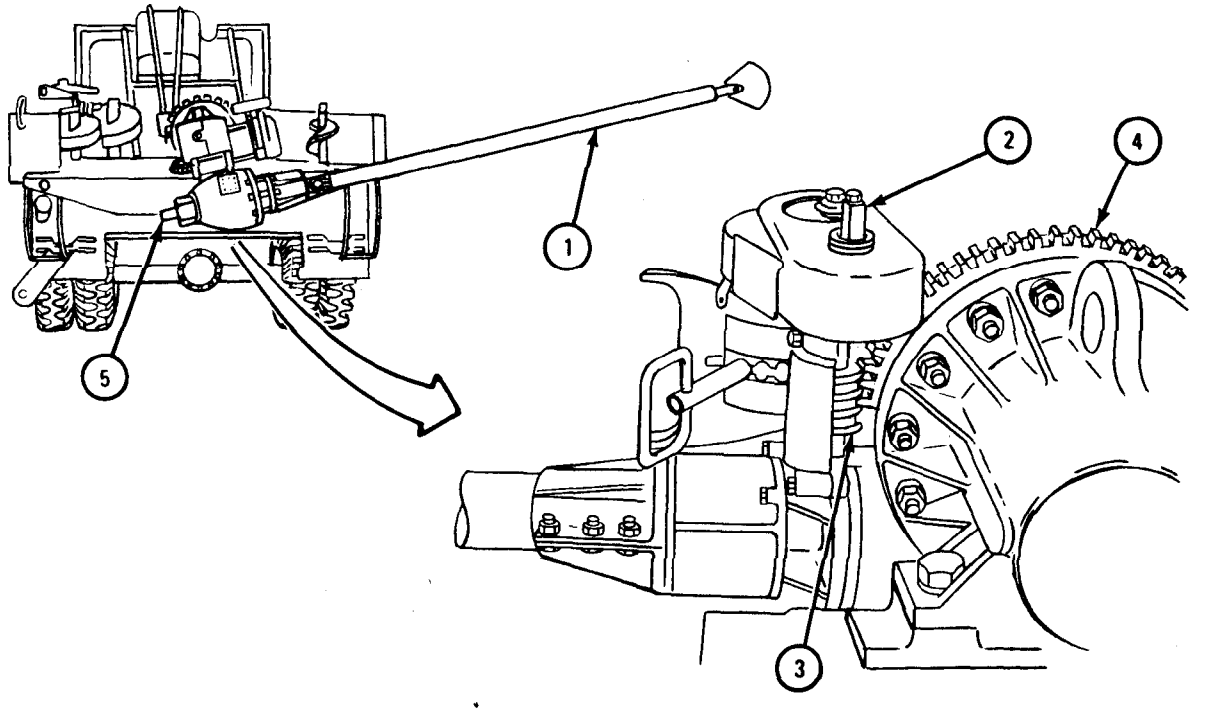

FRAME 2

CAUTION

Do not feed rack bar (1) more than six feet from bottom of boring case (3) while in horizontal position. Weight of rack bar may cause damage to pinions in boring gearcase (3).

1. Feed rack bar (1) halfway out of derrick assembly (2) as shown. Rack bar should stick out five feet. Refer to Raising, Leveling, and Lowering the Derrick Tube, TM 9-2320-209-10.
2. Turn off engine.

GO TO FRAME 3

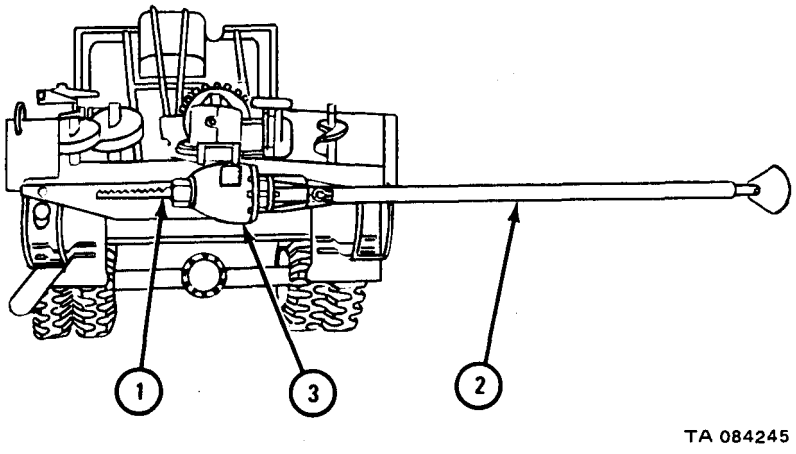

FRAME 3

WARNING

Derrick assembly (1) is heavy. Hold it up firmly when taking it off from over rack bar (2). It can fall and cause damage to equipment and injury to personnel.

Soldiers A and B

1. Loosen but do not take out three screws (3) and nuts (4) which clamp derrick assembly (1) to derrick tube base (5).
2. Take off derrick assembly (1) from over rack bar (2).
3. Loosen but do not take out two screws (6). Pull derrick sheave assembly (7) out of derrick assembly (1).

END OF TASK

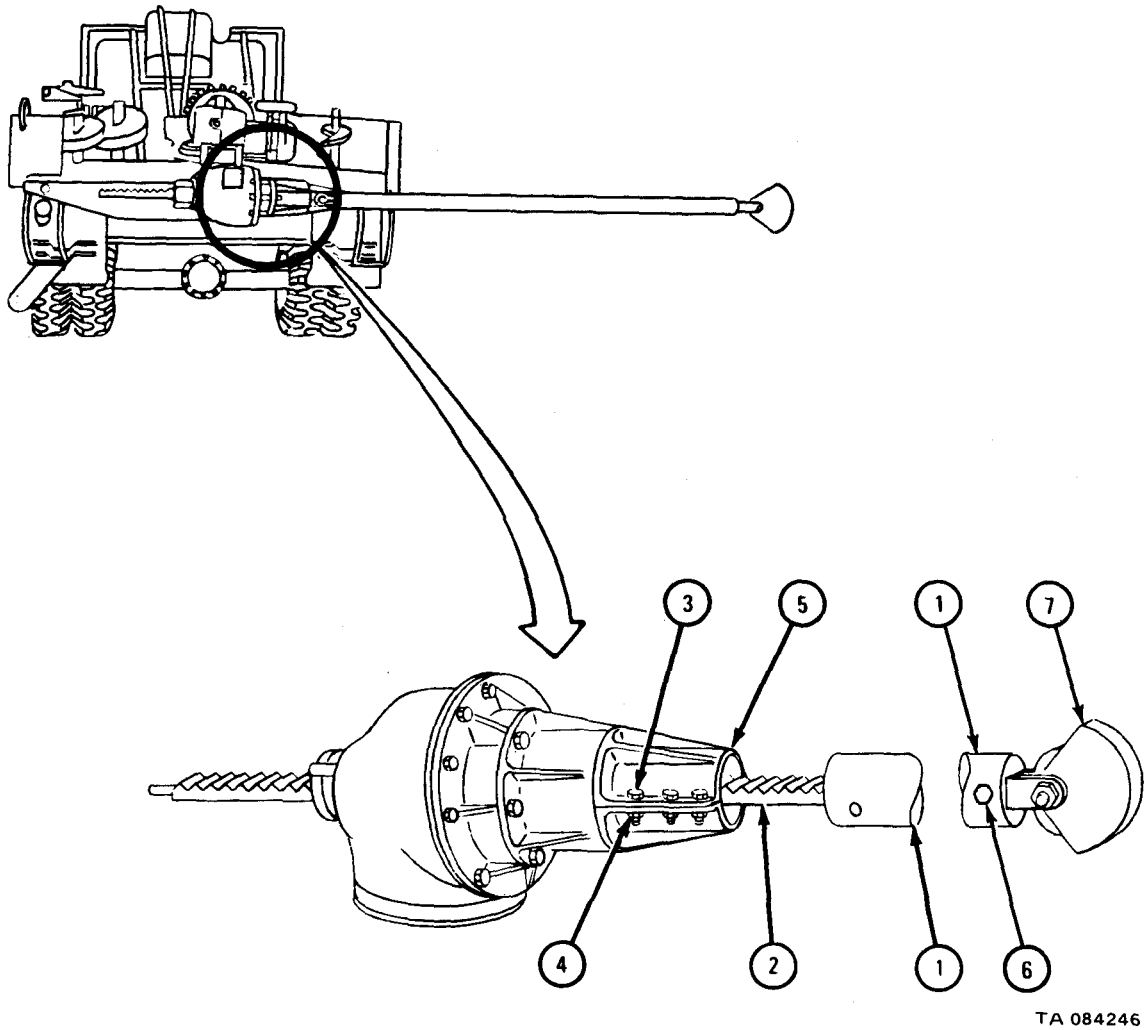

c. Cleaning. There are no special cleaning procedures needed. Refer to cleaning procedures given in Part 1, para 1-3.

d. Inspection and Repair.

FRAME 1

WARNING

Do not heat derrick tube (1) when straightening it. This could make it weak. When setting poles, a weak tube would be dangerous to personnel and equipment.

1. Check that derrick tube (1) has no bends, cracks or flat areas. If tube is bent, straighten it. If it is badly bent of cracked, throw it away and get a new one.

END OF TASK

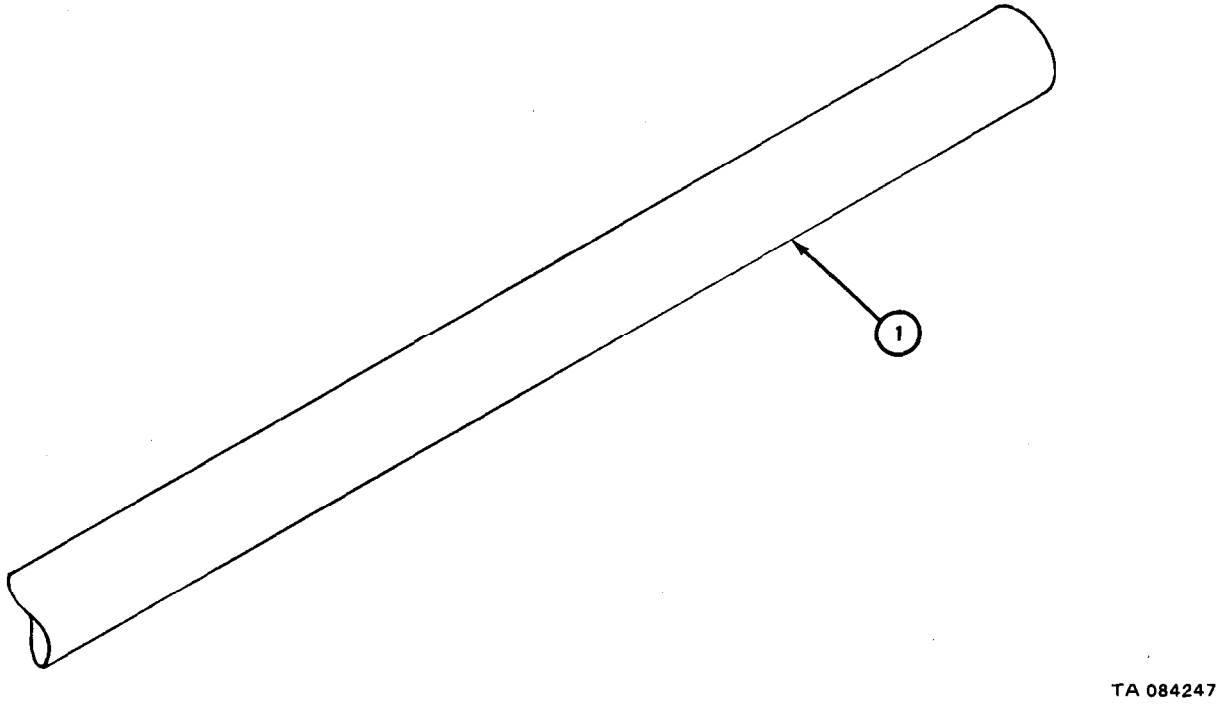

e. Replacement.

FRAME 1

1. Slide derrick sheave assembly (1) into derrick assembly (2).
2. Tighten two screws (3) against groove in shaft of support block (4).
3. Put a coat of grease on derrick assembly (2) in derrick tube base (5).
4. Slide derrick assembly (2) over rack bar (6). Do not push it into derrick tube base (5).
5. Turn derrick assembly (2) so that boring machine operator will be able to see sighting holes (7) when derrick is in vertical position.
6. Push derrick assembly (2) into derrick tube base (5) as far as it will go.

GO TO FRAME 2

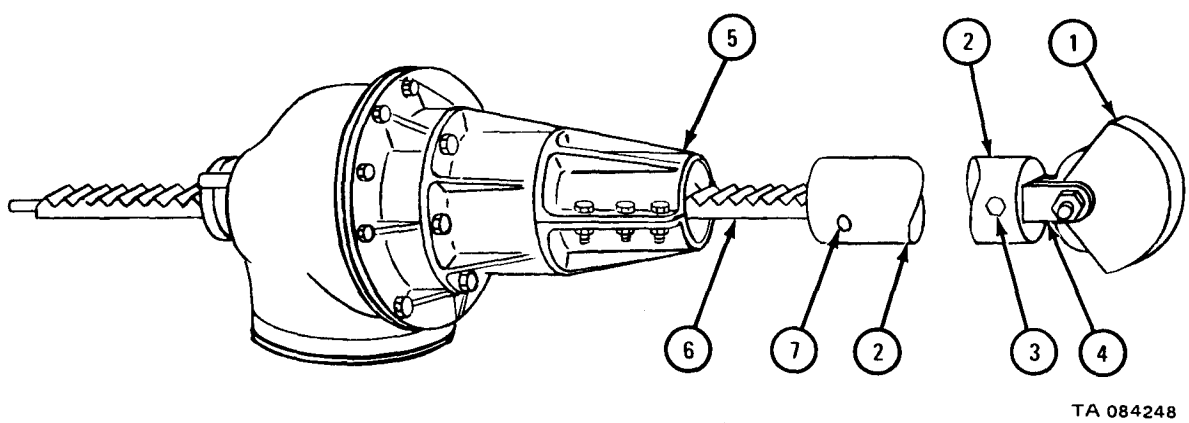

FRAME 2

1. Tighten three capscrews (1) and hex nuts (2) to clamp derrick assembly (3) and derrick tube base (4).
2. Using boring machine, feed rack bar (5) back into derrick assembly (3) . Refer to Raising, Leveling, and Lowering the Derrick Tube, TM 9-2320-209-10.
3. Using boring machine, place derrick assembly into resting position on cradle. Refer to Raising, Leveling, and Lowering the Derrick Tube, TM 9-2320-209-10.

NOTE

Follow-on Maintenance Action Required:

Remove wheel chocks and raise outrigger arms. Refer to TM 9-2320-209-10.

END OF TASK

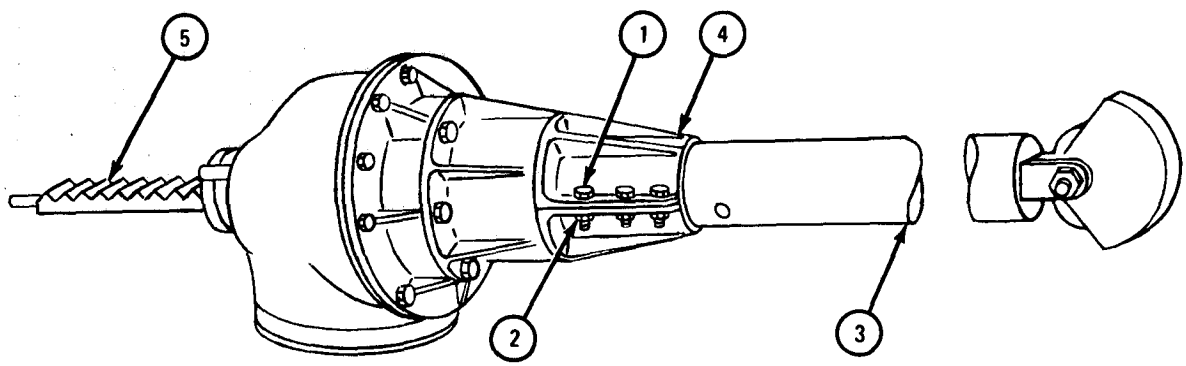

TA 084249

17-57. DERRICK SHEAVE ASSEMBLY REPAIR (TRUCK M764).

TOOLS: No special tools required

SUPPLIES: Graphite grease, VV-G-671
Solvent, dry cleaning, type II (SD-2), Fed. Spec P-D-680

PERSONNEL: One

EQUIPMENT CONDITION: Truck parked, engine off, handbrake set.

a. Preliminary Procedure. Remove derrick sheave assembly. Refer to para 17-56b, frame 3.

b. Disassembly.

FRAME 1

1. Take off nut (1), lockwasher (2), and screw (3) from support block (4).
2. Take out pulley assembly (5).
3. Take out bearing sleeve (6) from inside pulley assembly (5).

NOTE

Do not take out sleeve bearing (7) unless it is worn or damaged. Refer to para 17-57d for inspection procedures.

4. Press out sleeve bearing (7).

GO TO FRAME 2

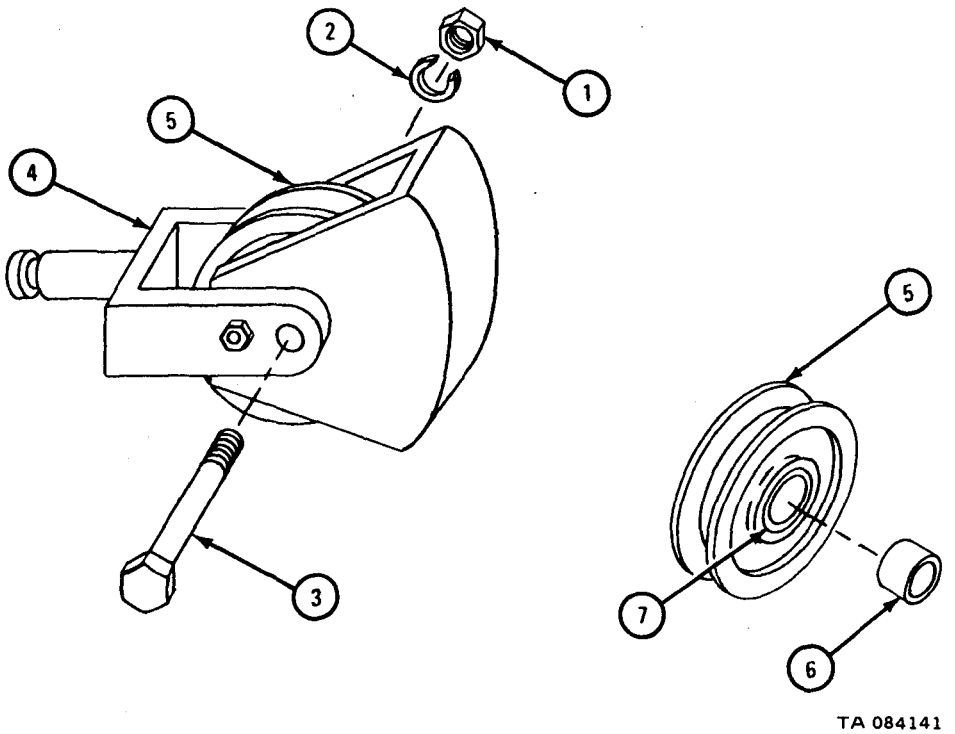

FRAME 2

1. Take off two locknuts (1) and two screws (2). Take sheave cover (3) out of support block (4).

END OF TASK

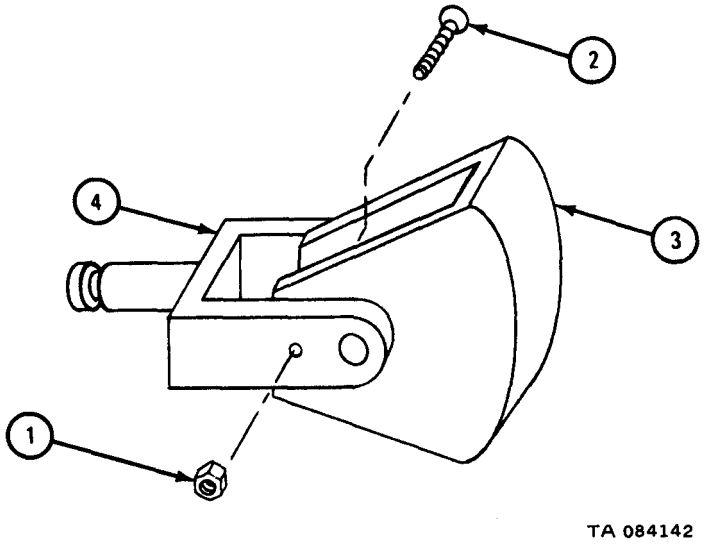

WARNING

Dry cleaning solvent is flammable. Do not use near an open flame. Keep a fire extinguisher nearby when solvent is used. Use only in well-ventilated places. Failure to do this may result in injury to personnel and damage to equipment.

c. Cleaning. Clean all parts with dry cleaning solvent.

d. Inspection and Repair.

FRAME 1

1. Check that pulley assembly (1) and support block (2) have no cracks or other damage. Repair cracked parts by welding. Refer to TM 9-237. If pulley assembly is damaged, get a new one.
2. Check that sleeve bearing (3) inside pulley (4) has no nicks, cracks or burrs. Take off raised metal with a fine mill file. If more repair is needed, get a new bearing.
3. Check that inside diameter of sleeve bearing (3) is not more than 1.520 inches. If inside diameter is more than limit given, get a new sleeve bearing.

GO TO FRAME 2

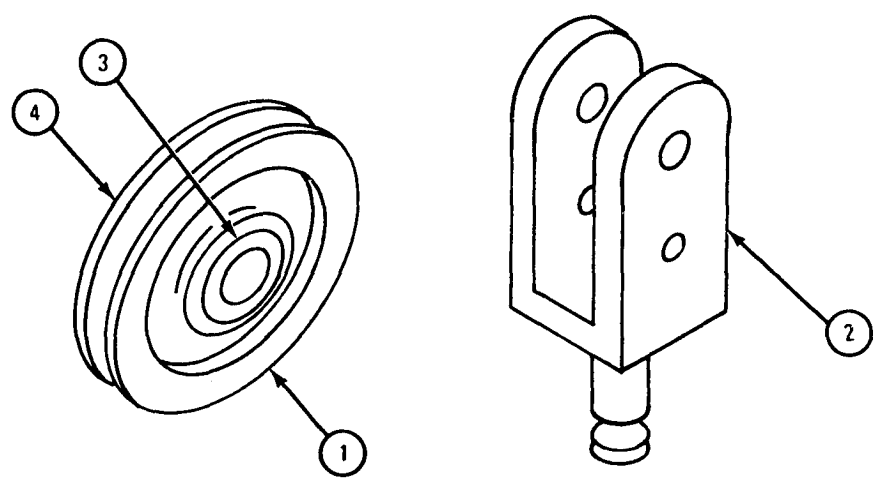

TA 084143

FRAME 2

1. Check that bearing sleeve (1) has no nicks, cracks or burrs. Take off raised metal with fine mill file. If more repair is needed, get a new bearing sleeve.
2. Check that outside diameter of bearing sleeve (1) is not less than 1.475 inches. If outside diameter is less than limit given, get a new one.

GO TO FRAME 3

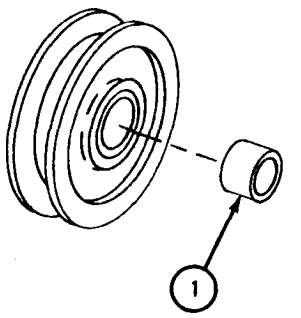

TA 084144

FRAME 3

1. Check that sheave cover (1) is not bent or damaged. If it is bent, straighten it. If more repair is needed, get a new one.

END OF TASK

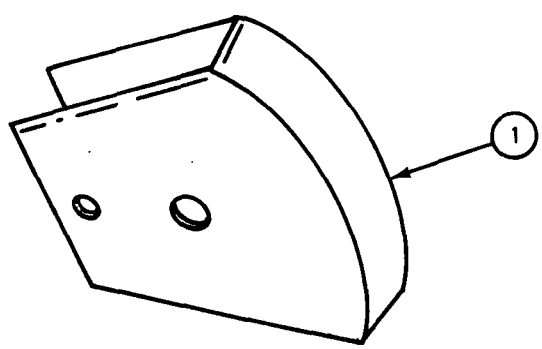

TA 084145

e. Assembly.

FRAME 1

1. Place sheave cover (1) inside support block (2) as shown so that screw holes (3) in cover and block line up.
2. Put in two screws (4) and nuts (5).

GO TO FRAME 2

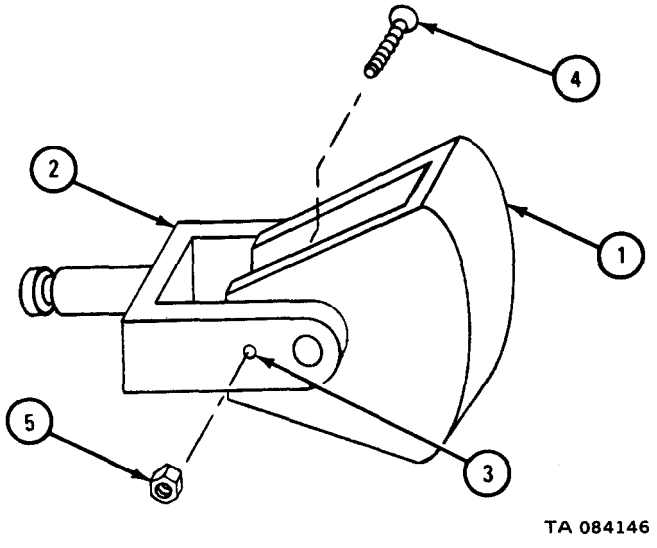

FRAME 2

1. If sleeve bearing (1) was taken out, press it in.
2. Put a coat of graphite grease inside pulley sleeve bearing (1).
3. Put bearing sleeve (2) into sleeve bearing (1).

GO TO FRAME 3

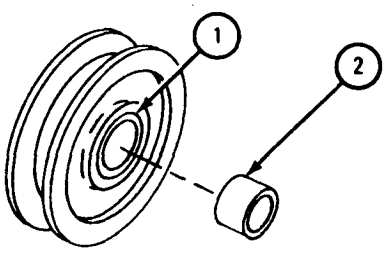

TA 084147

FRAME 3

1. Put pulley assembly (1) into support block (2), alining screw holes (3).
2. Put in cap screw (4), lockwasher (5), and nut (6).

NOTE

Follow-on Maintenance Action Required:

Replace derrick sheave assembly. Refer to para 17-56e, frame 1.

END OF TASK

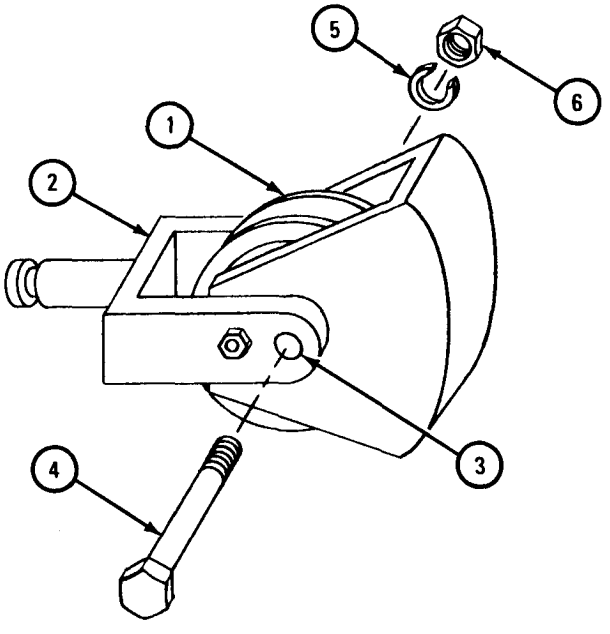

TA 084148

17-58. SNATCH SHEAVE ASSEMBLY REPAIR (TRUCK M764).

TOOLS: No special tools required

SUPPLIES: Safety wire, MS 20995
Graphite grease, VV-G-671
Solvent, dry cleaning, type II (SD-2), Fed. Spec P-D-680

PERSONNEL: One

EQUIPMENT CONDITION: Truck parked, engine off, handbrake set.

a. Preliminary Procedure. Remove snatch sheave assembly. Refer to Snatch Sheave Removal and Replacement, TM 9-2320-209-20.

b. Disassembly.

FRAME 1

1. Take out and throw away safety wire (1) from sheave pulley mounting bolt (2) and sheave housing (3).
2. Take out mounting bolt (2).
3. Take out retaining pin (4).
4. Take out sheave pulley assembly (5).

GO TO FRAME 2

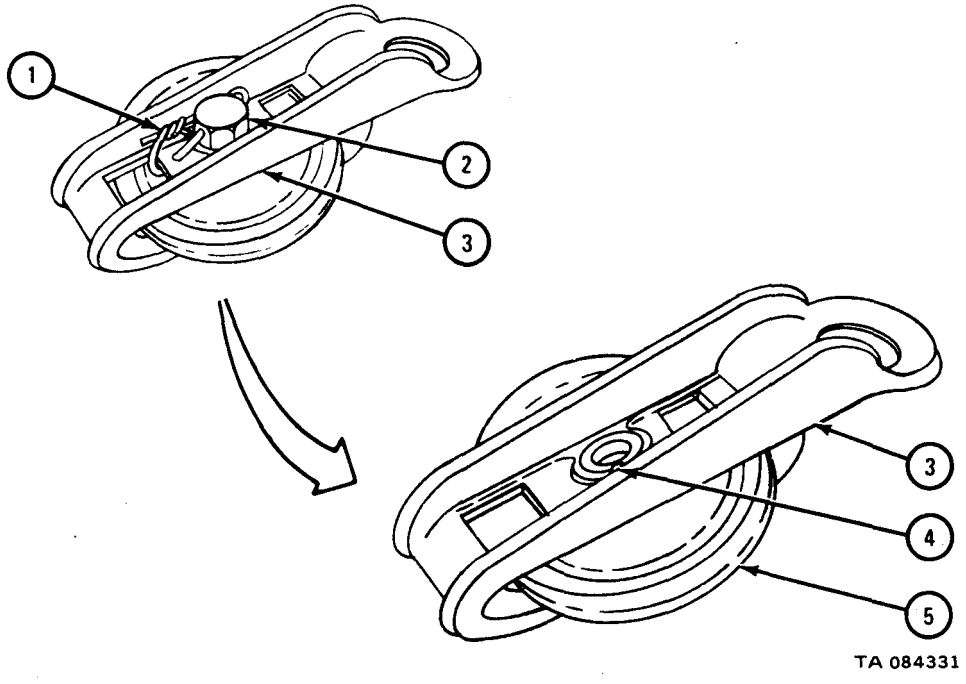

FRAME 2

1. Take out bearing spacer (1) from sheave pulley assembly (2).

END OF TASK

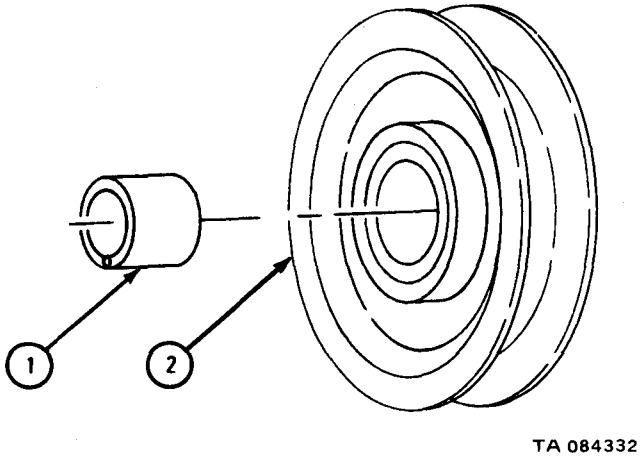

WARNING

Dry cleaning solvent is flammable. Keep a fire extinguisher nearby when solvent is used. Use only in well-ventilated places. Failure to do this may result in injury to personnel and damage to equipment.

c. Cleaning. Clean all parts with solvent.

d. Inspection and Repair.

FRAME 1

1. Check that sheave pulley assembly (1) and sheave housing (2) have no cracks or other damage. Fix cracks by welding. Refer to TM 9-237. If parts need more repair, throw them away and get new ones.
2. Check that sleeve bearing (3) has no nicks, cracks or burrs. Take off raised metal with a fine mill file. If sleeve bearing needs more repair, press it out and press in a new sleeve bearing.
3. Check that inside diameter of sleeve bearing (3) is not more than 1.770 inches. If inside diameter is more than limit given, out bearing and press in a new one.
4. Check that bearing spacer (4) has no nicks, cracks or burrs. Take off raised metal with fine mill file. If more repair is needed, get a new bearing spacer.
5. Check that outside diameter of bearing spacer (4) is not less than 1.735 inches. If outside diameter is less than limit given, get a new bearing spacer.
6. If sleeve bearing (3) or bearing spacer (4) were changed, make sure that bearing spacer fits in bearing. If bearing spacer does not fit, ream or burnish inside of sleeve bearing (3) so bearing spacer fits inside.

END OF TASK

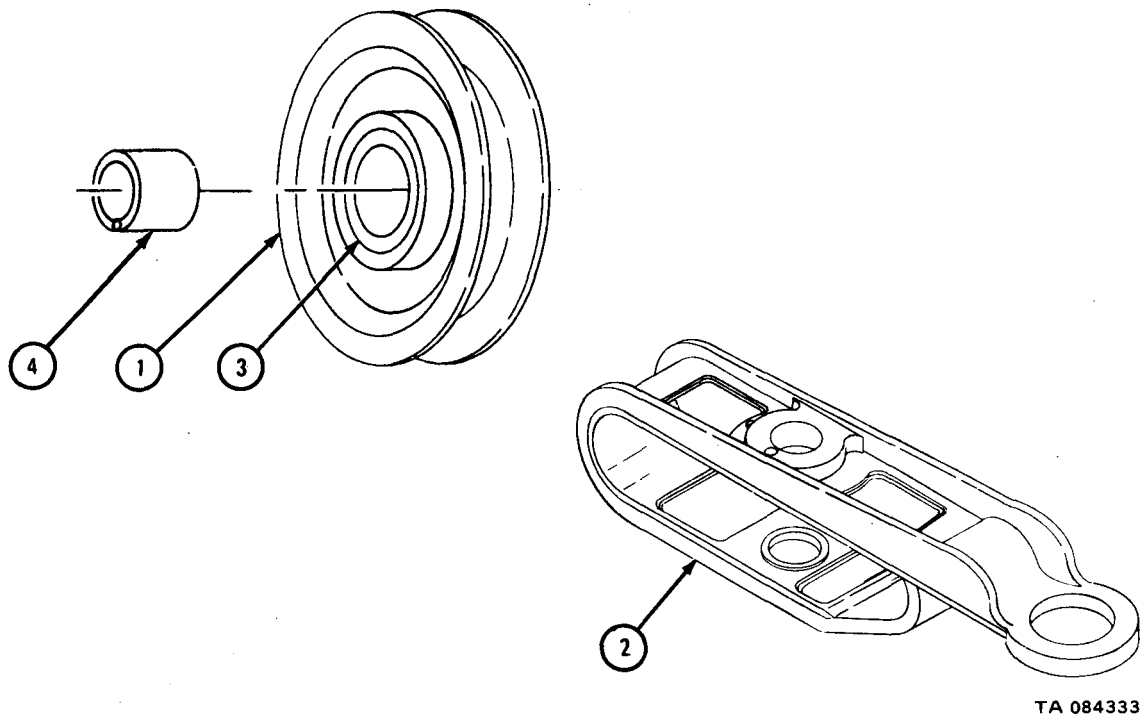

e. Assembly.

FRAME 1

1. Coat inside of sleeve bearing (1) with graphite grease.
2. Put bearing spacer (2) inside sleeve bearing (1).
3. Put sheave pulley assembly (3) in sheave housing (4). Line up hole in bearing spacer (2) with hole in sheave housing. Put retaining pin (5) in hole.

GO TO FRAME 2

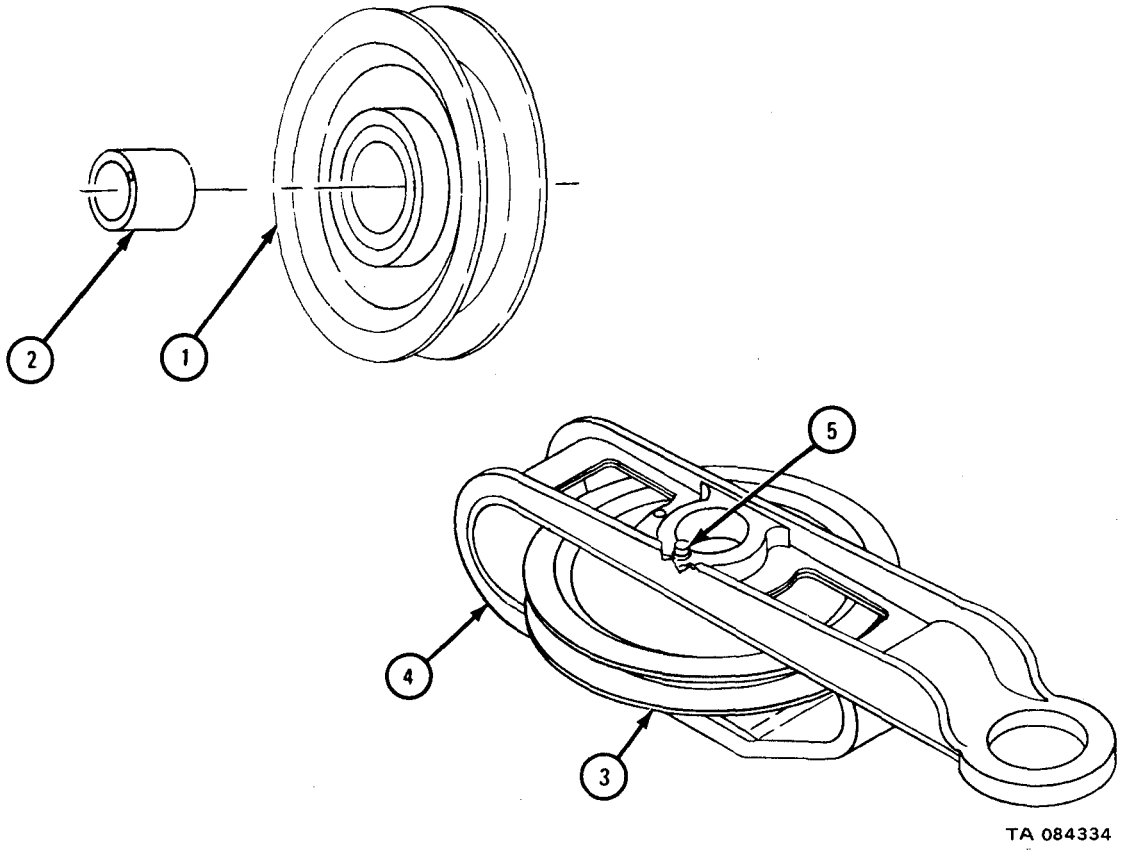

FRAME 2

1. Put in pulley mounting bolt (1) through hole in sheave housing (2). Aline hole for safety wire (3) in mounting bolt with hole in sheave housing.
2. Put in safety wire (3).

NOTE

Follow-on Maintenance Action Required

Replace snatch sheave. Refer to Snatch Sheve Removal and Replacement, TM 9-2320-209-20.

END OF TASK

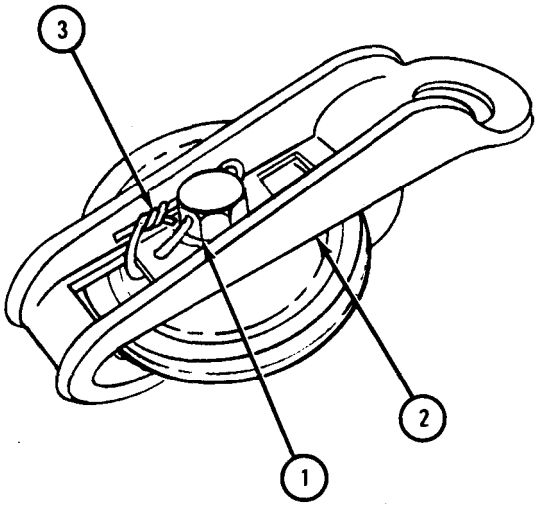

TA 084335

17-59. PIONEER TOOL BRACKET REMOVAL, REPAIR, AND REPLACEMENT.

TOOLS: No special tools required

SUPPLIES: None

PERSONNEL: Two

EQUIPMENT CONDITION: Truck parked, engine off, handbrake set.

a. Preliminary Procedure. Remove tools from pioneer tool bracket.

b. Removal.

FRAME 1

Soldier A 1. Hold pioneer tool bracket (1).

Soldier B 2. Take out six bolts (2) and nuts (3).

Soldier A 3. Take off pioneer tool bracket (1).

END OF TASK

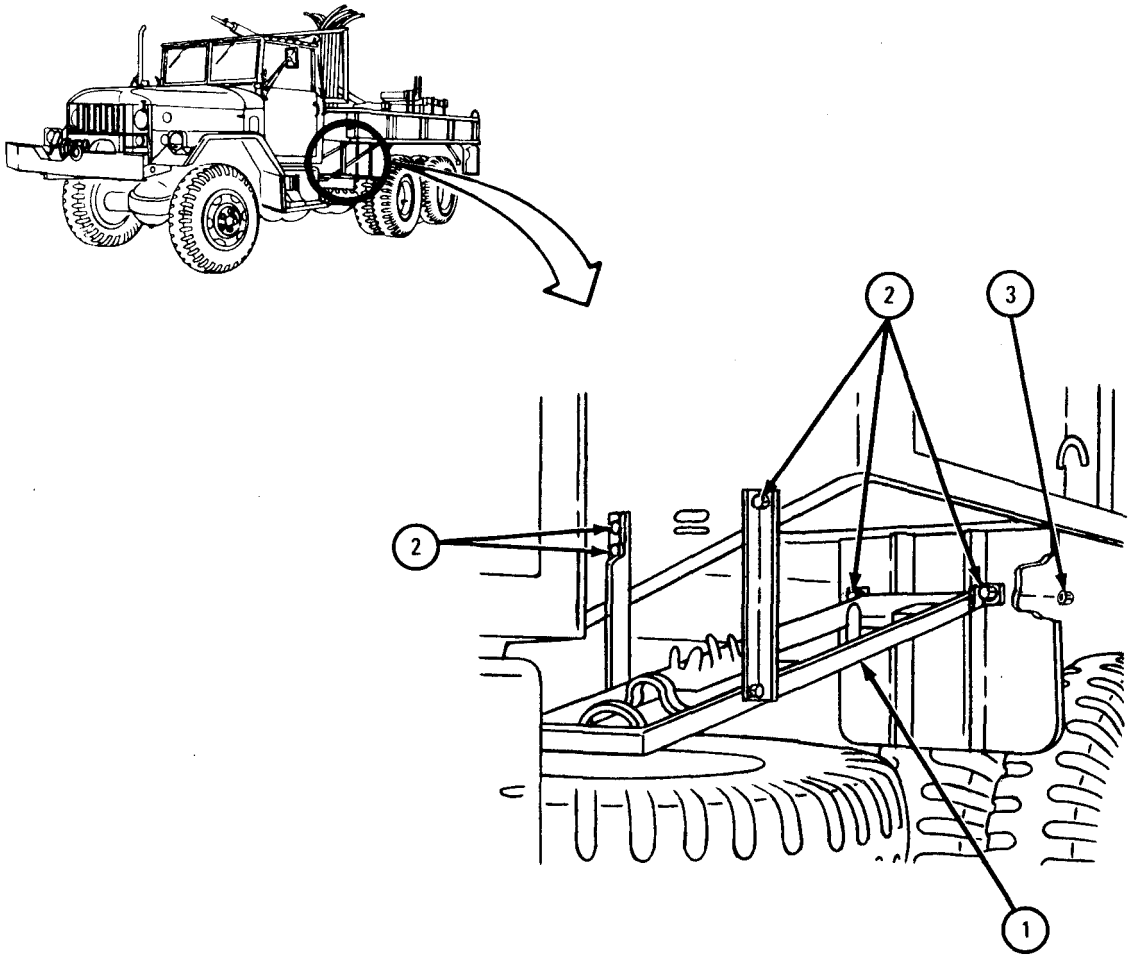

c. Disassembly.

FRAME 1

1. Take out four bolts (1) and nuts (2). Take off four brackets (3).

END OF TASK

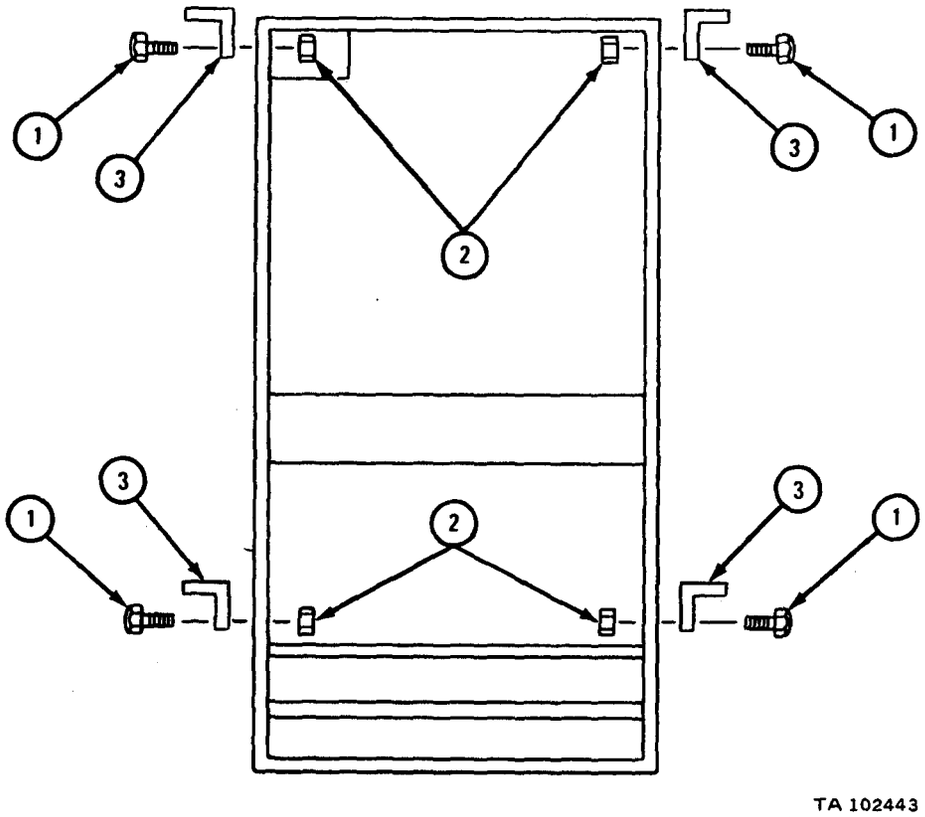

d. Cleaning. There are no special cleaning procedures needed. Refer to cleaning procedures given in Part 1, para 1-3.

e. Inspection and Repair. Check that pioneer tool bracket has no bends, dents, cracks or welding defects. Repair by welding or straightening. Refer to TM 9-237 and FM 43-2.

f. Assembly.

FRAME 1

1. Put four brackets (1) in place and aline screw holes.
2. Put in four bolts (2) and put on four nuts (3).

END OF TASK

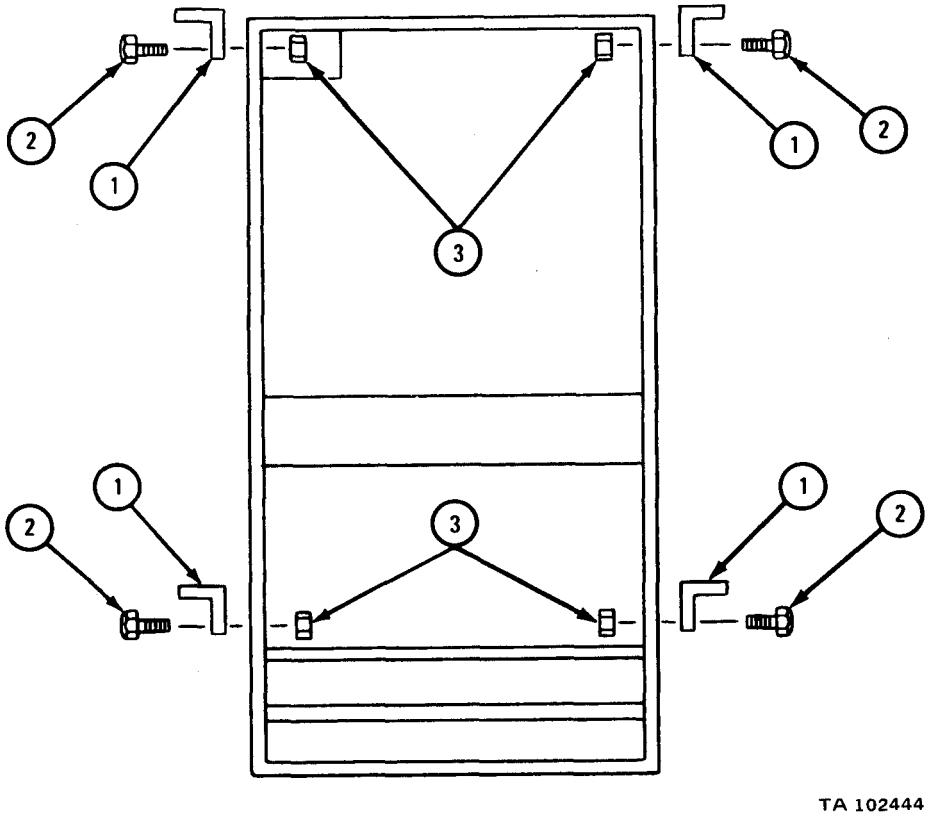

g. Replacement.

FRAME 1

Soldier A 1. Hold pioneer tool bracket (1) in place and aline screw holes.
Soldier B 2. Put in five bolts (2) and put on five nuts (3).

NOTE

Follow-on Maintenance Action Required:
Replace tools in pioneer tool bracket.

END OF TASK

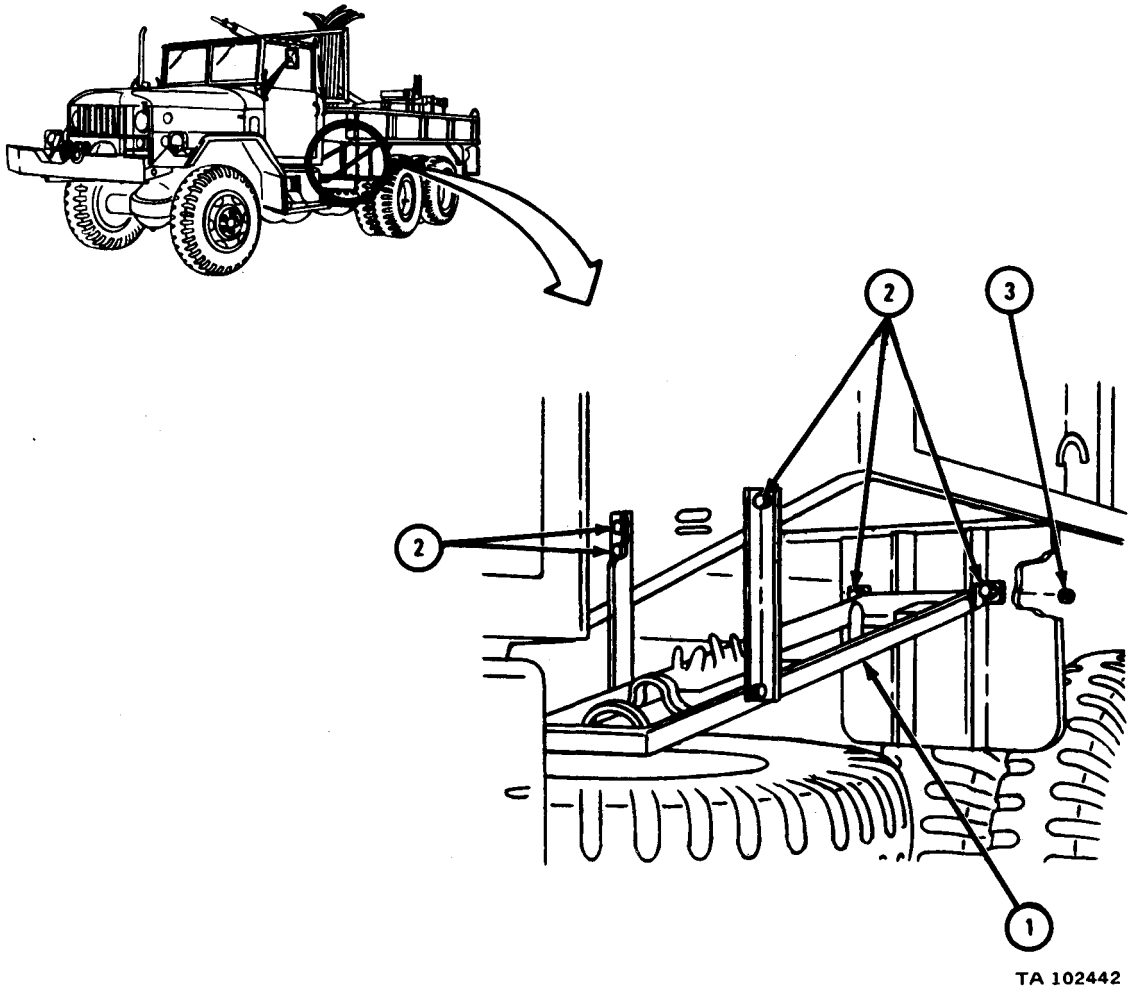

17-60. CARGO BODY REMOVAL, REPAIR, AND REPLACEMENT (TRUCK M764).

TOOLS: No special tools required

SUPPLIES: Solvent, dry cleaning, type II (SD-2), Fed. Spec P-D-680
Clean rags

PERSONNEL: Two

EQUIPMENT CONDITION: Truck parked, engine off, handbrake set.

a. Preliminary Procedures.

(1) Remove cab protector. Refer to TM 9-2320-209-20.

(2) Remove power divider. Refer to Part 3, para 18-12.

(3) Remove earth boring machine. Refer to para 17-45.

(4) Remove splash shields. Refer to para 17-69.

(5) Remove earth auger bits. Refer to Operation of Earth Boring Machine and Polesetter Trucks, TM 9-2320-209-10.

(6) Remove outrigger hydraulic lines. Refer to TM 9-2320-209-20.

(7) Remove taillight assembies. Refer to Taillight and Stoplight Assembly Removal and Replacement, TM 9-2320-209-20.

(8) Remove taillight wiring harness. Refer to TM 9-2320-209-20.

(9) Remove pioneer tool bracket. Refer to para 17-59.

b. Removal.

FRAME 1

1. Take out two screws and washers (1), springs (2), and nuts (3).
2. Take out two screws (4), washers (5), and nuts (6).
3. Do steps 1 and 2 again on other side of body (7).

GO TO FRAME 2

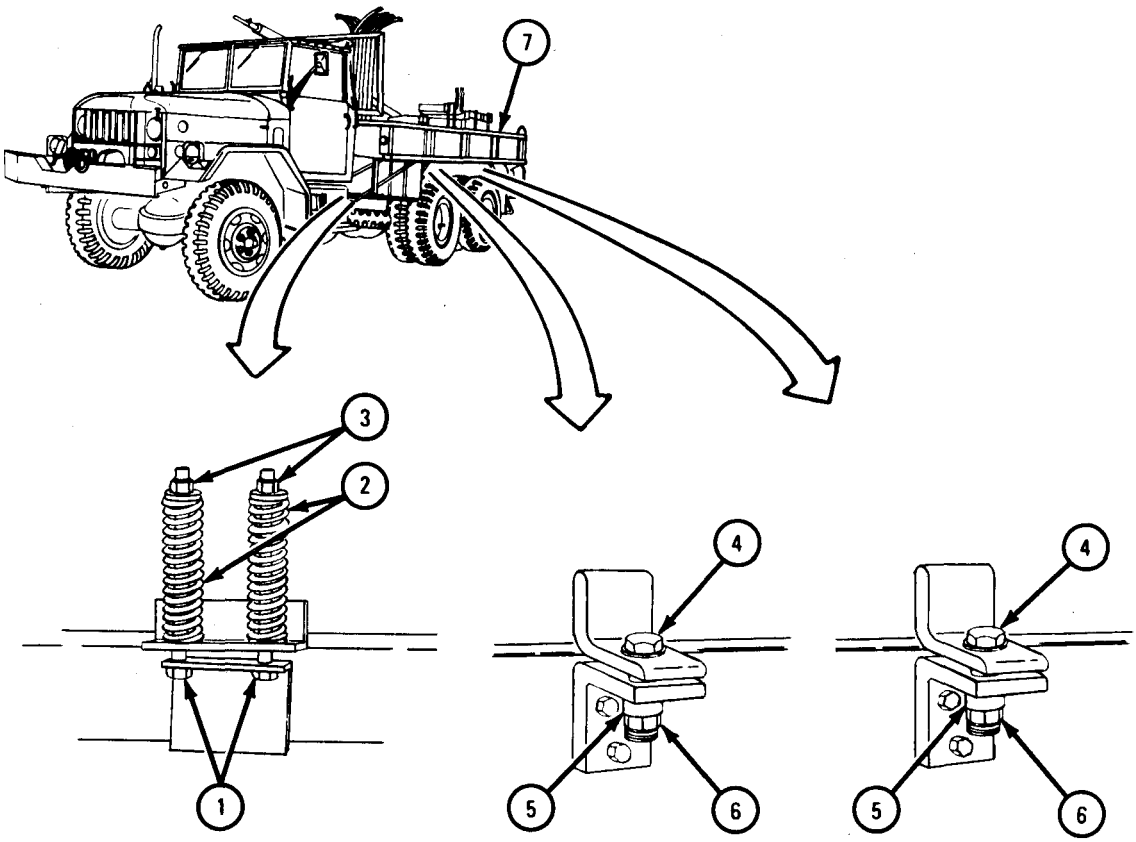

TA 104942

FRAME 2

1. Put two chains (1) around body (2) and join them to hoist equipment as shown.

Soldier A 2. Guide body (2) off truck and onto wood blocks as soldier B lifts body.

Soldier B 3. Using hoisting equipment, lift body (2) off truck and onto wood blocks.

4. Unhook two chains (1) from body.

END OF TASK

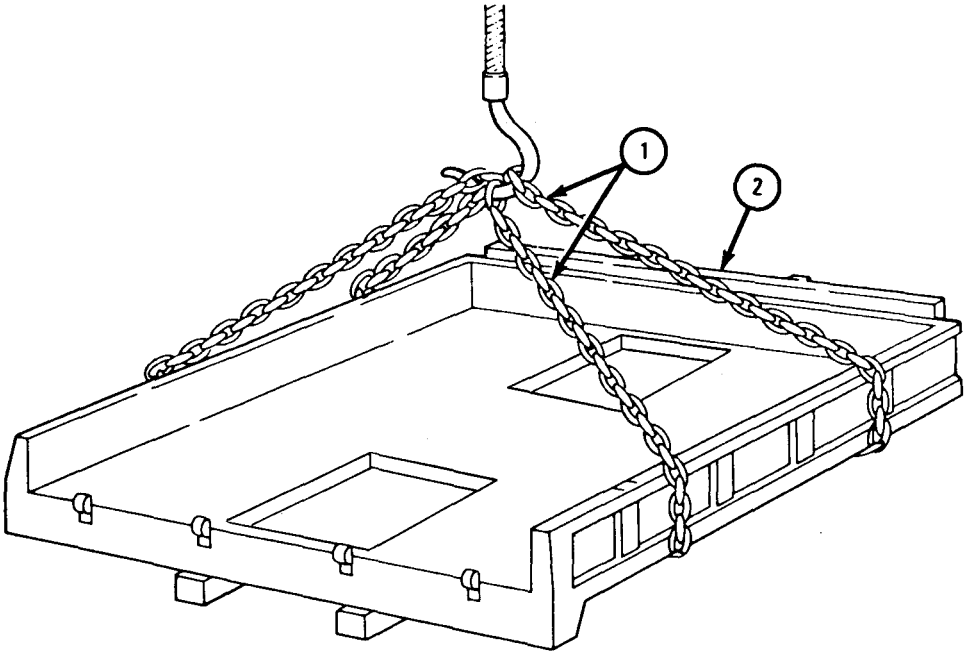

TA 104943

c. Cleaning. There are no special cleaning procedures needed. Refer to cleaning procedures given in Part 1, para 1-3.

d. Inspection and Repair.

FRAME 1

1. Check that body (1) is not bent, dented or cracked and that it has no broken welds. Straighten bent or dented parts. Refer to FM 43-2. Weld tears or cracks. Refer to TM 9-237.
2. Check that nuts (2) and bolts (3) are not cracked or damaged and that they do not have any stripped threads. If parts are damaged, get new ones.
3. Check that two springs (4) and bracket (5) are not cracked, bent or damaged. Straighten bent or dented parts. Refer to FM 43-2. Weld tears or cracks. Refer to TM 9-237.
4. If more repair is needed, get new parts.

END OF TASK

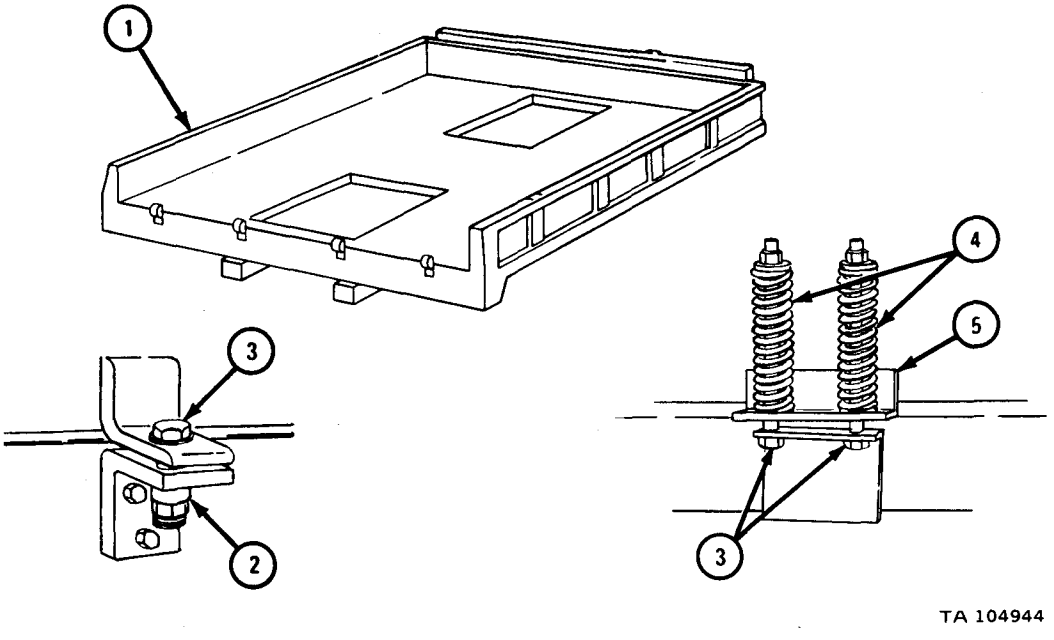

e. Replacement.

FRAME 1

1. Put two chains (1) around body (2) and join chains to hoisting equipment as shown.

Soldier A 2. Guide body (2) into place on truck as soldier B lifts body.

Soldier B 3. Using hoisting equipment, lift body (2) onto truck alining holes.

4. Unhook two chains (1) from body (2).

GO TO FRAME 2

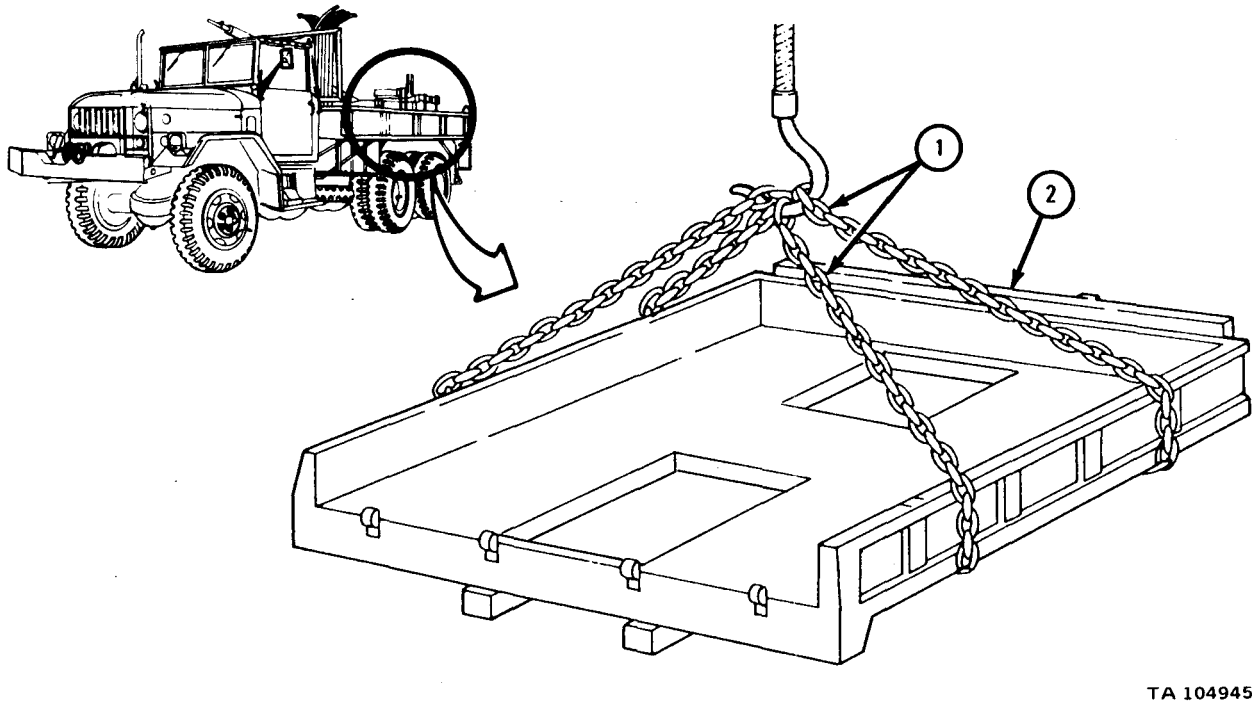

FRAME 2

1. Put in two springs (1) and screws and washers (2) and put on nuts (3).
2. Put in two screws (4) and put on two washers (5) and nuts (6).
3. Do steps 1 and 2 again on other side of body (7).

GO TO FRAME 3

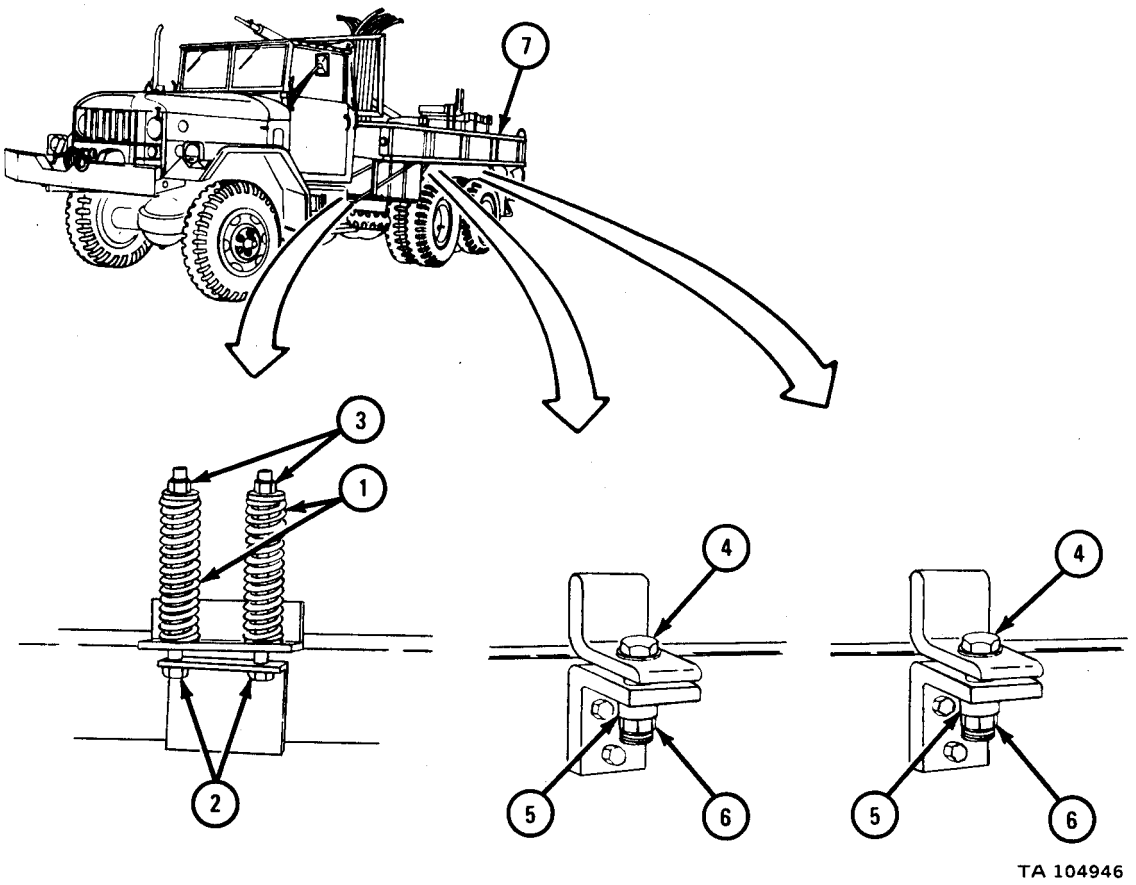

FRAME 3

NOTE

Follow-on Maintenance Action Required:

1. Replace taillight wiring harnesses. Refer to TM 9-2320-209-20.
2. Replace taillight assemblies. Refer to TM 9-2320-209-20.
3. Replace outrigger hydraulic lines. Refer to TM 9-2320-209-20.
4. Replace earth auger bits. Refer to TM 9-2320-209-10.
5. Replace splash shields. Refer to para 17-69.
6. Replace earth boring machine. Refer to para 17-45.
7. Replace power divider. Refer to para 18-12.
8. Replace cab protector. Refer to TM 9-2320-209-20.
9. Replace pioneer tool bracket. Refer to para 17-59.

END OF TASK

17-61. CAB PROTECTOR REMOVAL, REPAIR, AND REPLACEMENT (TRUCK M756A2).

TOOLS: No special tools required

SUPPLIES: None

PERSONNEL: Two

EQUIPMENT CONDITION: Truck parked, engine off, handbrake set.

a. Preliminary Procedure. Take floodlight wiring harness off chassis wiring harness. Refer to para 7-10.

b. Removal.

FRAME 1

1. Tag two electrical leads (1) so they can be put back in the same place.
2. Unplug two electrical leads (1) from connectors (2).
3. Take handle assembly (3) out of cab protector (4).
4. Slide floodlight support assembly (5) up and out of cab protector (4).
5. Do steps 1 through 4 again on other side of cab protector (4).

GO TO FRAME 2

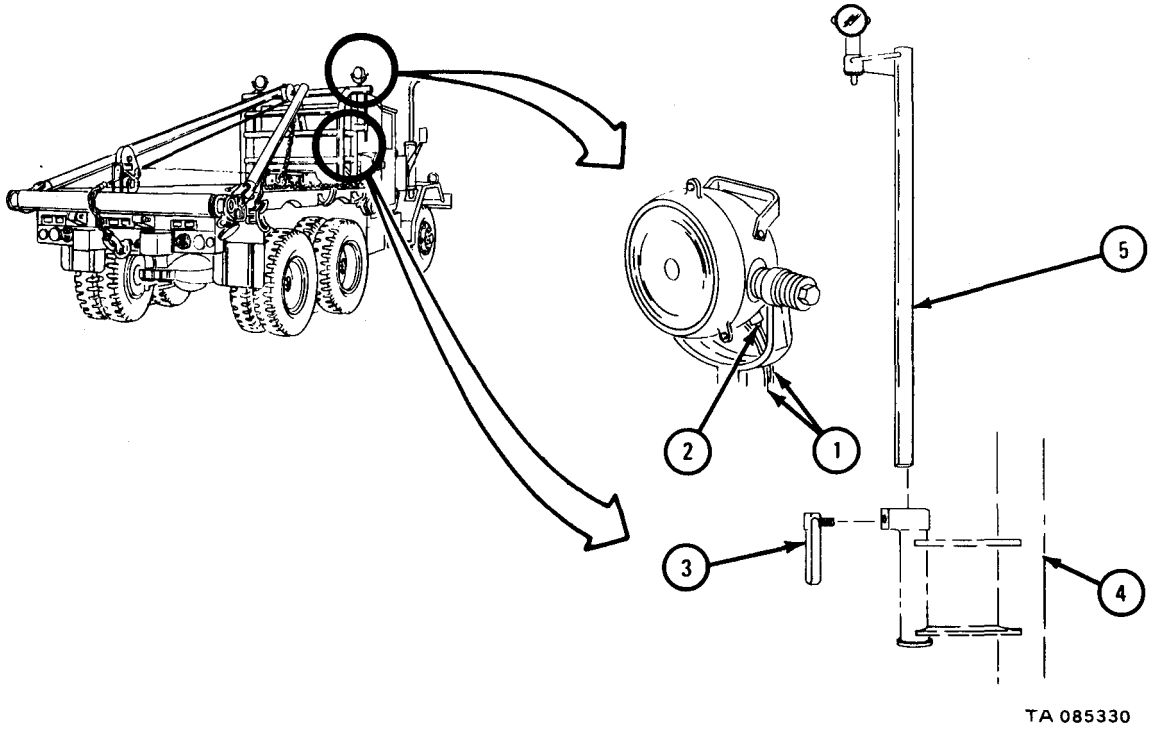

FRAME 2

1. Take off eight nuts (1) and take out eight screws and washers (2).

Soldier A 2. Working under truck, take off eight nuts (3) and washers (4).

Soldier B 3. Take out eight screws (5).

Soldier A 4. Using hoist, lift cab protector (6) off truck as soldier B guides it.

Soldier B 5. Guide cab protector (6) off truck as soldier A lifts it.

END OF TASK

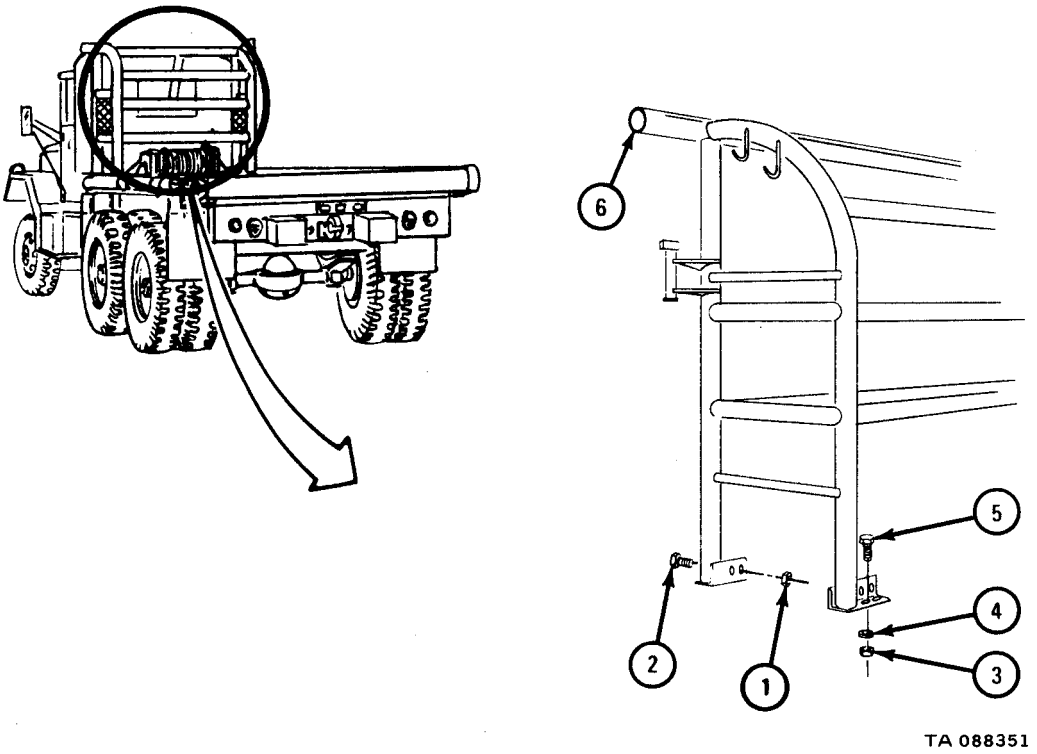

c. Cleaning. There are no special cleaning procedures required. Refer to cleaning procedures given in Part 1, para 1-3.

d. Inspection and Repair.

FRAME 1

1. Check that cab protector (1) is not bent, dented, or cracked and that is has no broken welds. If cab protector is damaged, get a new one.

END OF TASK

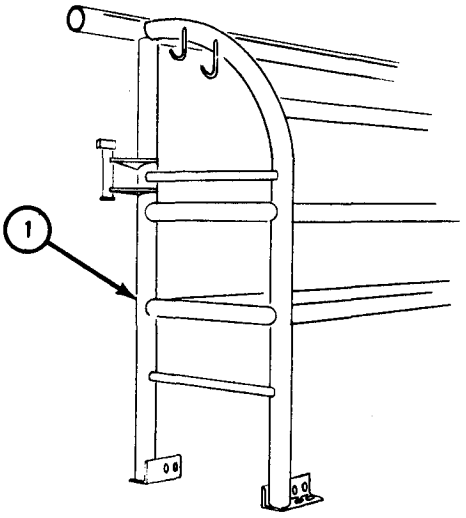

TA 088352

e. Replacement.

FRAME 1

Soldier A 1. Using hoist, lift cab protector onto truck as soldier B guides it.
Soldier B 2. Guide cab protector (1) as soldier A lifts it onto truck.
Soldier A 3. Put in eight screws (2).
Soldier B 4. Working under truck, put on eight washers (3) and nuts (4).
Soldier A 5. Put in eight screws and washers (5) and put on eight nuts (6).
GO TO FRAME 2

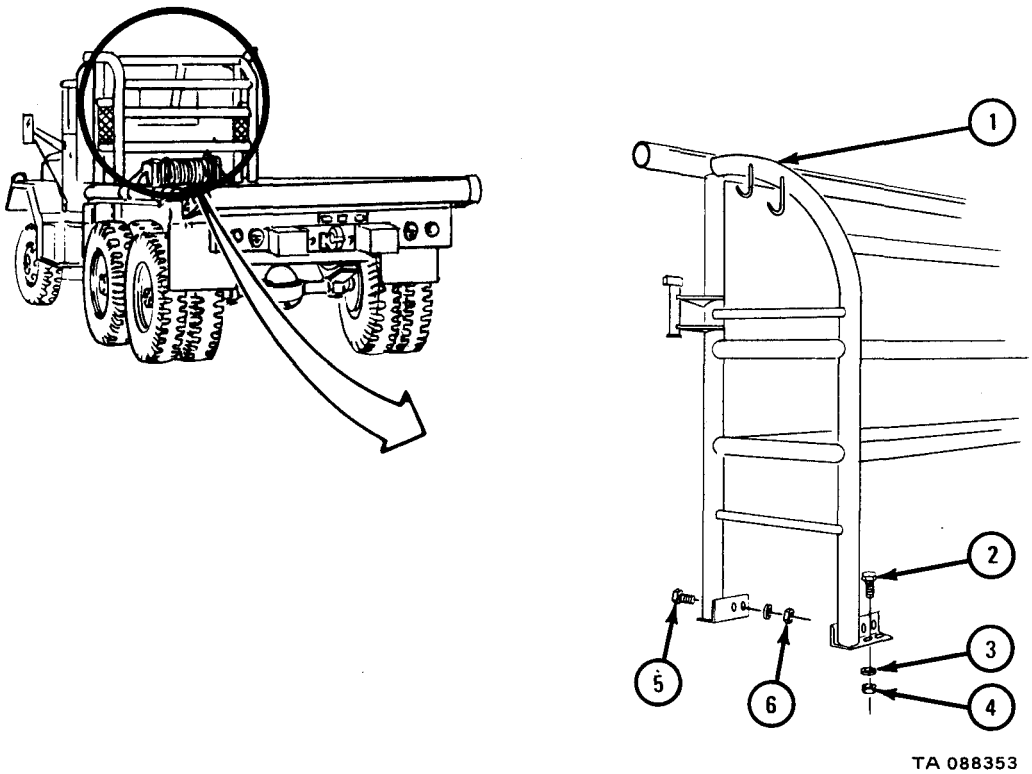

FRAME 2

1. Slide floodlight support assembly (1) into cab protector (2).
2. Put in handle assembly (3).
3. Plug two electrical leads (4) into two connectors (5) as tagged. Take off tags.
4. Do steps 1 through 3 again on other side of cab protector (2).

NOTE

Follow-on Maintenance Action Required:

Connect floodlight wiring harness to chassis wiring harness. Refer to para 7-10.

END OF TASK

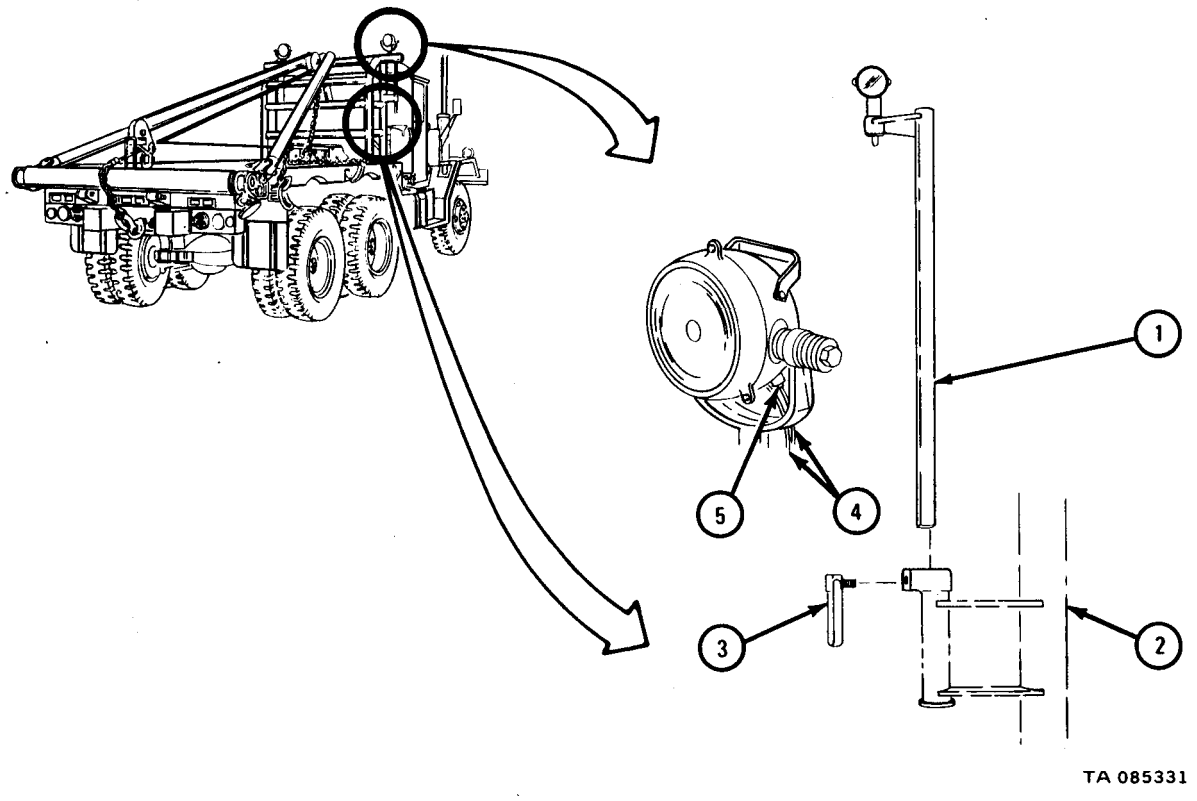

17-62. FLOOR BOARDS REMOVAL, REPAIR, AND REPLACEMENT (TRUCK M756A2).

TOOLS: No special tools required

SUPPLIES: Soapy water
Clean rags

PERSONNEL : Two

EQUIPMENT CONDITION: Truck parked, engine off, handbrake set,

a. Preliminary Procedures.

(1) Remove body tarpaulin. Refer to Bow and Tarp Kits Installation and Removal, TM 9-2320-209-10.

(2) Remove front and rear end curtains. Refer to Bow and Tarp Kits Installation and Removal, TM 9-2320-209-10.

(3) Remove tailgate and troop seat rack assemblies. Refer to TM 9-2320-209-10.

(4) Remove A-frame assembly. Refer to TM 9-2320-209-10.

b. Removal.

FRAME 1

NOTE

Nuts (1) and washers (2) may have been replaced with locknuts.

Soldier A 1. Working under truck, take 84 nuts (1) and washers (2) off carriage bolts (3).

Soldier B 2. Take out 84 carriage bolts (3).

Soldiers A and B 3. Take off 12 hold down slats (4) and two parts of hold down slat (5).

NOTE

Note order of floorboards (6) so they go back in the same place.

4. Take off 13 floorboards (6).

END OF TASK

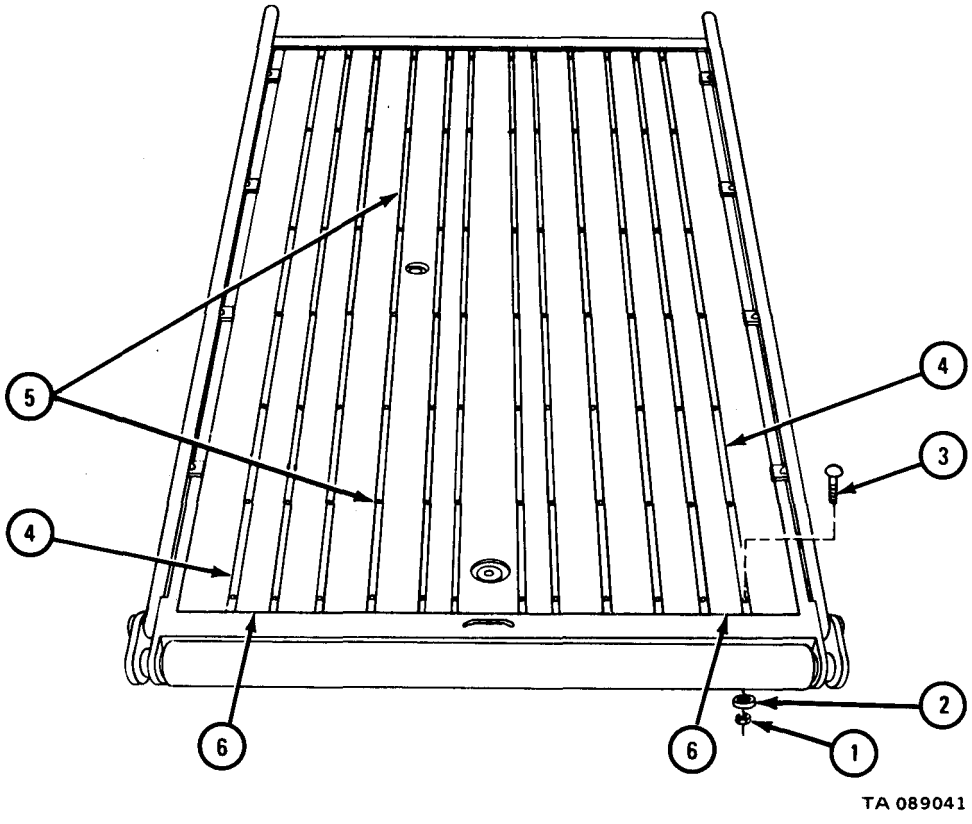

c. Cleaning. Clean hold down slats and floorboards with soapy water and rags. Let parts air dry.

d. Inspection and Repair.

FRAME 1

1. Check that 13 floorboards (1) are not split, rolled or worn. If floorboards are damaged, get new ones.
2. Check that eight hold down slats (2) are not cracked, bent or dented. If hold down slats are damaged, get new ones.
3. Paint parts as needed. Refer to TM 43-0139.

END OF TASK

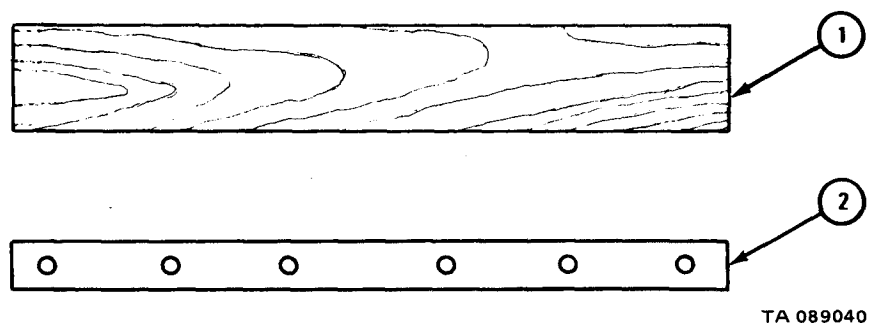

e. Replacement.

FRAME 1

Soldiers A and B 1. Put in 13 floorboards (1).

2. Put in 12 hold down slats (2) and two parts of hold down slat (3).

Soldier A 3. Put in 84 carriage bolts (4).

NOTE

Washers (5) and nuts (6) may have been replaced with locknuts.

Soldier B 4. Working under truck, put on 84 washers (5) and nuts (6).

NOTE

Follow-on Maintenance Action Required:

1. Replace A-frame assemblies. Refer to TM 9-2320-209-10.
2. Replace tailgate and troop seat rack assemblies. Referto TM 9-2320-209-10.
3. Replace front and rear end curtains. Refer to Bow and Tarp Kits Installation and Removal, TM 9-2320-209-10.
4. Replace body tarpaulin. Refer to Bow and Tarp Kits Installation and Removal, TM 9-2320-209-10.

END OF TASK

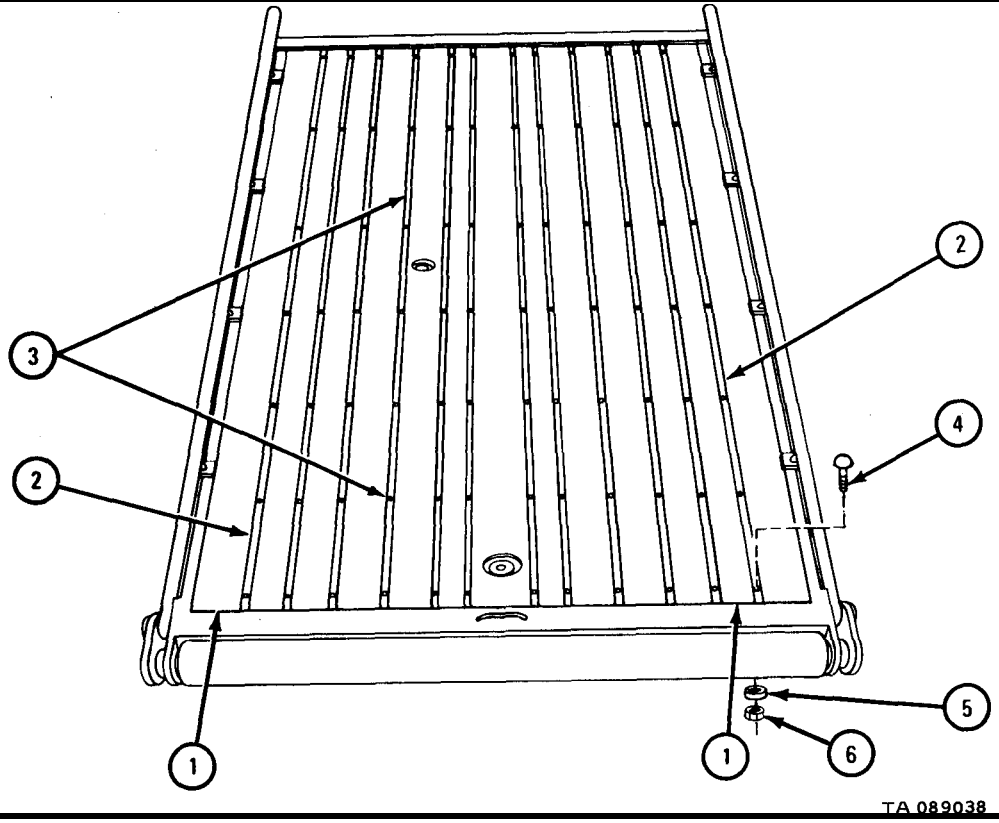

17-63. STEP PLATE AND TOOL BOX REPAIR (TRUCK M756A2).

TOOLS: No special tools required

SUPPLIES: Solvent, dry cleaning, type II (SD-2), Fed. Spec P-D-680
Clean rags

PERSONNEL: One

EQUIPMENT CONDITION : Truck parked, engine off, handbrake set.

a. Preliminary Procedure.

(1) Remove tool box assembly. Refer to TM 9-2320-209-20.

b. Disassembly.

FRAME 1

1. Take off four nuts (1) and screws (2).
2. Take off door (3).

END OF TASK

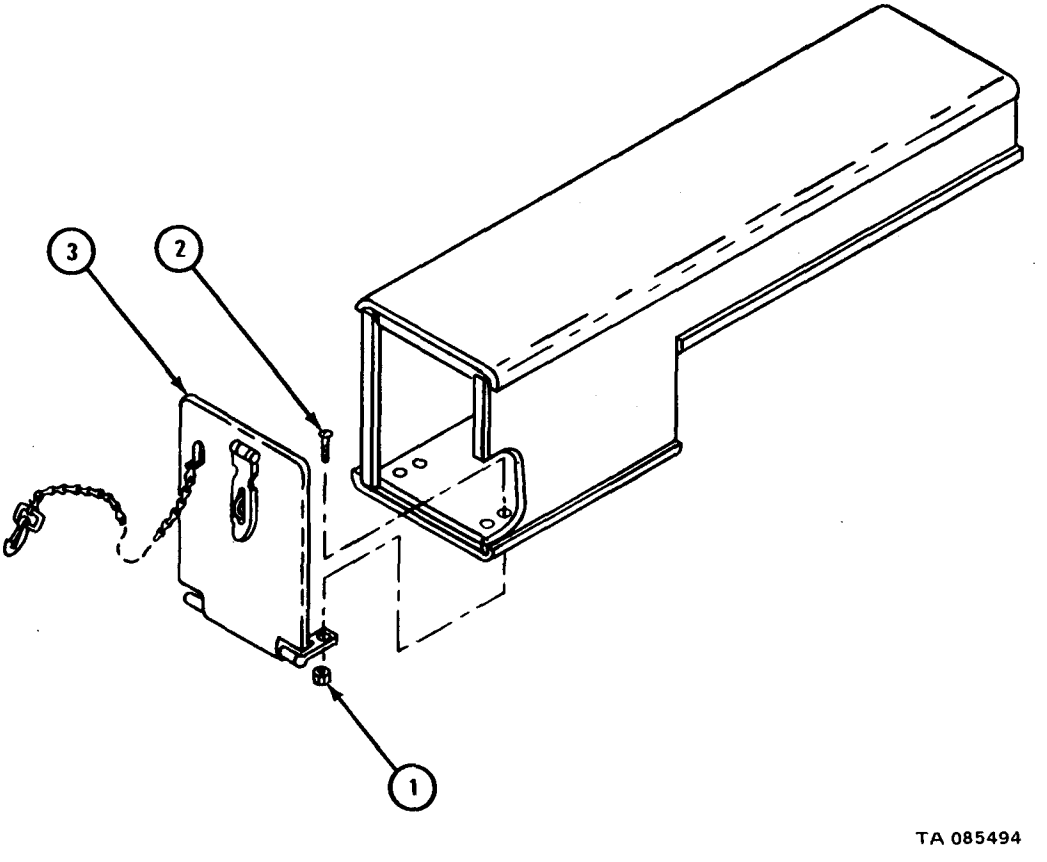

WARNING

Dry cleaning solvent is flammable. Do not use near an open flame. Keep a fire extinguisher nearby when solvent is used. Use only in well-ventilated places. Failure to do this may result in injury to personnel and damage to equipment.

c. Cleaning.

(1) Clean all parts with dry cleaning solvent.

(2) Dry with clean rags.

d. Inspection and Repair.

FRAME 1

1. Check that doors (1 and 2), two latches (3), two clasps (4), tool box (5), and step plate (6) are not bent, cracked or damaged. Check that they do not have any broken welds.
2. Repair damage by straightening or welding. Refer to TM 9-237. If more repair is needed, get new parts.

END OF TASK

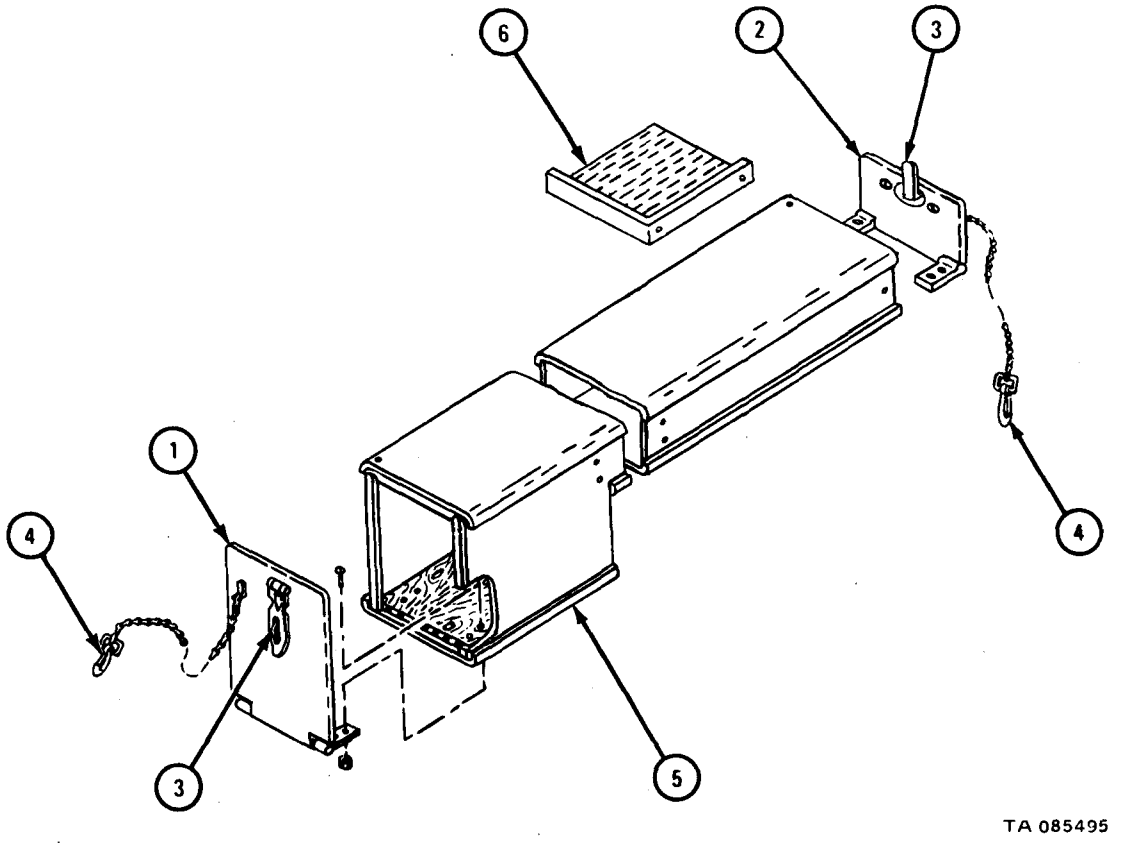

e. Assembly.

FRAME 1

1. Put door (1) in place.
2. Put in four screws (2) and nuts (3).

NOTE

Follow-on Maintenance Action Required:
Replace tool box. Refer to TM 9-2320-209-20.

END OF TASK

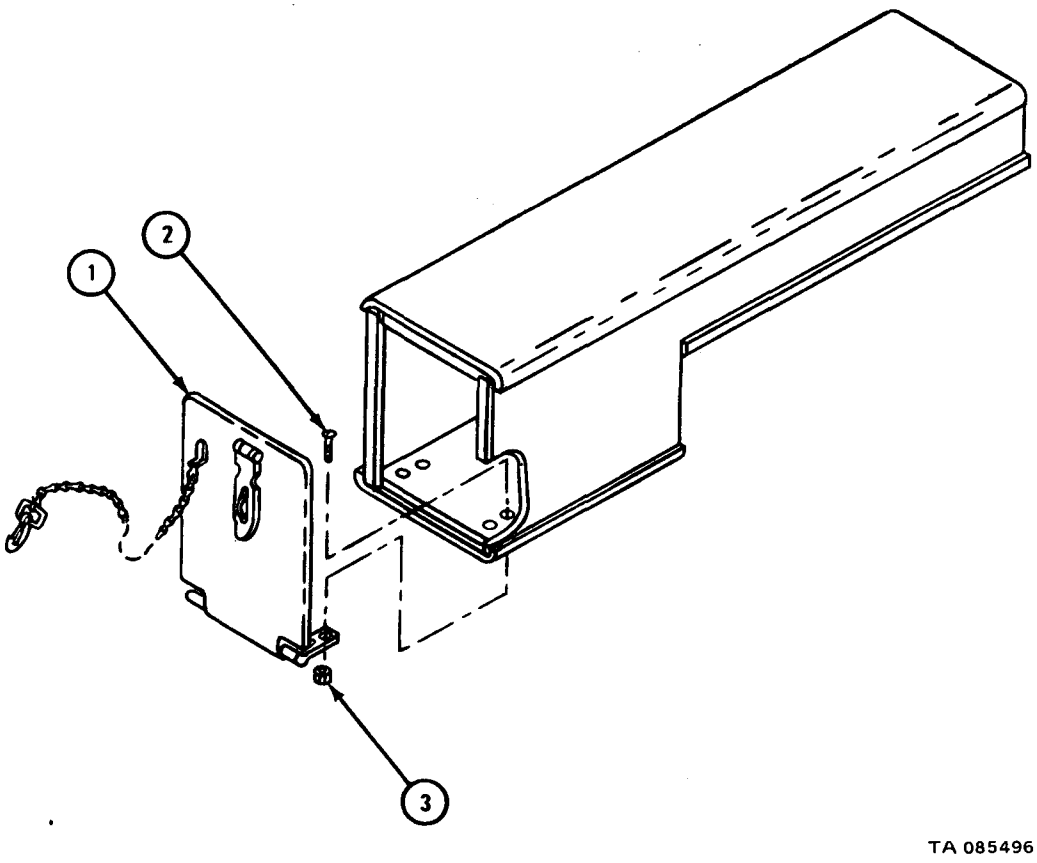

17-64. PIPELINE CONSTRUCTION TRUCK BODY REMOVAL, REPAIR, AND REPLACEMENT (TRUCK M756A2).

TOOLS: No special tools required

SUPPLIES: Solvent, dry cleaning, type II (SD-2), Fed. Spec P-D-680
Clean rags

PERSONNEL: Two

EQUIPMENT CONDITION: Truck parked, engine off, handbrake set.

a. Preliminary Procedures.

(1) Remove side racks and endgate. Refer to Operation of Cargo Trucks, TM 9-2320-209-10.

(2) Remove rear splash guards. Refer toTM 9-2320-209-20.

(3) Unplug taillights and stoplights and take off right rear blackout light mounting bracket. Refer to Taillight and Stoplight Assembly (right side only) Removal and Replacement (Early Model Trucks with Turn Signals) TM 9-2320-209-20.

(4) Remove tailboard roller. Refer to Tailboard Roller Assembly Removal, Repair, and Replacement TM 9-2320-209-20.

(5) Remove auxiliary roller brackets. Refer to Auxiliary Roller Bracket Assembly, Removal, Repair, and Replacement TM 9-2320-209-20.

(6) Remove stiff leg jacks. Refer to Stiff Leg Jack Assembly, Removal, Repair, and Replacement TM 9-2320-209-20.

(7) Remove A-frame gin poles and side clamp assemblies. Refer to TM 9-2320-209-20.

(8) Remove floorboards. Refer to para 17-62.

(9) Remove tool box. Refer to Tool Box Removal and Replacement, TM 9-2320-209-20.

b. Removal.

FRAME 1

1. Take out two screws (1) and nuts (2) and washers (3).
2. Take out two screws (4) and nuts (5) and washers (6).
3. Take out three screws (7) and nuts (8).
4. Do steps 1, 2, and 3 again on other side of body.

GO TO FRAME 2

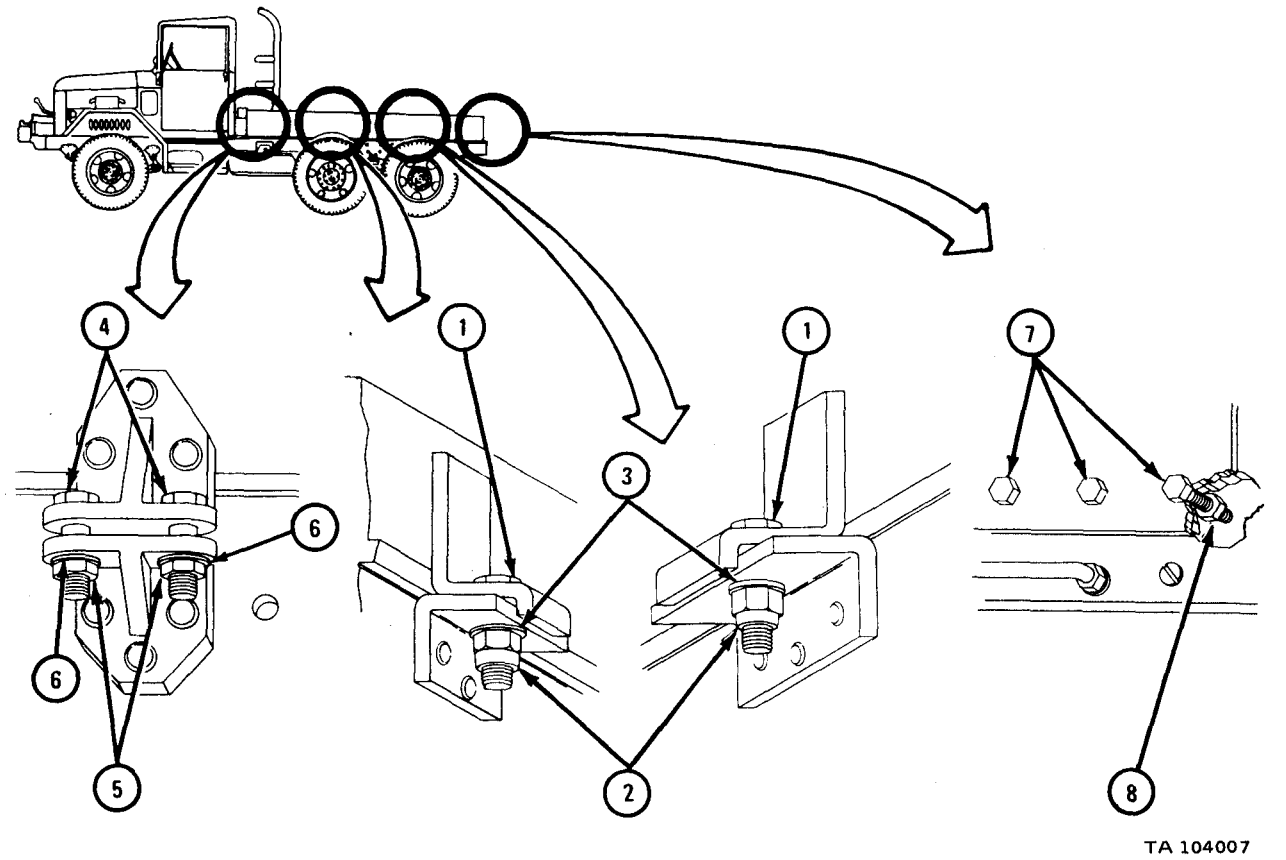

FRAME 2

1. Take out two cotter pins (1).
2. Take out retaining pin (2).
3. Take off sheave mount (3).
4. Do steps 1 through 3 again for other sheave mount (4).

GO TO FRAME 3

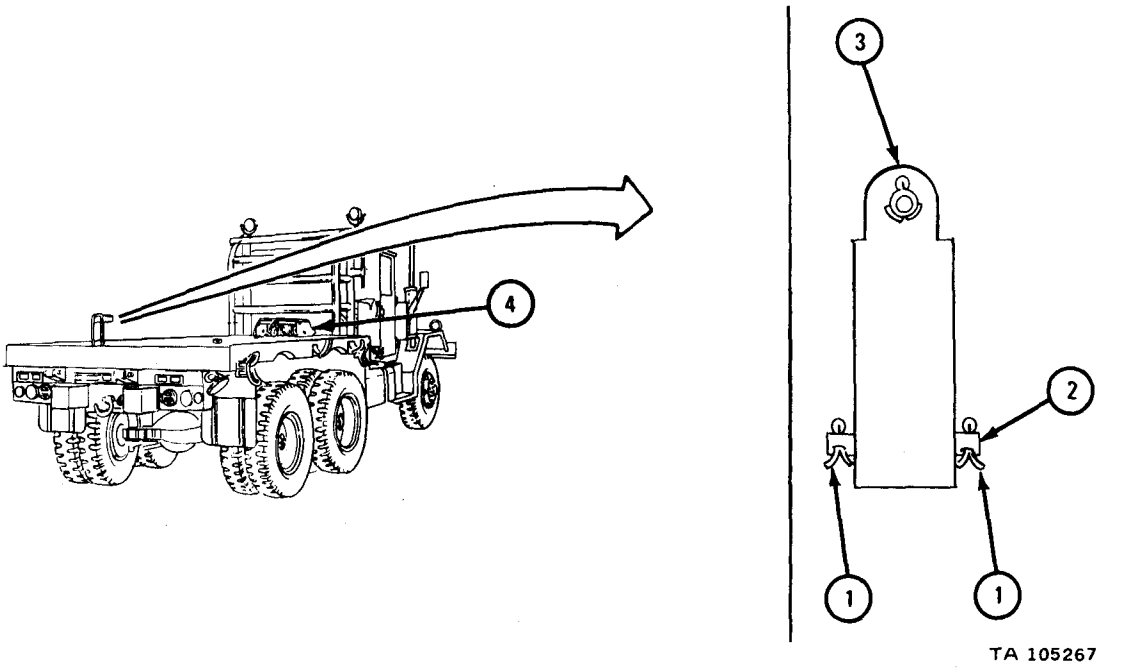

FRAME 3

Soldiers A and B	1. Put chain slings around shackles (1) as shown. Join slings to hoist.
Soldier A	2. Guide body (2) up and off of truck and down on wood blocks as soldier B lifts it.
Soldier B	3. Lift body (2) off of truck and down onto wood blocks as soldier A guides it.
Soldier A	4. Take off chain slings.

END OF TASK

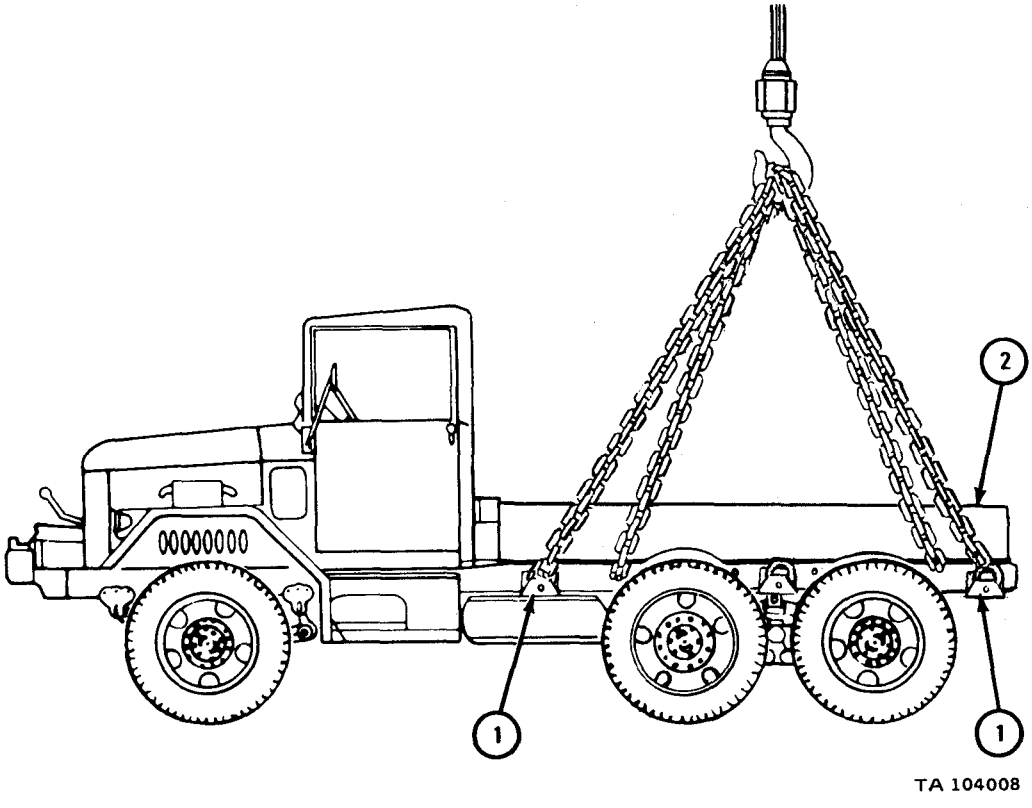

c. Cleaning.

WARNING

Dry cleaning solvent is flammable. Do not use near an open flame. Keep a fire extinguisher nearby when solvent is used. Use only in well-ventilated places. Failure to do this may result in injury to personnel and damage to equipment.

(1) Clean all metal parts in dry cleaning solvent.

(2) Clean wood slats with soap and water.

(3) Dry parts and clean rags.

d. Inspection and Repair.

FRAME 1

1. Check that body (1) and all body brackets (2) are not bent, dented or torn. Check that body and brackets do not have any broken welds.
2. Straighten bent or dented parts. Refer to FM 43-2.
3. Weld tears or broken welds. Refer to TM 9-237.
4. If more repair is needed, get new parts.
5. Paint parts as needed. Refer to TM 43-0139.

END OF TASK

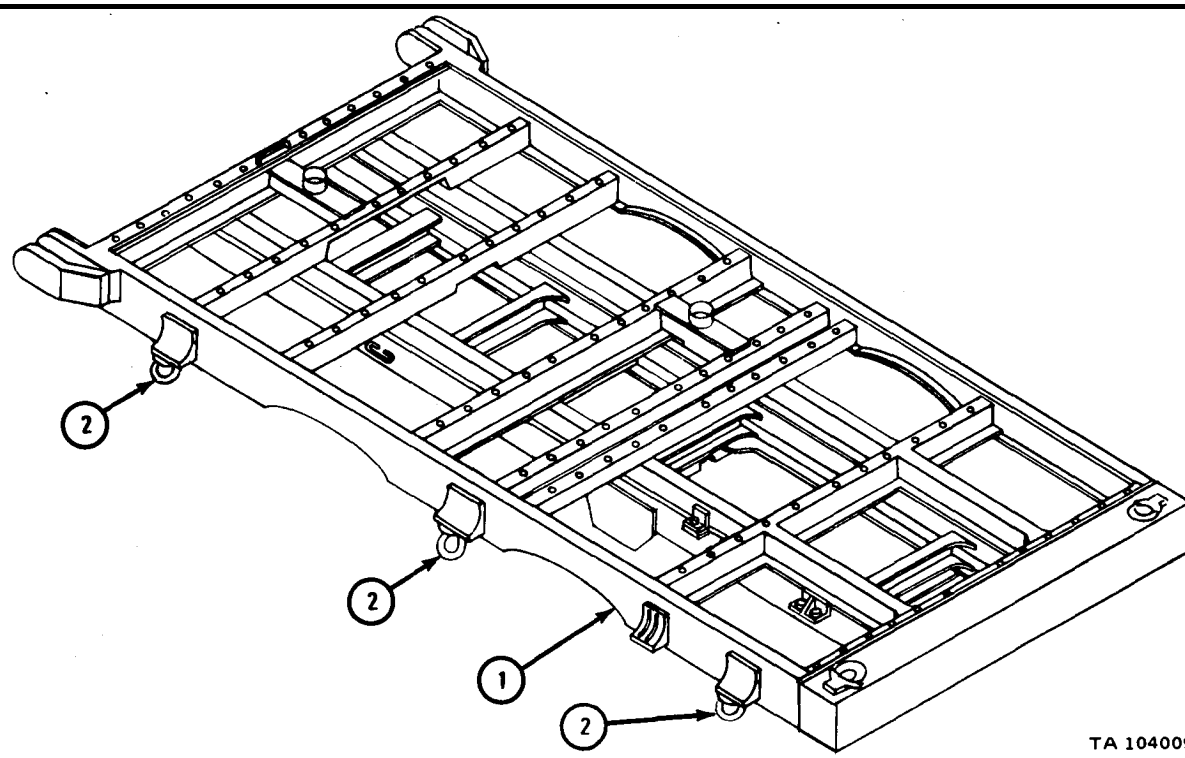

e. Replacement.

FRAME 1

Soldiers A and B	1. Put chain slings around shackles (1) as shown. Join slings to hoist.
Soldier A	2. Guide body (2) off of wood blocks and onto truck as soldier B lifts it.
Soldier B	3. Lift body (2) into place on truck as soldier A guides it.
Soldier A	4. Take off chain slings.

GO TO FRAME 2

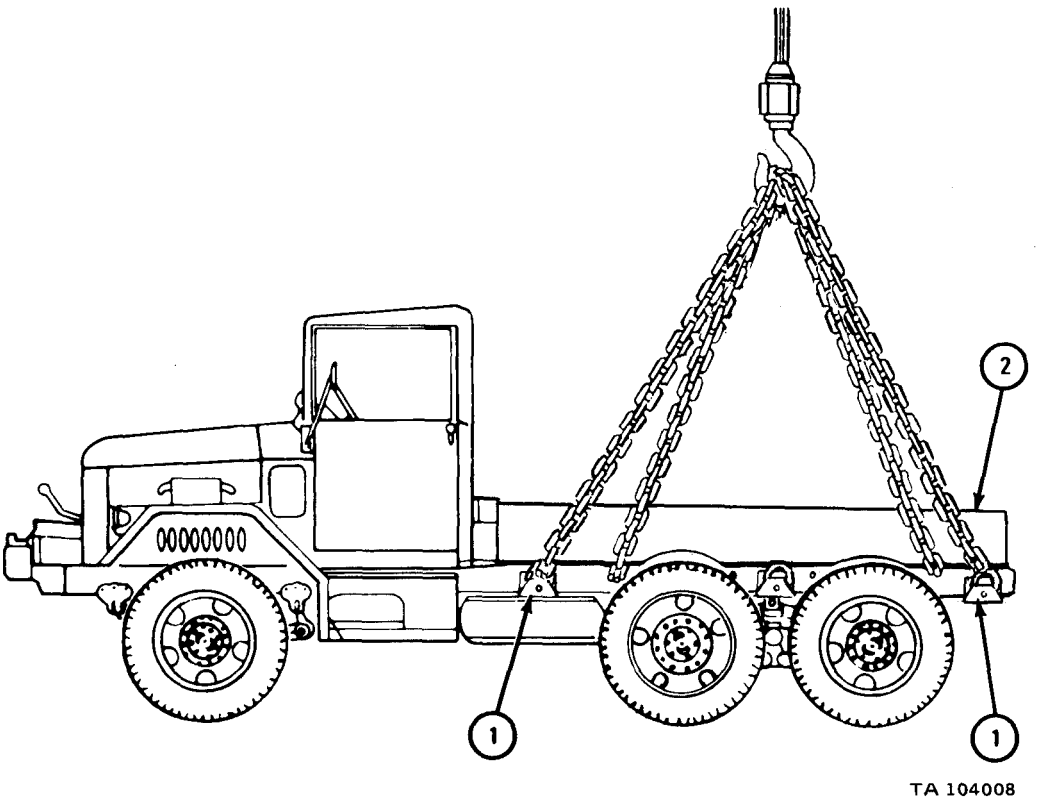

FRAME 2

1. Put in two screws (1) and nuts (2) and washers (3).
2. Put in two screws (4) and nuts (5) and washers (6).
3. Put in three screws (7) and nuts (8).
4. Do steps 1, 2, and 3 again on other side of body.

GO TO FRAME 3

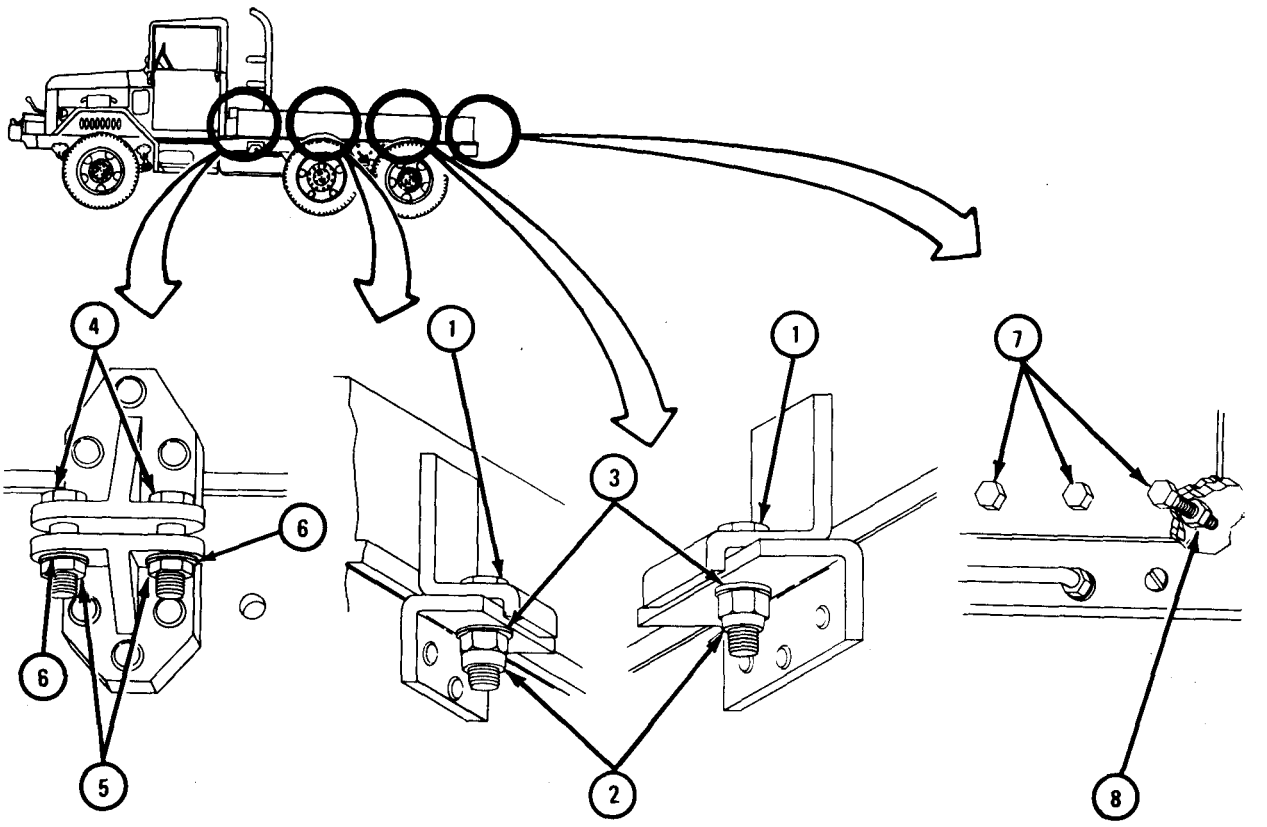

TA 104007

FRAME 3

1. Put sheave mount (1) in place on frame.
2. Put in retaining pin (2).
3. Put in two cotter pins (3).
4. Do steps 1 through 3 again for other sheave mount (4).

GO TO FRAME 4

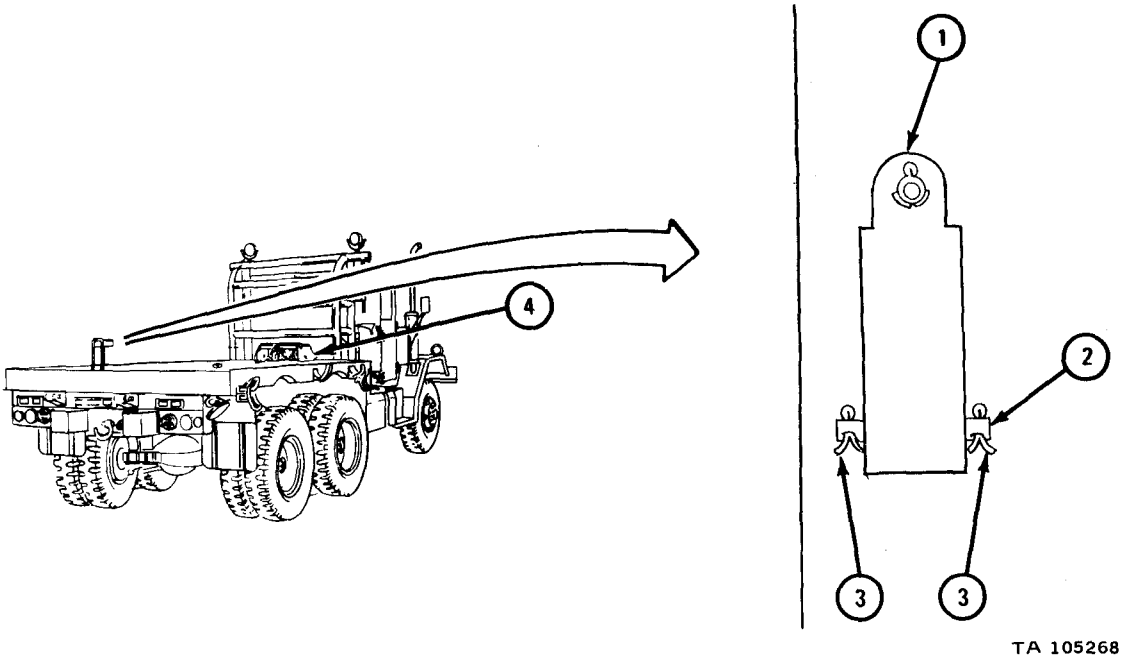

FRAME 4

NOTE

Follow-on Maintenance Action Required:

1. Replace floorboards. Refer to para 17-62.
2. Replace A-frame gin poles and side clamp assemblies. Refer to TM 9-2320-209-20.
3. Replace stiff leg jacks. Refer to Stiff Leg Jack Assembly Removal, Repair and Replacement, TM 9-2320-209-20.
4. Replace auxiliary roller brackets. Refer to Auxiliary Roller Bracket Assembly Removal, Repair and Replacement, TM 9-2320-209-20.
5. Replace tailboard roller. Refer to Tailboard Roller Assembly Removal, Repair and Replacement, TM 9-2320-209-20.
6. Replace right rear blackout light mounting bracket and plug in stoplights and taillights. Refer to Taillight and Stoplight Assembly (right side only) Removal and Replacement (early model trucks with turn signals), TM 9-2320-209-20.
7. Replace rear splash guards. Refer to TM 9-2320-209-20.
8. Replace end gate and side racks. Refer to Operation of Cargo Trucks, TM 9-2320-209-10.
9. Replace tool box bracket. Refer to Tool Box Removal and Replacement, TM 9-2320-209-20.

END OF TASK

17-65. DUMP TRUCK SUBFRAME REMOVAL AND REPLACEMENT.

TOOLS: No special tools required

SUPPLIES: None

PERSONNEL: Two

EQUIPMENT CONDITION: Truck parked, engine off, handbrake set.

a. Preliminary Procedures.

(1) Remove dump body. Refer to para 17-68.

(2) Remove hydraulic hoist control linkage. Refer to Hydraulic Hoist Control Linkage Removal, Replacement, and Adjustment TM 9-2320-209-20.

(3) Remove hydraulic hoist pump drive shaft. Refer to Hydraulic Hoist Pump Drive Shaft Removal, Repair, and Replacement, TM 9-2320-209-20.

b. Removal.

FRAME 1

1. Take out two screws with self-locking nuts (1). Take off fender with bracket (2).
2. Take out screw with self-locking nut (3).
3. Do steps 1 and 2 again for other rear fender.

GO TO FRAME 2

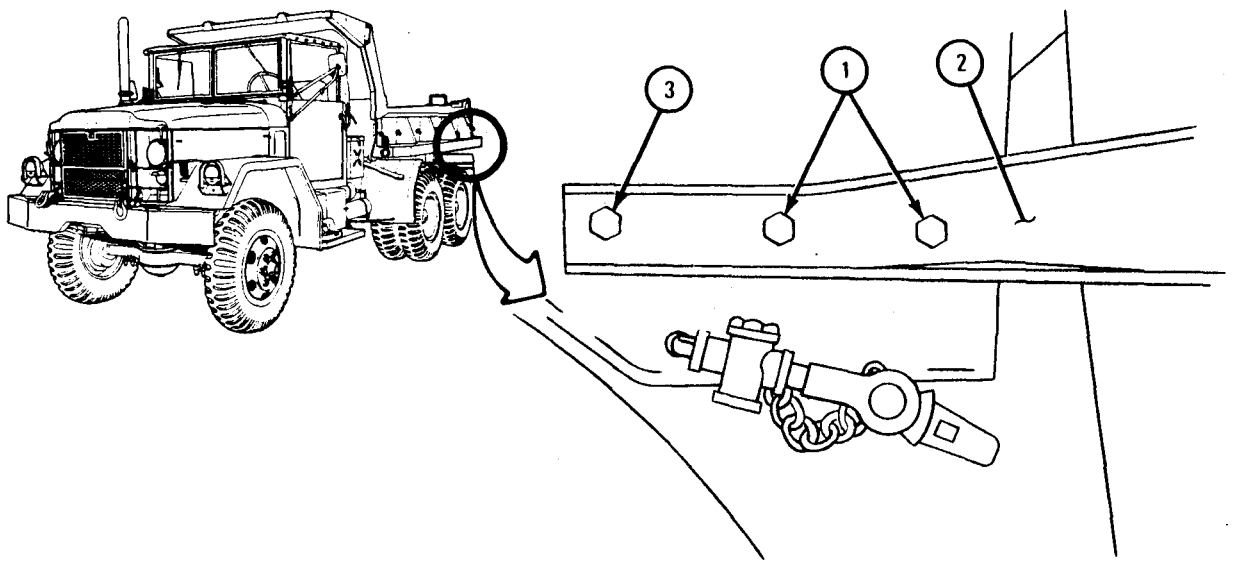

FRAME 2

1. Take out two screws with self-locking nuts (1).
2. Take out three screws with self-locking nuts (2).
3. Take out screw with self-locking nut (3) and take off fender with fender bracket (4).
4. Do steps 1, 2, and 3 again for right fender.

GO TO FRAME 3

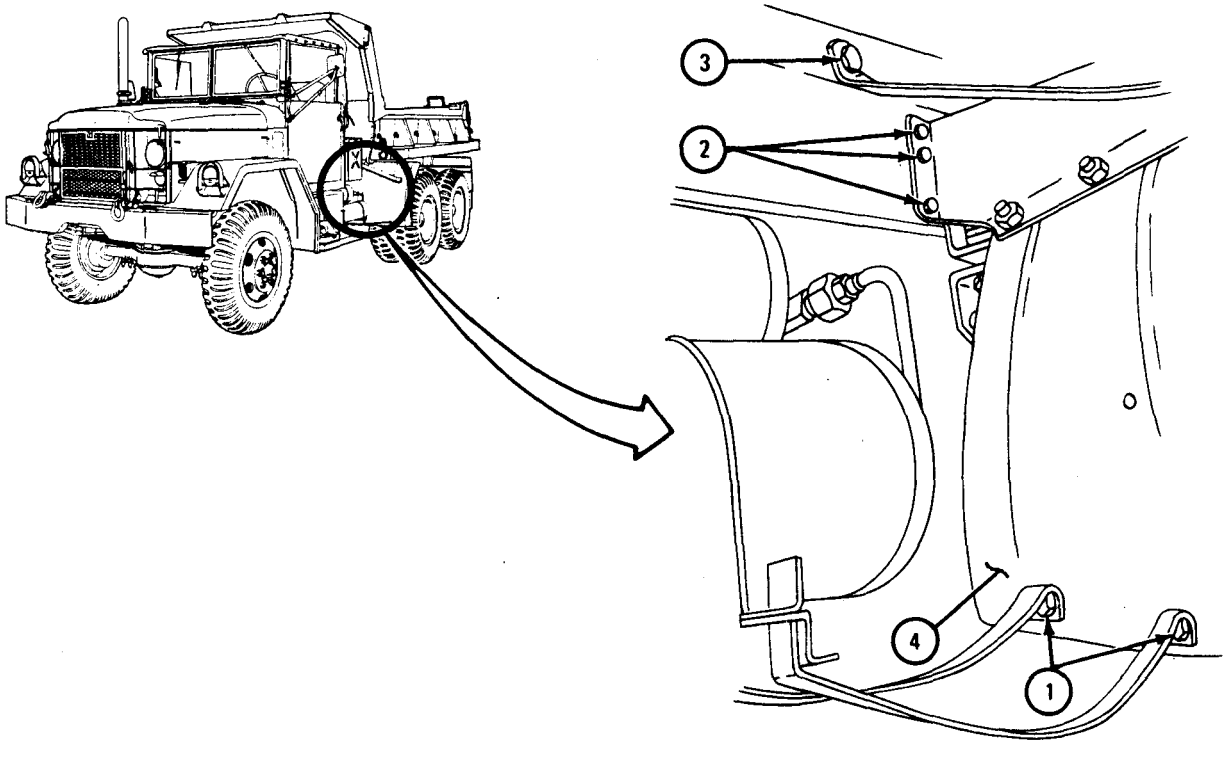

TA 088355

FRAME 3

1. Take out four screws with self-locking nuts (1) and push trailer electrical connector (2) through hole in subframe (3).

GO TO FRAME 4

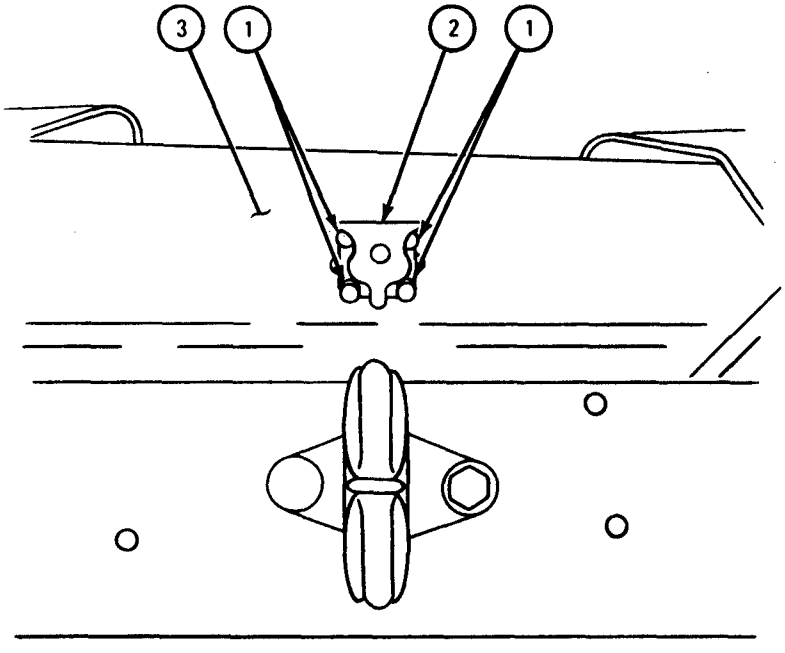

TA 088356

FRAME 4

1. Take off two self-locking nuts with washers (1). Take out two bolts (2) and two springs with four spring retainers (3).
2. Do step 1 again for other side.

GO TO FRAME 5

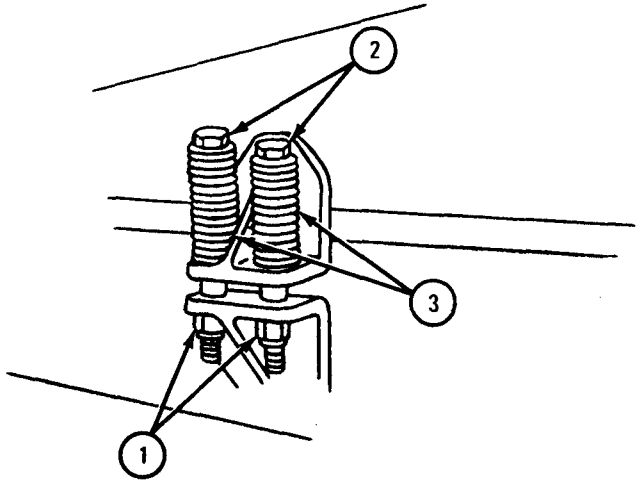

TA 088357

FRAME 5

Soldiers A and B

1. Put lifting sling on subframe assembly (1). Lift subframe assembly (1) off truck (2) and place it on wood blocks.
2. Take off two wood sills (3).

END OF TASK

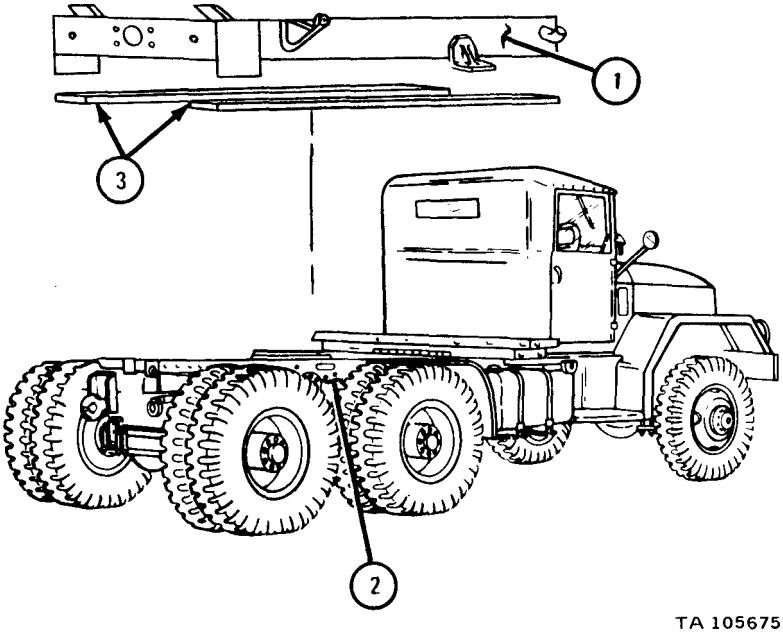

TA 105675

c. Replacement.

FRAME 1

1. Put two wood sills (1) in place on truck frame (2).

Soldiers A and B

2. With lifting sling on subframe (3), lift subframe (3) onto truck frame (2).

GO TO FRAME 2

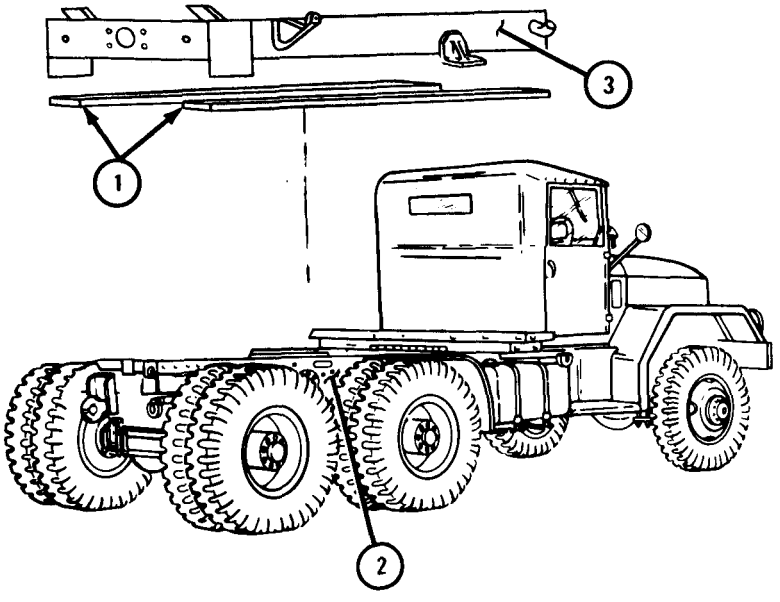

TA 119053

FRAME 2

1. Put on two springs with four spring retainers (1). Put in two bolts (2).
2. Put on two self-locking nuts with washers (3).
3. Do steps 1 and 2 again for the other side.

GO TO FRAME 3

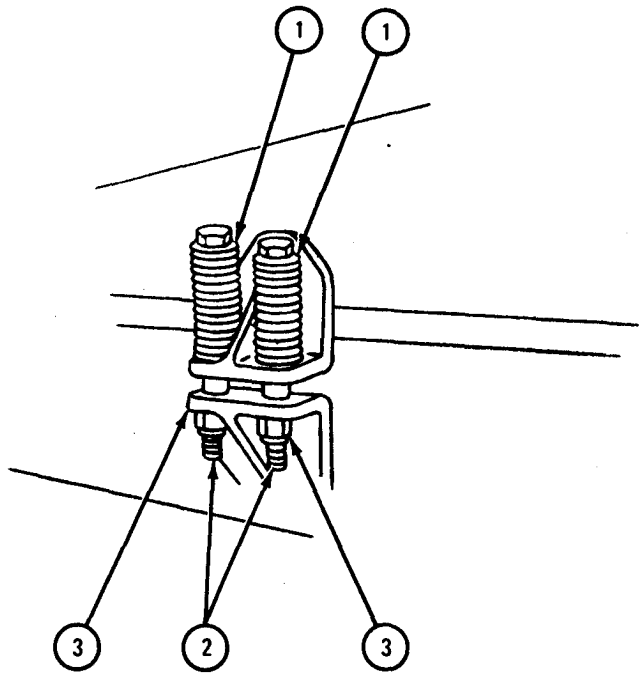

TA 088377

FRAME 3

1. Put fender (1) in place. Put in three screws and three self-locking nuts (2).
2. Do step 1 again for other rear side.

GO TO FRAME 4

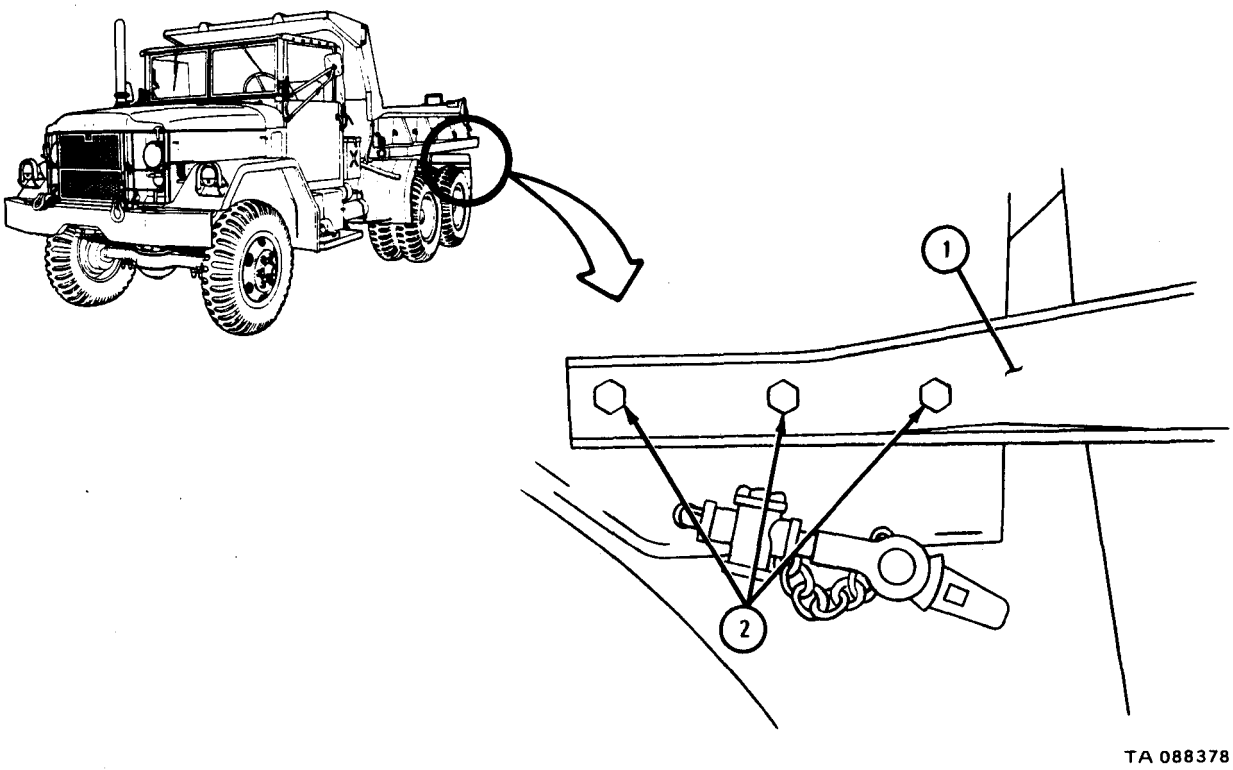

FRAME 4

1. Put fender (1) in place. Put in three screws with self-locking nuts (2).
2. Put in screw with self-locking nut (3).
3. Put in two screws with self-locking nuts (4).
4. Do steps 1, 2, and 3 again on other side.

GO TO FRAME 5

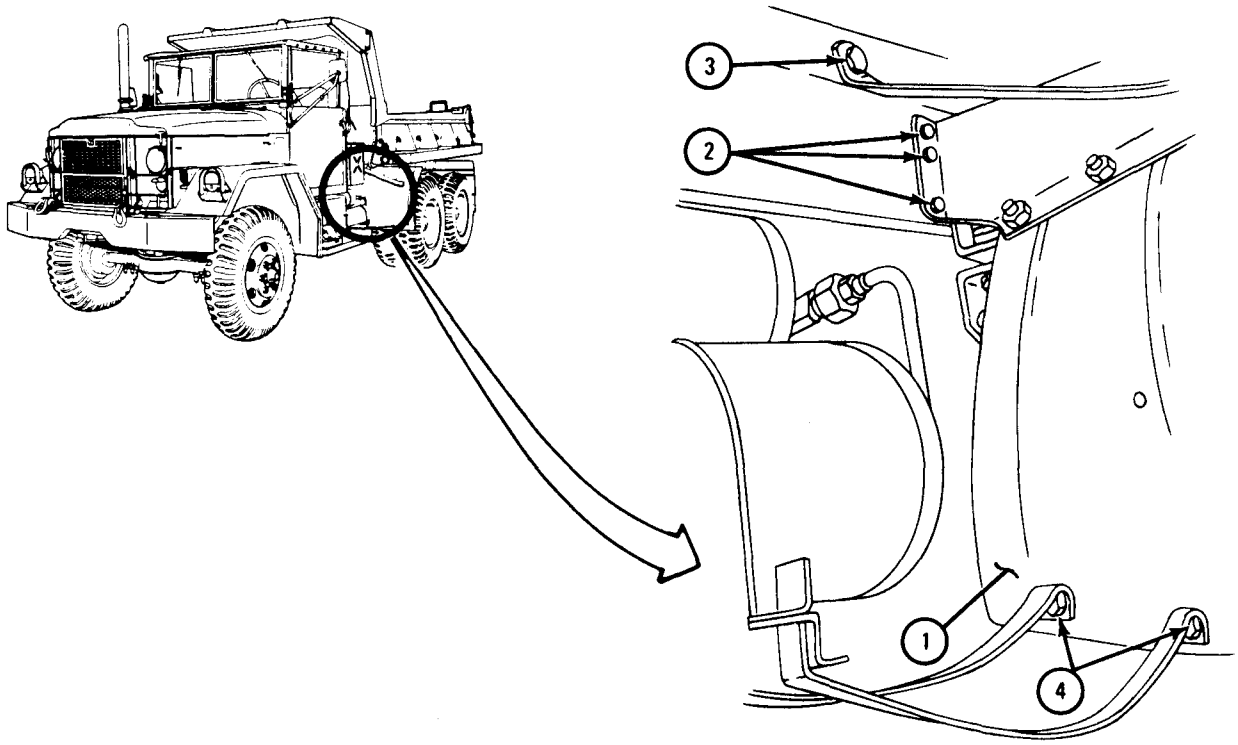

TA 088379

FRAME 5

1. Put trailer electrical receptacle (1) and ground wire (2) through hole in subframe (3) and aline holes. Put in four screws with self-locking nuts (4).

NOTE

Follow-on Maintenance Action Required:

1. Replace hydraulic pump propeller shaft. Refer to TM 9-2320-209-20.
2. Replace hydraulic hoist control linkage. Refer to TM 9-2320-209-20.
3. Replace dump body. Refer to para 17-68.

END OF TASK

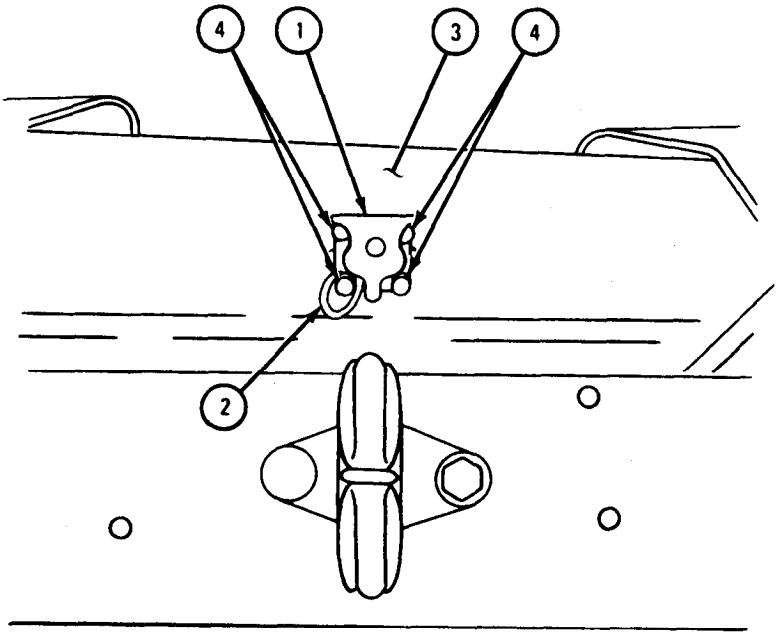

TA 105676

17-66. DUMP BODY TAILGATE ASSEMBLY REMOVAL, REPAIR, AND REPLACEMENT.

TOOLS: No special tools required

SUPPLIES: Solvent, dry cleaning, type II (SD-2), Fed. Spec P-D-680

PERSONNEL: One

EQUIPMENT CONDITION: Truck parked, engine off, handbrake set.

Preliminary Procedure. Open tailgate latches by pulling release lever forward. Refer to Operation of Dump Trucks, TM 9-2320-209-10.

b. Removal.

FRAME 1

1. Wrap hoist chain through two steps (1) and hook hoist chain onto hoist as shown.
2. Take two chains (2) off catches (3).
3. Using hoist, support weight of tailgate (4).

WARNING

Make sure weight of tailgate (4) is held by chain hoist before taking out two pins (5). Tailgate may fall, causing injury to personnel.

4. Take out two pins (5).
5. Using hoist, take off tailgate (4) and set it down on wood blocks.
6. Take off hoist chain.

END OF TASK

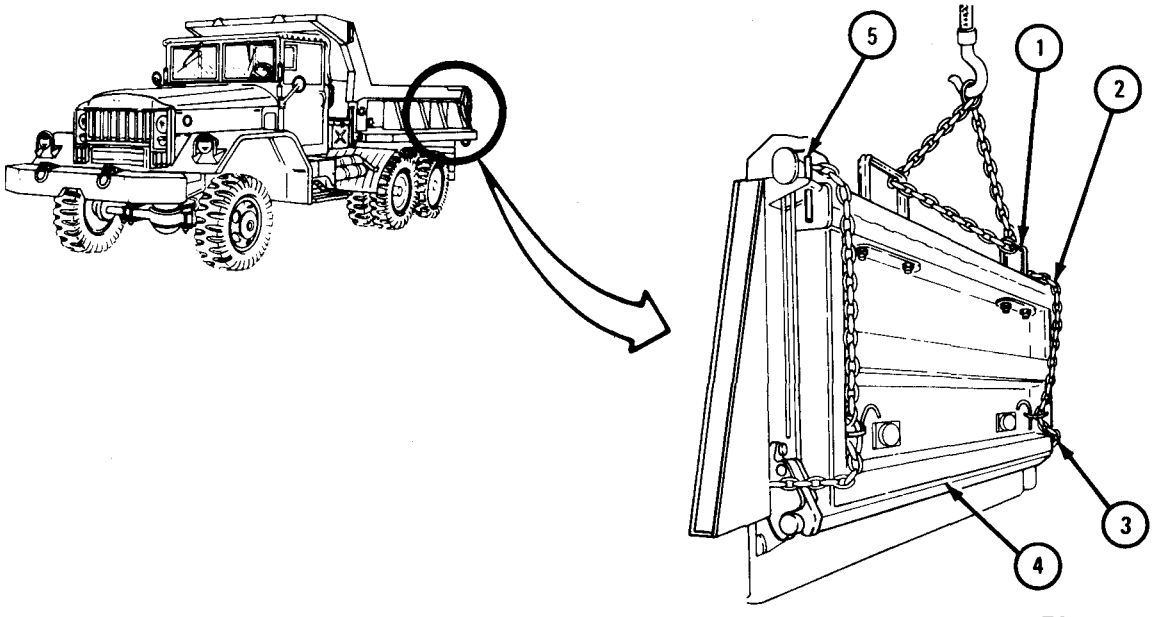

FRAME 1

1. Take out four capscrews (1) and four nuts (2). Take off two steps (3).

END OF TASK

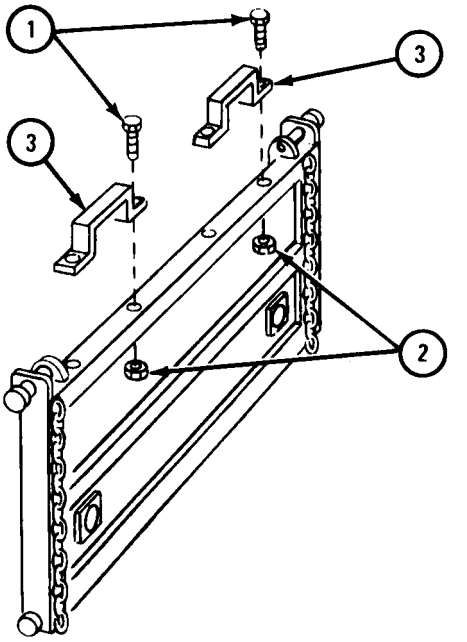

TA 085403

d. Cleaning. There are no special cleaning procedures needed. Refer to cleaning procedures given in Part 1, para 1-3.

e. Inspection and Repair.

FRAME 1

1. Check that tailgate (1) ,and two steps (2) have no bends, dents, cracks or other damage. If parts are damaged, repair by welding or straightening. Refer to TM 9-237 and FM 43-2.

END OF TASK

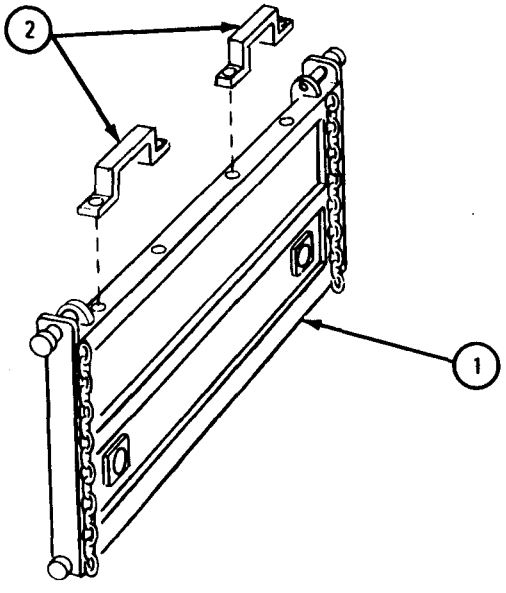

TA 085404

f. Assembly.

FRAME 1

1. Put two steps (1) on tailgate (2). Put in four capscrews (3). Put on four nuts (4).
END OF TASK

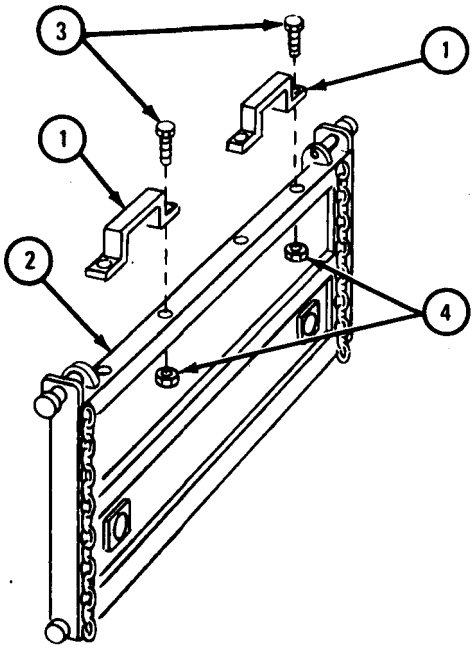

TA 085405

g. Replacement.

FRAME 1

1. Wrap hoist chain through two steps (1) and hook hoist chain onto hoist as shown.
2. Using hoist, put tailgate (2) into place on truck as shown.
3. Put in two pins (3) and take off hoist chain.
4. Hook two chains (4) onto catches (5).

NOTE

Follow-on Maintenance Action Required:

Close tailgate latches. Refer to Operation of Dump Trucks, TM 9-2320-209-10.

END OF TASK

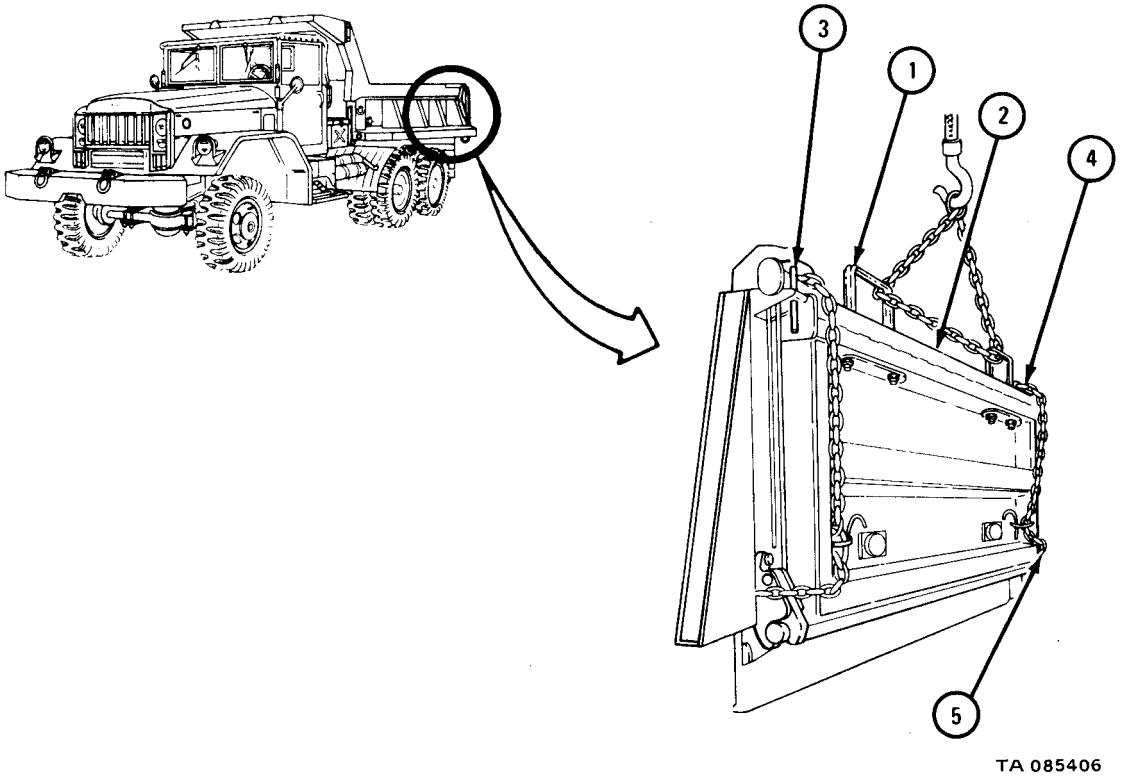

17-67. END GATE CONTROL LINKAGE REMOVAL, REPAIR, AND REPLACEMENT (TRUCK M342A2).

TOOLS: No special tools required

SUPPLIES: None

PERSONNEL: Two

EQUIPMENT CONDITION: Truck parked, engine off, handbrake set.

a. Preliminary Procedure. Raise dump body part way and put in safety braces. Refer to Dump Body Safety Brace Locking and Unlocking, TM 9-2320-209-20.

b. Removal.

WARNING

Never work under dump body unless safety braces are properly positioned. If these steps are not taken personnel can be seriously injured.

FRAME 1

1. Pull hand control lever (1) forward and down to open position.
2. Take off nut (2) and back off nut (3) on control rod (4).
3. Take off clevis locknut (5) and clevis bolt (6) with washer (7).
4. Take tailgate control clevis (8) off control rod (4).

GO TO FRAME 2

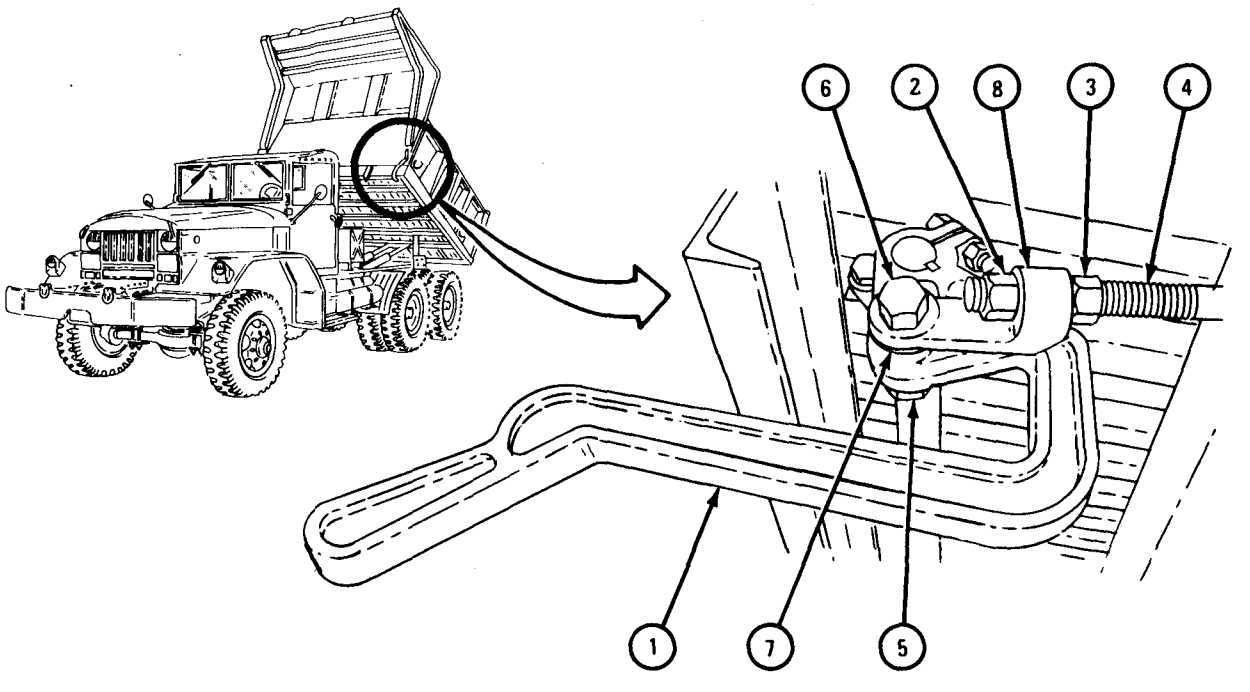

FRAME 2

1. Loosen capscrew (1) and self-locking nut (2).
2. Lightly tap control arm (3) off cross shaft (4).
3. Take out woodruff key (5).

GO TO FRAME 3

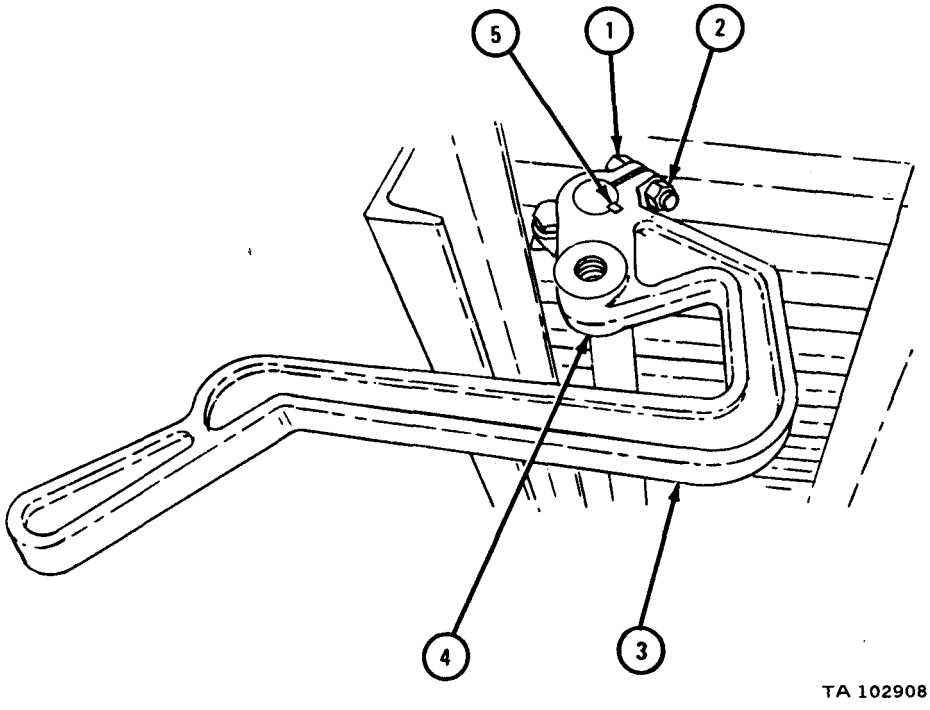

FRAME 3

1. Take off nut (1) and back off nut (2) on right side control rod (3).
2. Take off clevis nut (4), clevis bolt (5), and washer (6).
3. Take clevis (7) and nut (2) off control rod (3).

GO TO FRAME 4

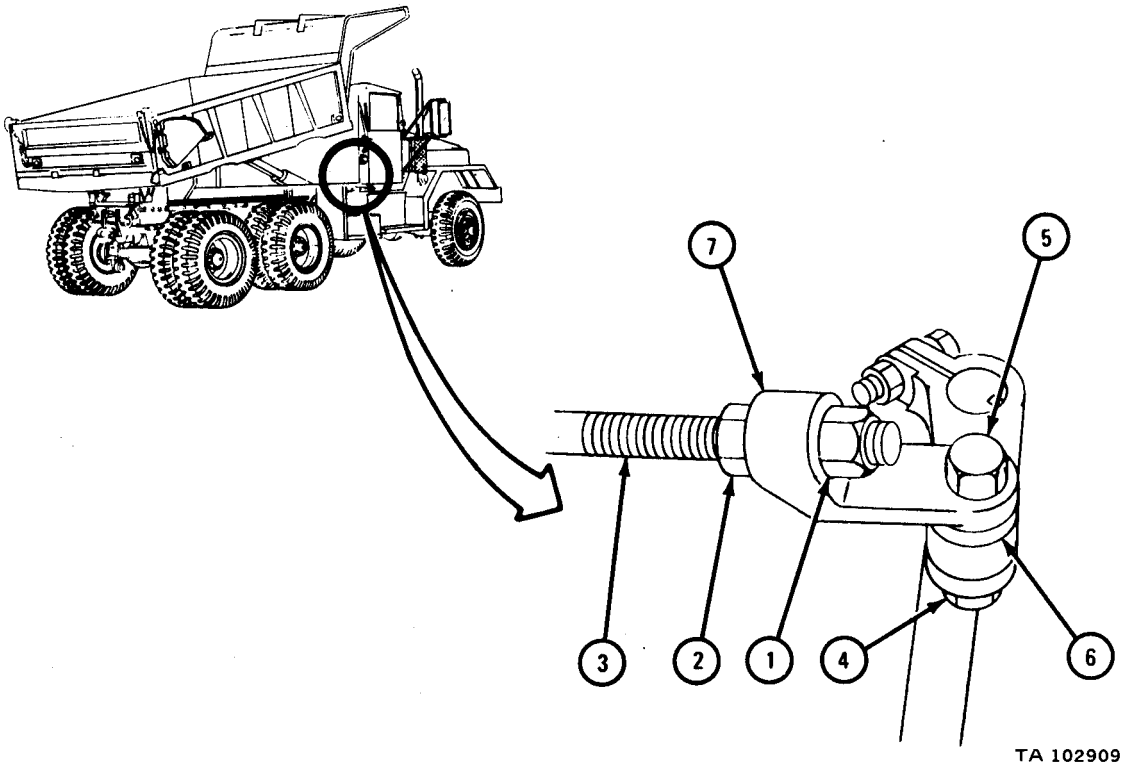

FRAME 4

1. Loosen nut (1).
2. Lightly tap lever (2) off control shaft (3).
3. Take out woodruff key (4).
4. Take off nut (1) and take out capscrew (5).

GO TO FRAME 5

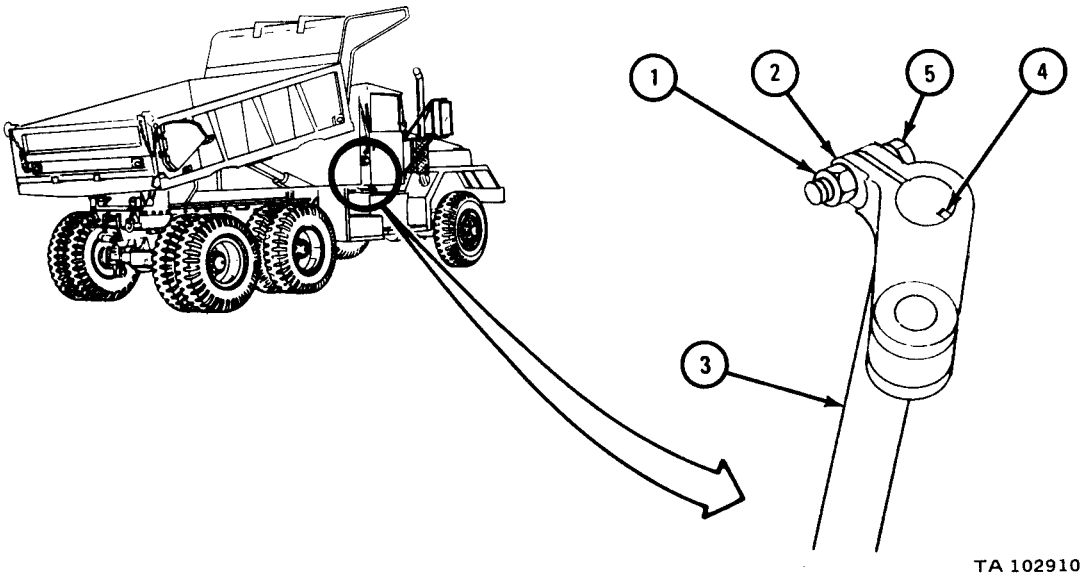

FRAME 5

Soldier A 1. Hold cross shaft assembly (1) in place.

Soldier B 2. Take off six capscrews (2) and six locknuts (3).

Soldiers A and B 3. Take off cross shaft assembly (1). Slide off three bearings (4).

GO TO FRAME 6

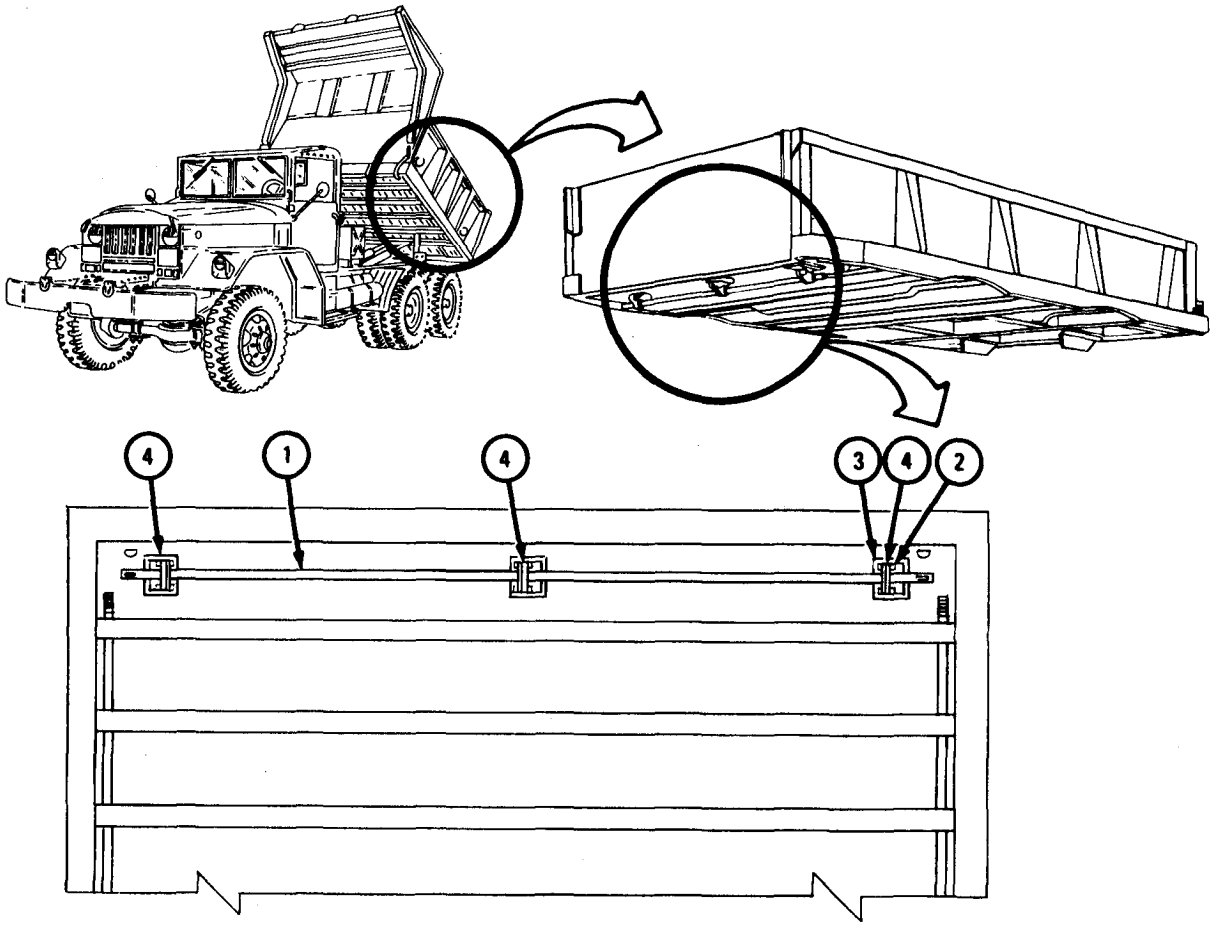

TA 102911

FRAME 6

1. Take out two cotter pins (1) from two castellated link nuts (2).
2. Take off two link nuts (2). Take out main rod link (3) and link plate (4).
3. Take off three capscrews (5) and three nuts (6) with three washers (7). Take off tailgate control latch (8).
4. Do steps 1 through 3 again for tailgate control latch (9) on other side of dump body.

GO TO FRAME 7

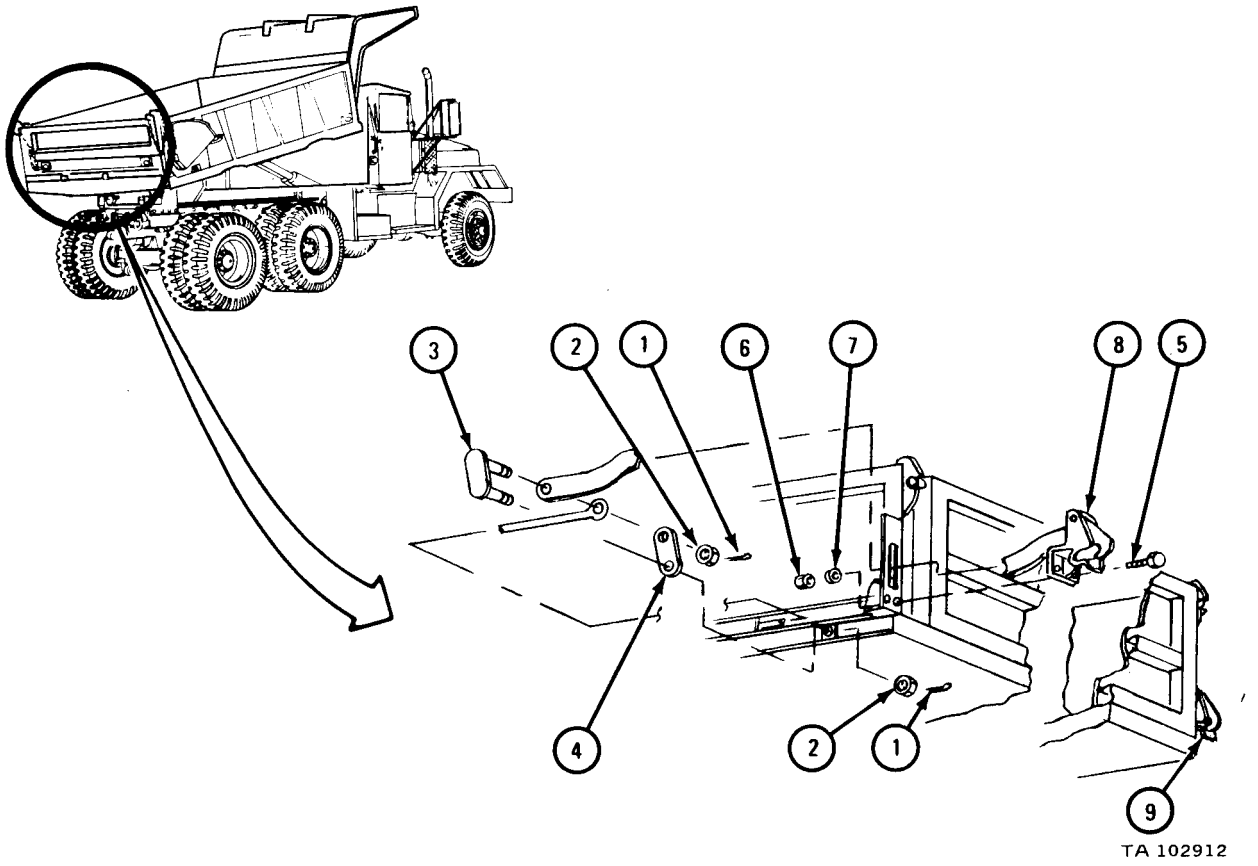

FRAME 7

1. Take out two control rods (1) through front of dump body (2).

END OF TASK

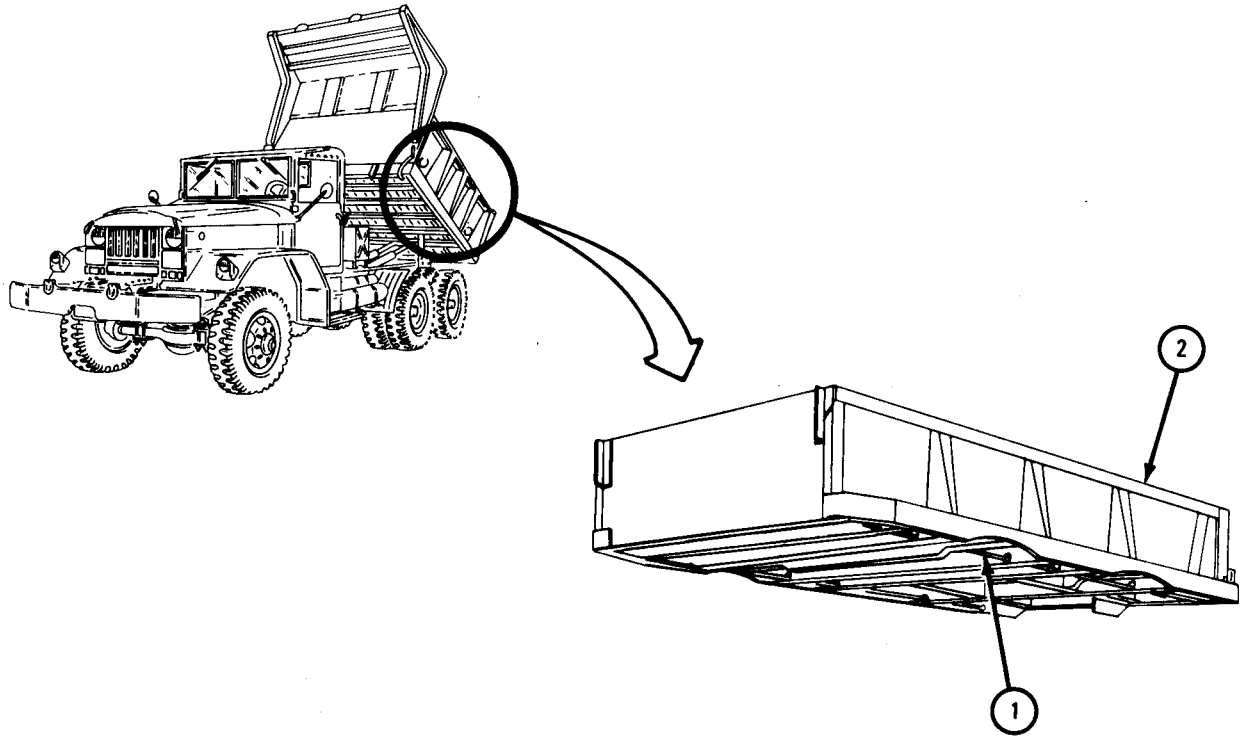

TA 102913

c. Cleaning and Inspection.

FRAME 1

1. Clean threads on two tailgate main control rods (1). Check that threads are not damaged.
2. Check that main control rods (1) are not bent.
3. Put two tailgate control clevises (2) on main control rods (1). Check that there is not too much play in bores. Check that castings are not cracked.

GO TO FRAME 2

FRAME 2

1. Check three tailgate control shaft (1) is not bent.
2. Put three tailgate cross shaft bearings (2) on tailgate control shaft (1).
3. While holding tailgate control shaft (1), twist each bearing (2) on cross shaft to make sure there is not too much play in bearing bores (3).
4. Check play in bores and check that there are no cracks in lever (4) or control arm (5).

GO TO FRAME 3

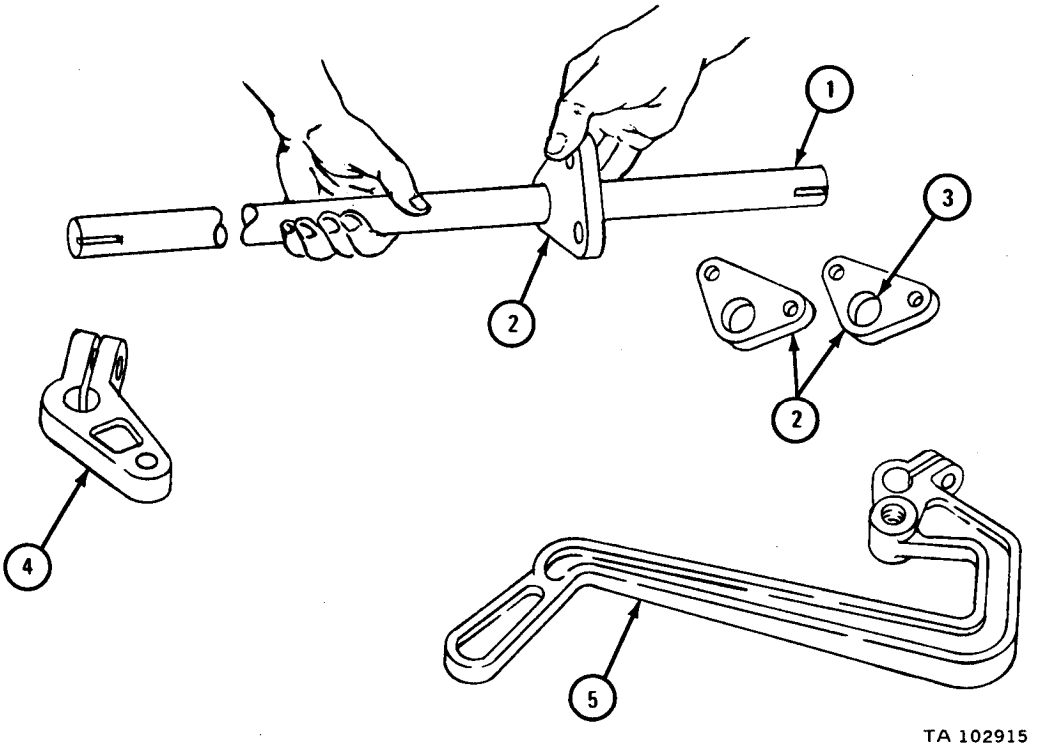

FRAME 3

1. Clean threads on tailgate main rod link (1). Check that it is not cracked or bent and that threads are not damaged.
2. Put link plate (2) on tailgate main rod link (1) and check that there is no play in parts. Check that link plate has no cracks.

GO TO FRAME 4

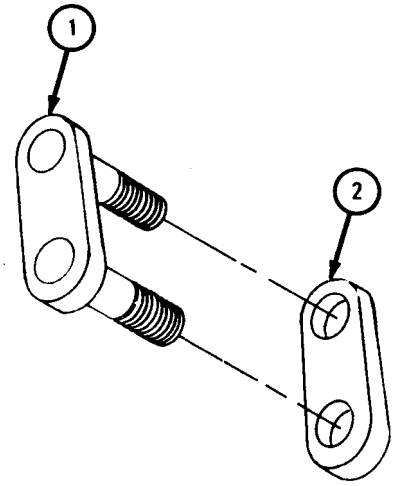

TA 102916

FRAME 4

1. Check that two latches (1) have no cracks and wear. Move latch bar (2) on latch in and out to see that latch opens and closes.
2. Check that all capscrews and nuts have no damaged threads.

END OF TASK

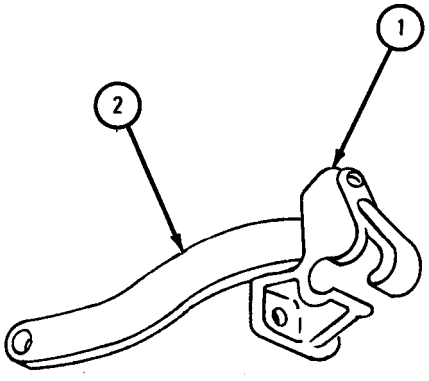

TA 102917

d. Repair. Repair is limited to getting new parts for damaged ones. Throw away damaged parts and use new parts in their place.

e. Replacement.

WARNING

Never work under dump body unless safety braces are properly positioned. If these steps are not taken, personnel can be seriously injured.

FRAME 1

1. Put two main control rods (1) in dump body (2) through holes in cross-members (3) until rod eye (4) is between last two crossmembers (5 and 6).

GO TO FRAME 2

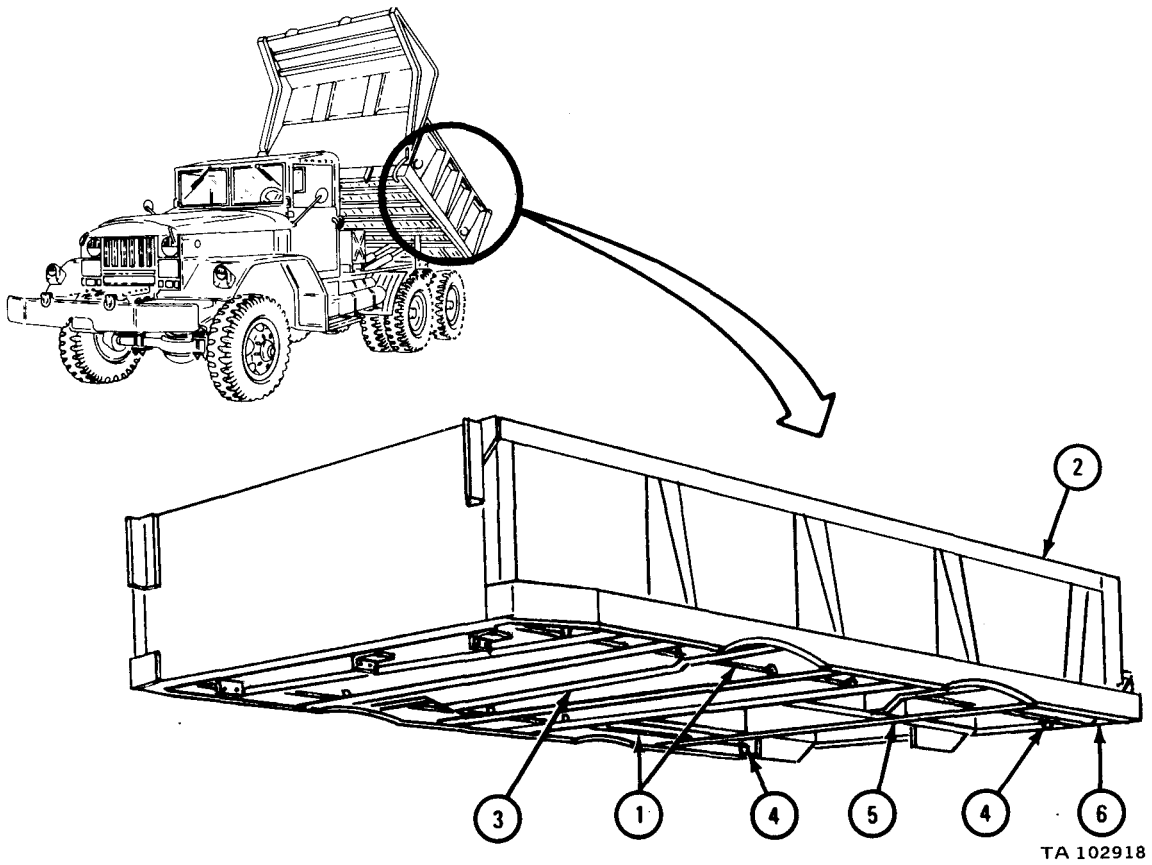

FRAME 2

1. Put latch bar (1) with latch (2) through slot (3) in rear of dump body (4).
2. Put in three capscrews (5) three nuts (6), and three lockwashers (7).
3. Do steps 1 and 2 again to put on latch (8) on other side of dump body.

GO TO FRAME 3

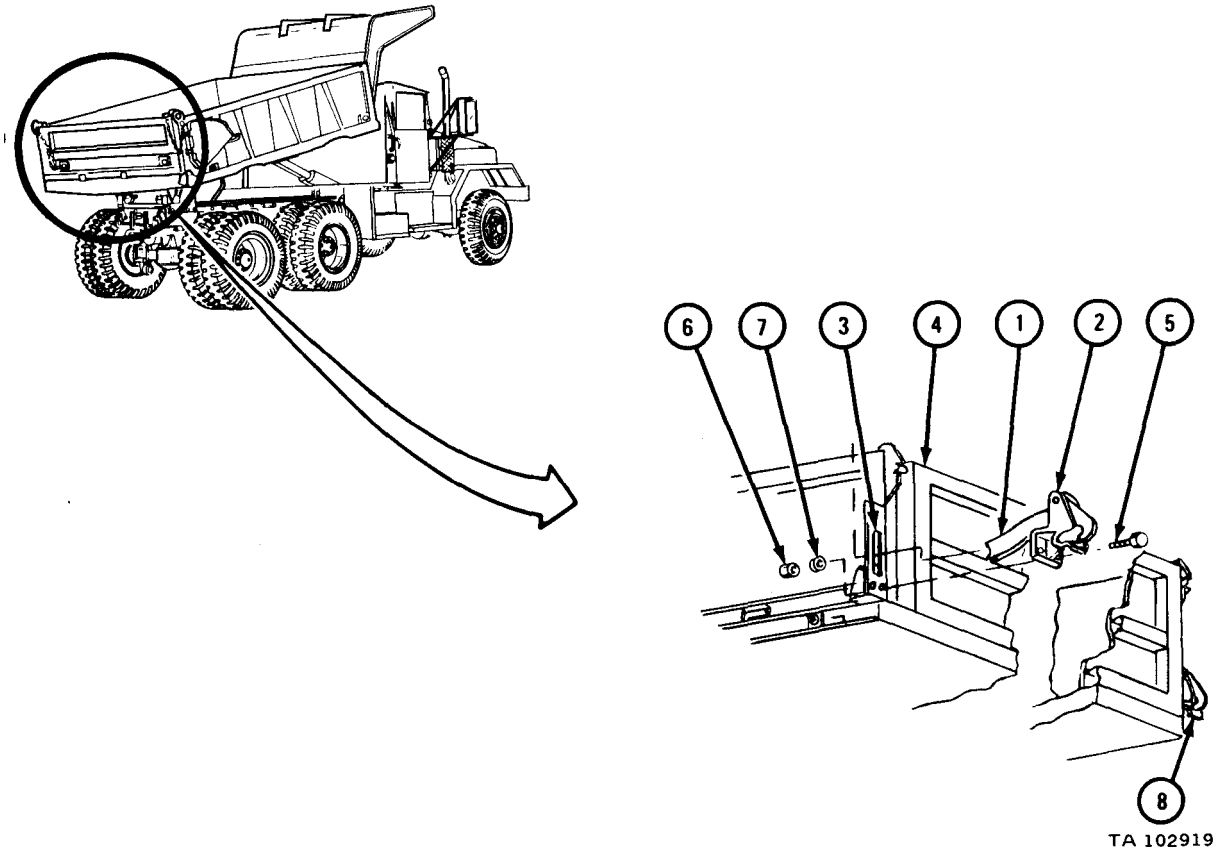

FRAME 3

1. Put one stud on main rod link (1) through holes in control rod (2) and latch bar (3), and put other stud on main rod link through chassis rail (4).
2. Put link plate (5) over studs on main rod link (1).
3. Put on two castellated nuts (6) and aline holes in nuts and studs for cotter pins (7).
4. Put two cotter pins (7) through nuts (6).
5. Do steps 1 through 4 again on other side of truck.

GO TO FRAME 4

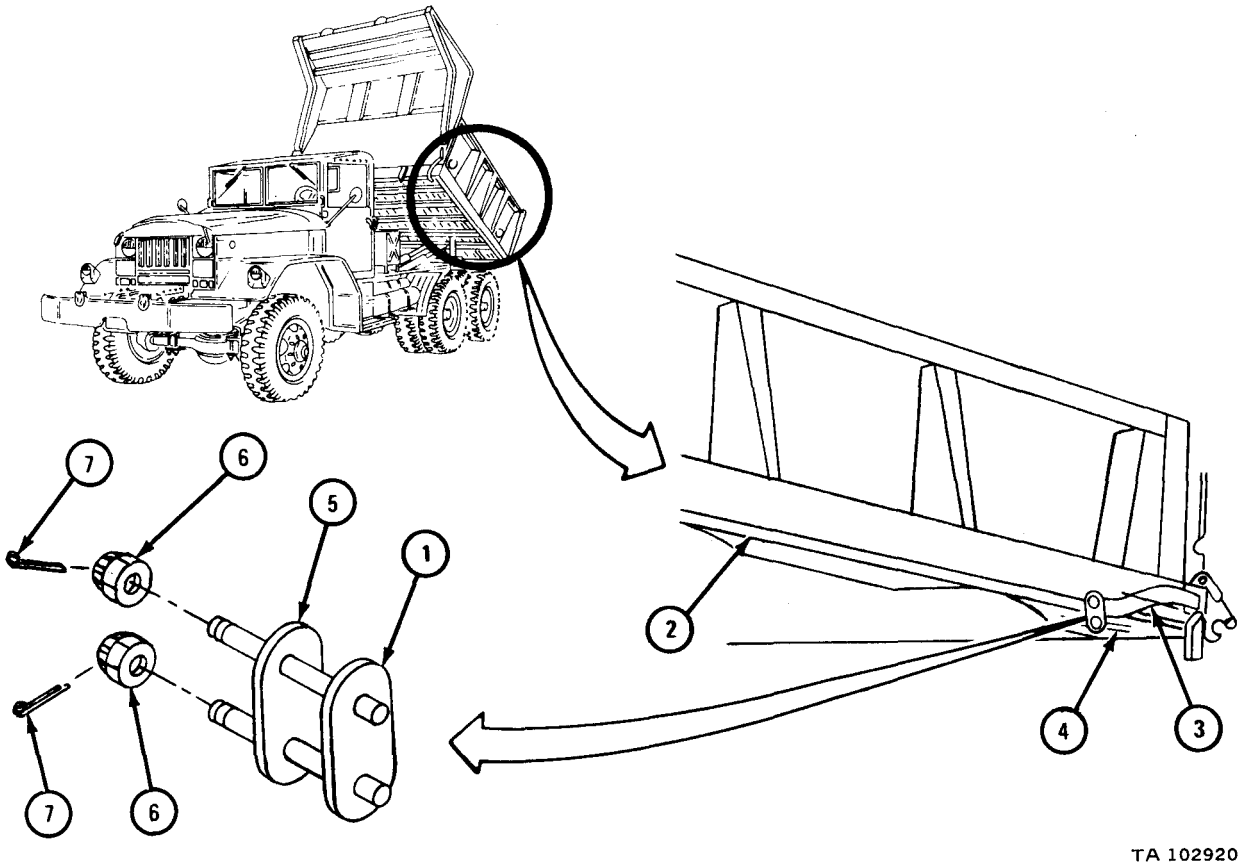

FRAME 4

Soldier A 1. Put three tailgate control shaft bearings (1) on tailgate control shaft (2).

2. Hold control shaft (2) with three bearings (1) in place.

Soldier B 3. Aline bolt holes in bearing (1) with holes in brackets (3) on body. Put in six capscrews (4) with six locknuts (5).

4. Put two nuts (6) all the way on two main control rods (7).

GO TO FRAME 5

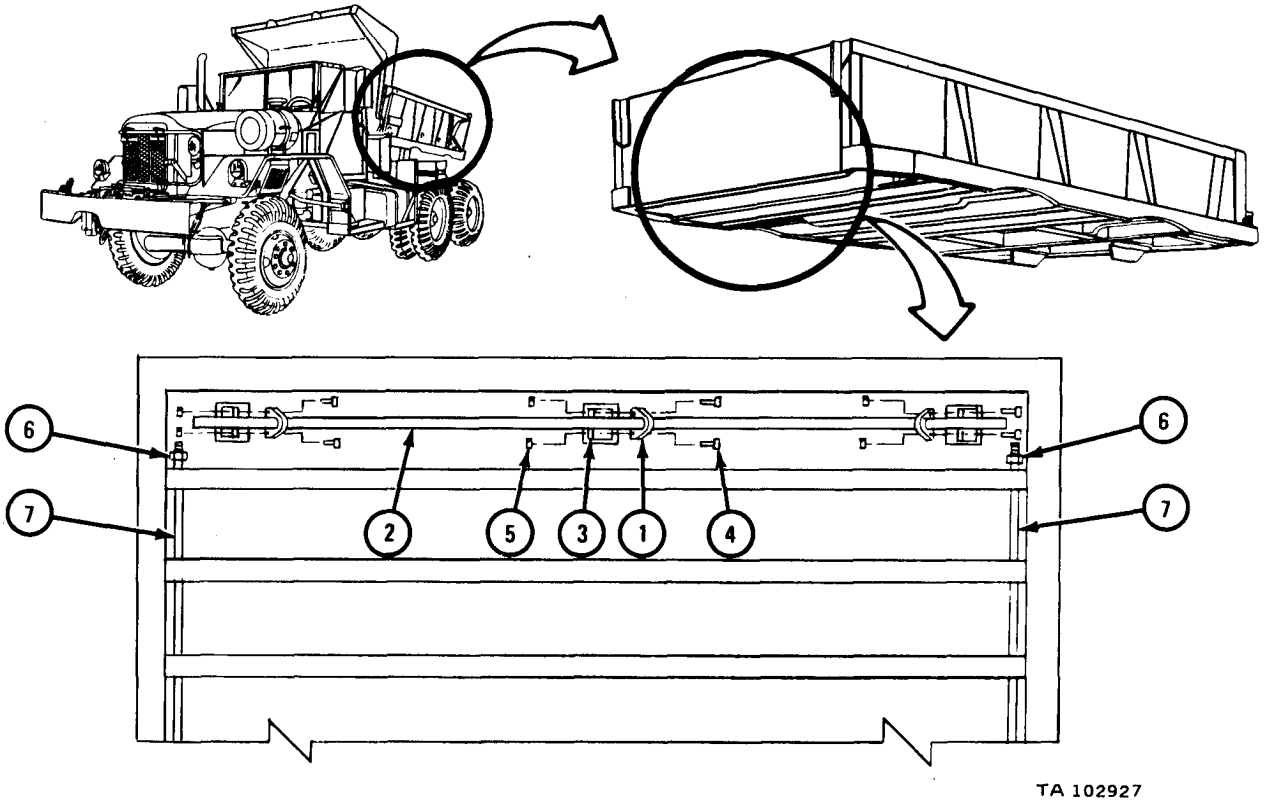

FRAME 5

1. Lightly tap woodruff key (1) into each end of tailgate cross shaft (2).

GO TO FRAME 6

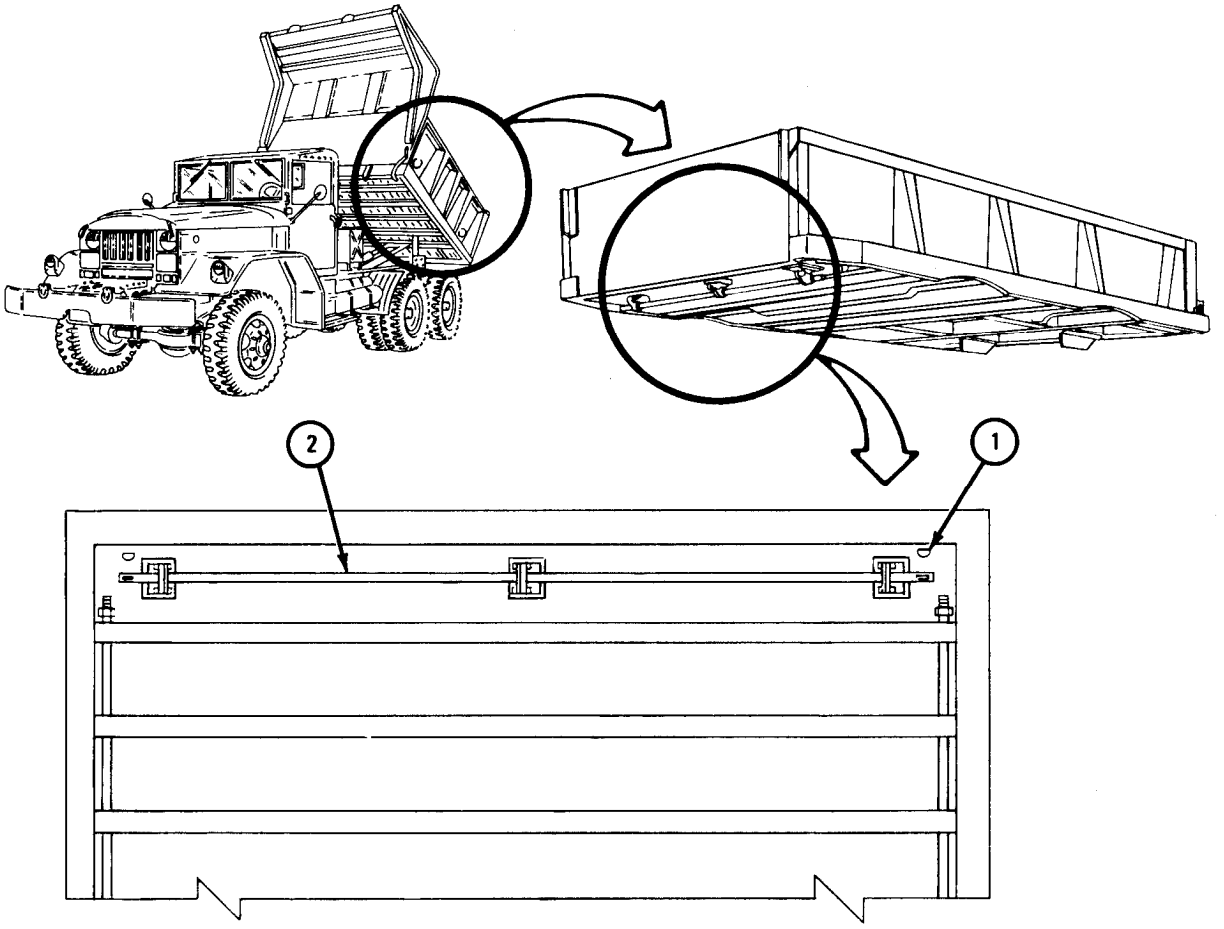

TA 102921

FRAME 6

1. Aline keyway on lever (1) with woodruff key (2) on shaft (3). Lightly tap lever onto shaft.
2. Put in capscrew (4) with locknut (5).

GO TO FRAME 7

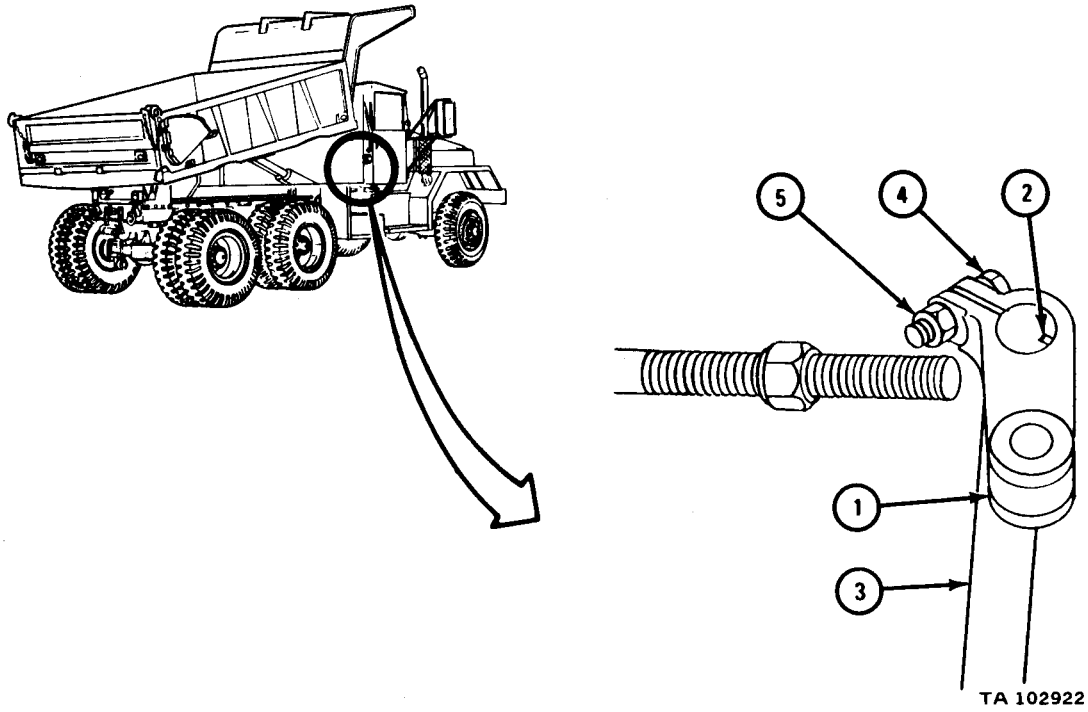

FRAME 7

1. Put clevis (1) on main control rod (2). Screw on nut (3).
2. Put washer (4) between clevis (1) and lever (5) and aline holes in clevis and lever. Put in clevis bolt (6) and nut (7).
3. Tighten clevis bolt (6) and nut (7).
4. Tighten nut (8).

GO TO FRAME 8

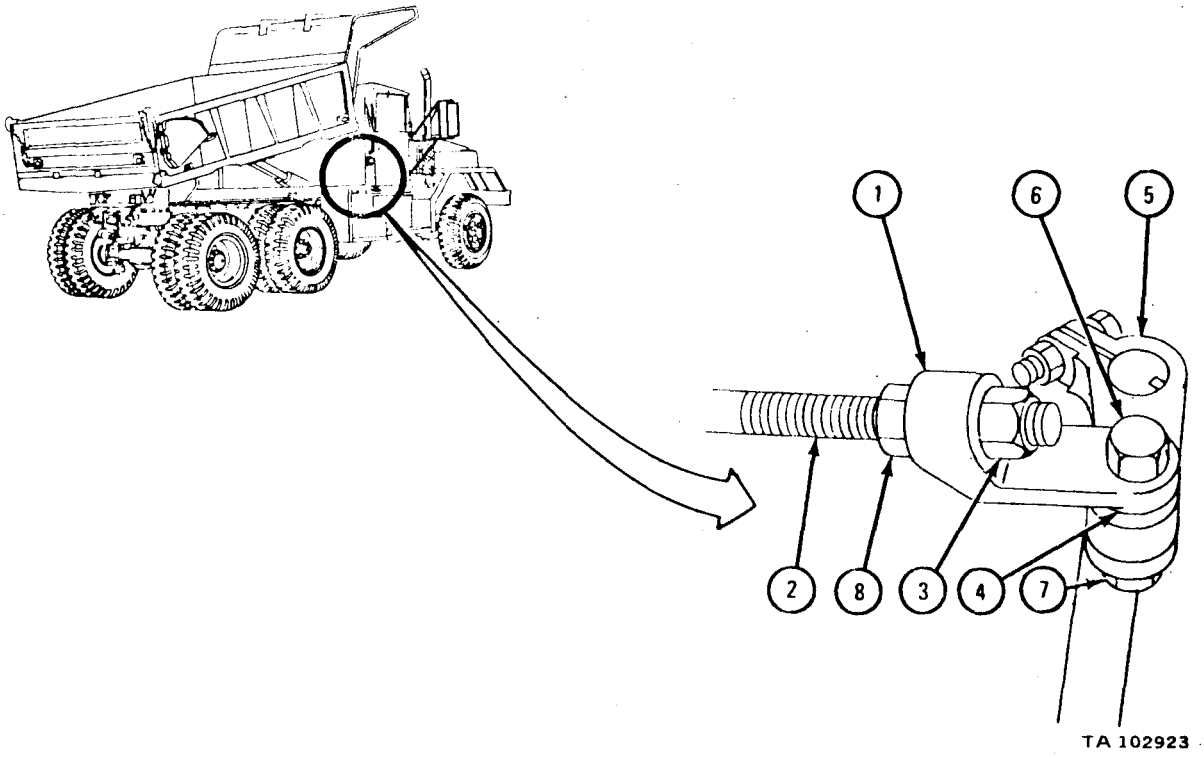

FRAME 8

1. Aline keyway in control arm (1) with woodruff key (2) on cross shaft (3).
2. Lightly tap control arm (1) on cross shaft (3).
3. Tighten capscrew (4) with locknut (5).

GO TO FRAME 9

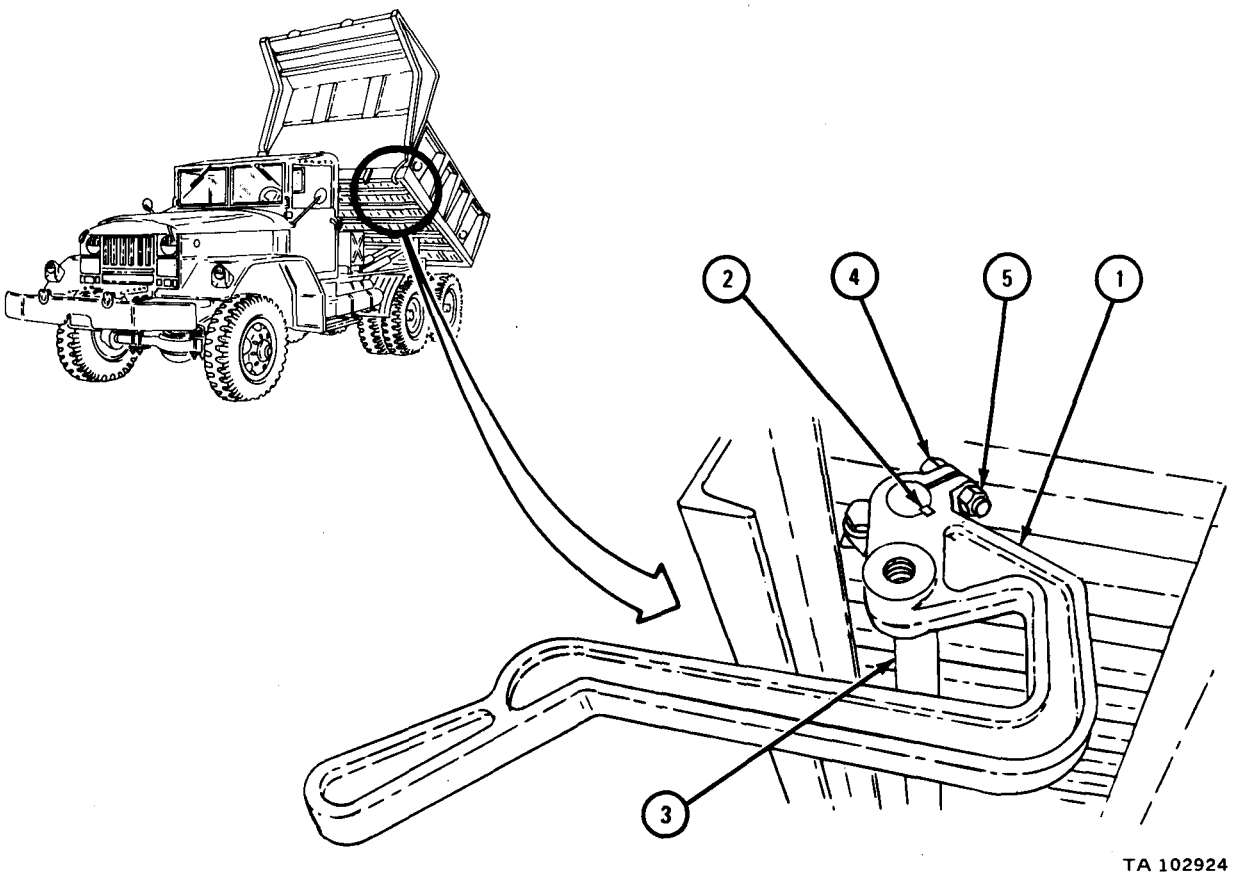

FRAME 9

1. Put clevis (1) on control rod (2). Put on nut (3).
2. Aline holes in clevis (1) with control arm (4) and put washer (5) between clevis and control arm. Put in clevis bolt (6) and nut (7).
3. Tighten clevis bolt (6) and nut (7).

GO TO FRAME 10

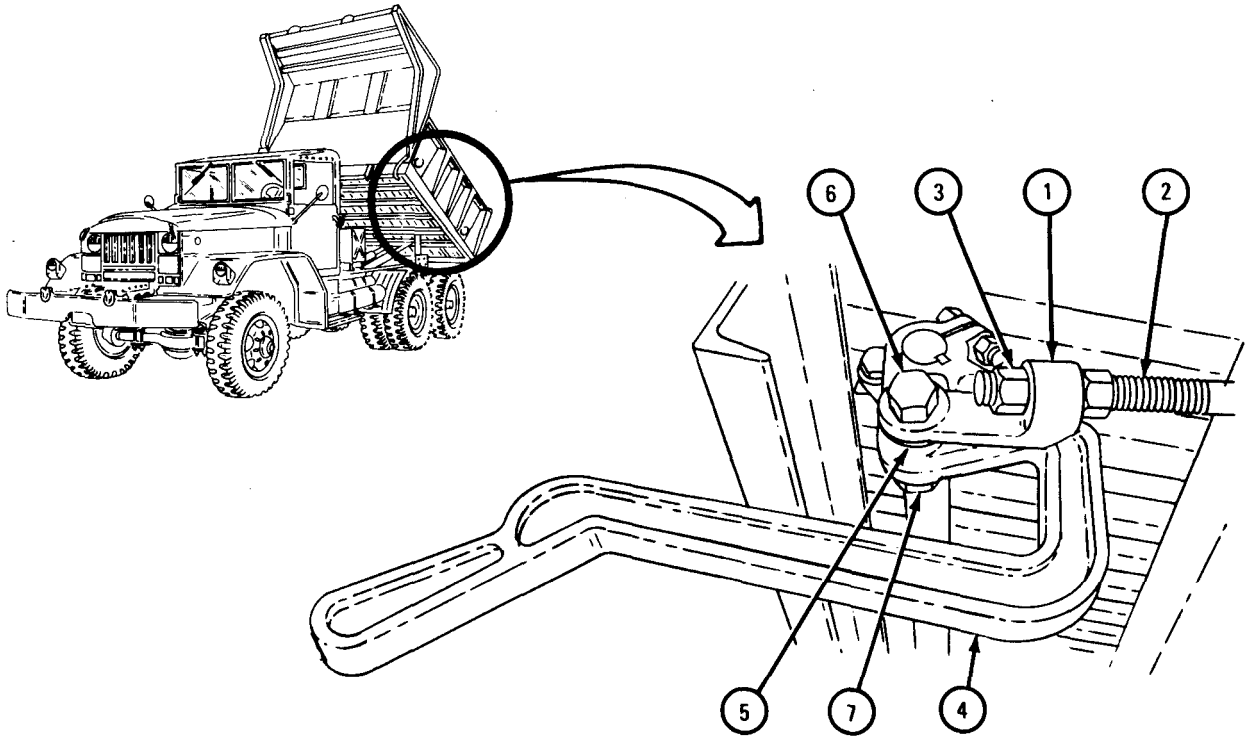

TA 102925

FRAME 10

1. Take out safety braces and lower dump body (1) all the way down. Refer to TM 9-2320-209-20.
2. Push control arm (2) up to lock position.
3. Tighten nut (3) on left control rod (4) until left latch (5) locks tailgate (6) closed.
4. Tighten nut (7).
5. Do steps 3 and 4 again on right control rod (8).
6. Raise dump body (1). Refer to TM 9-2320-209-10. Pull control arm (2) down to open position.
7. Check that both latches (5) release tailgate (6).
8. Lower dump body (1) all the way down. Refer to TM 9-2320-209-10.
9. Push control arm (2) up to lock position and check that both latches (5) lock tailgate (6) closed.

END OF TASK

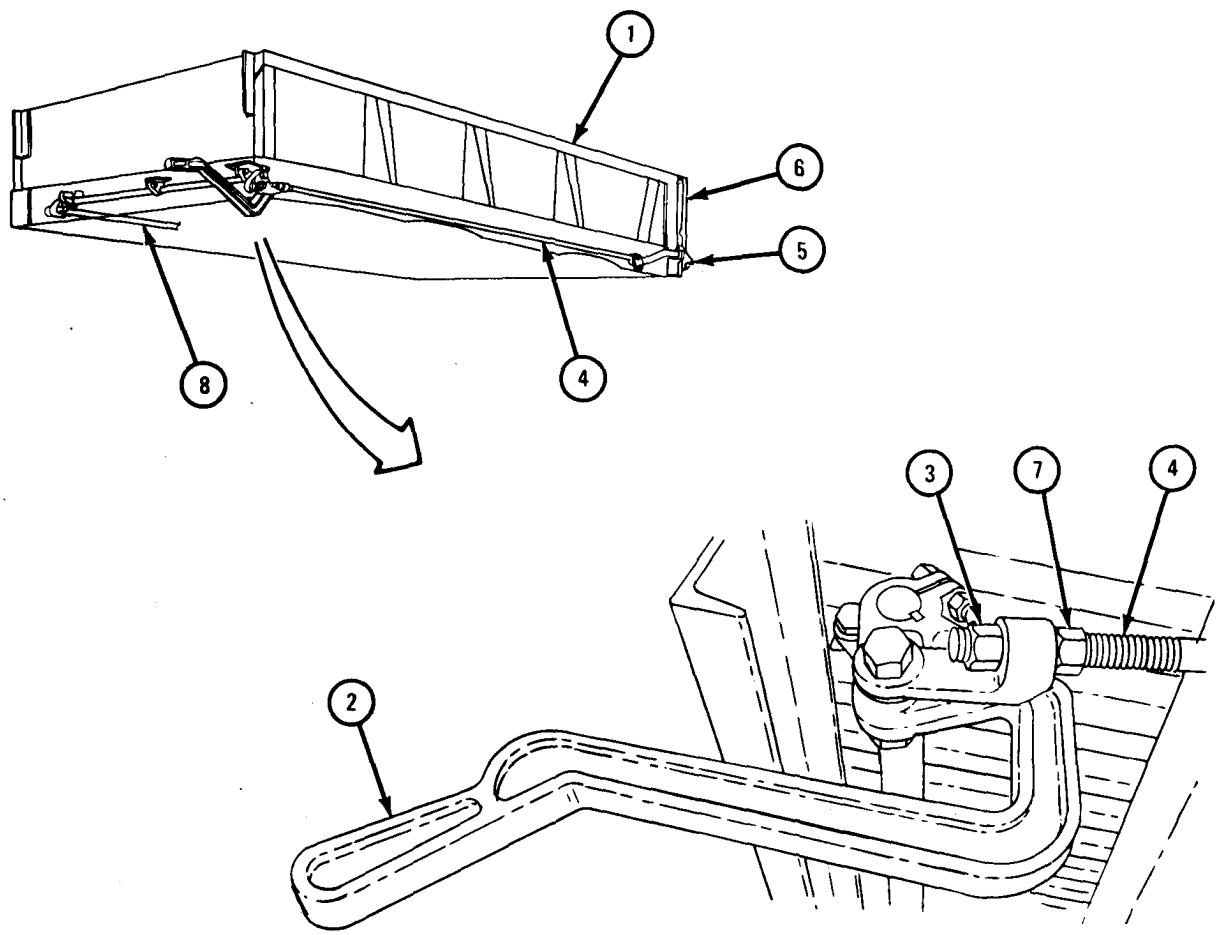

17-68. DUMP TRUCK BODY REMOVAL, REPAIR, AND REPLACEMENT.

TOOLS: No special tools required

SUPPLIES: Solvent, dry cleaning, type II (SD-2), Fed. Spec P-D-680
Clean rags

PERSONNEL: One

EQUIPMENT CONDITION: Truck parked, engine off, handbrake set.

a. Preliminary Procedures.

(1) Remove tailgate. Refer to para 17-66.

(2) Remove taillights and stoplights. Refer to TM 9-2320-209-20.

(3) Raise body and position safety braces. Refer to Dump Body Safety Brace Locking and Unlocking, TM 9-2320-209-20.

b. Removal.

FRAME 1

1. Take out screw (1) and nut (2) from each of two lift pins (3).
2. Take out two lubrication fittings (4) from two lift pins (3).
3. Hook up chain slings to dump body (5) as shown. Join chain slings to hoist and take out slack.
4. Drive out two lift pins (3).
5. Take back pistons (6).
6. Put down safety braces (7).
7. Using hoist, lower dump body (5).

GO TO FRAME 2

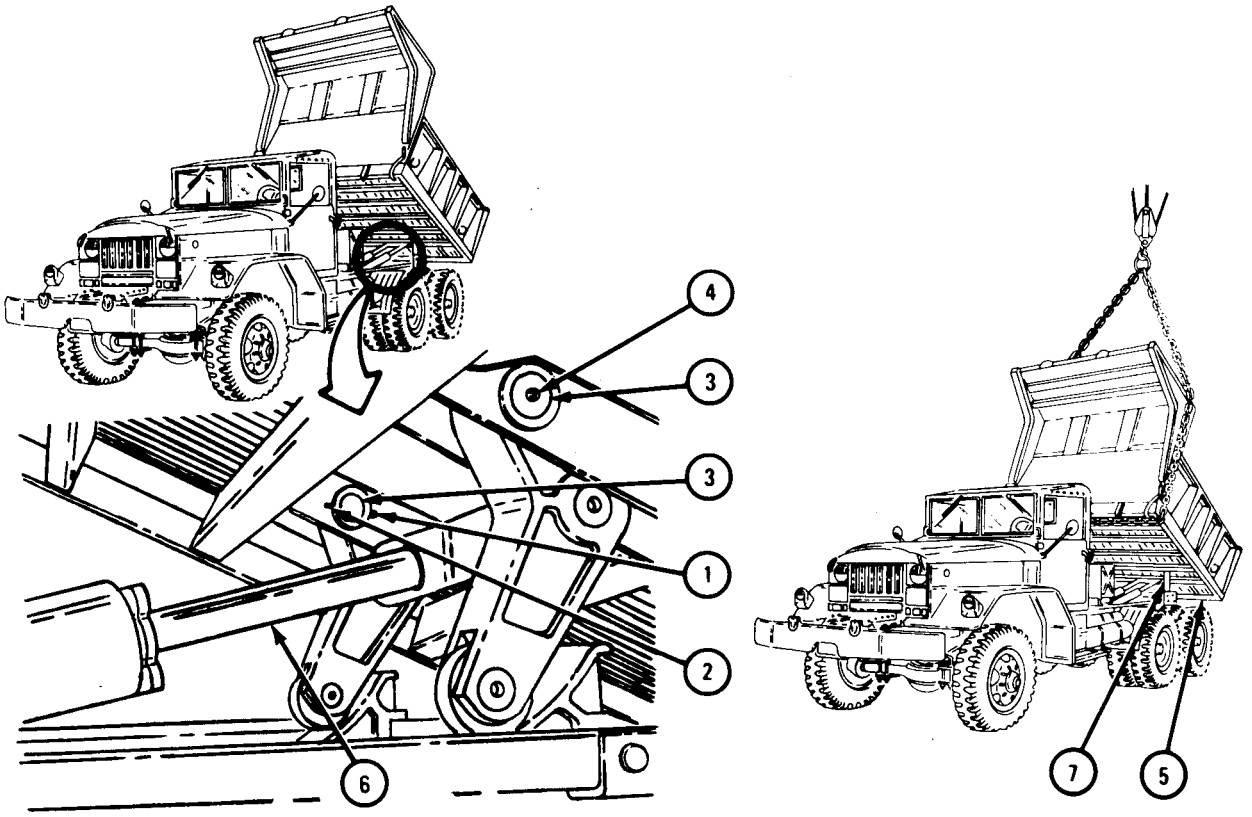

TA 088394

FRAME 2

1. Take out screw (1) and nut (2).
2. Take out lubrication fitting (3).
3. Drive out hinge pin (4) from inside of dump body.
4. Do steps 1, 2, and 3 again on other side of dump body.

GO TO FRAME 3

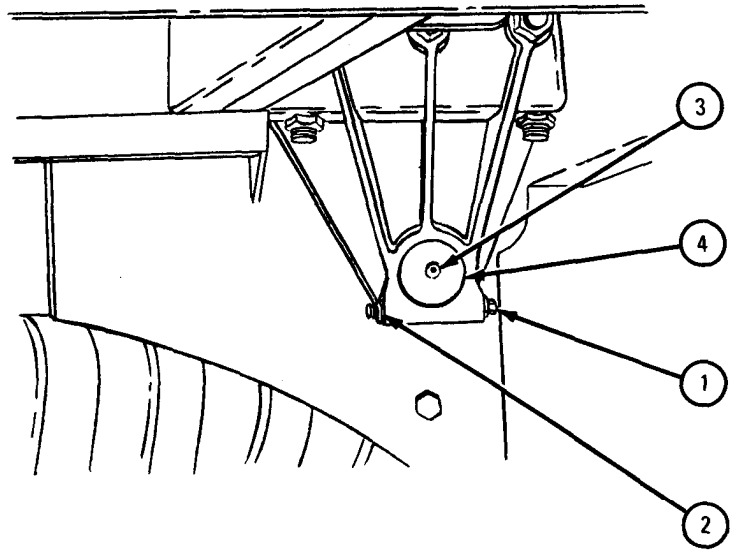

TA 088395

FRAME 3

1. Hook up chain slings to dump body (1) as shown. Join chain slings to hoist. Lift dump body off truck and set it down on wood blocks.

END OF TASK

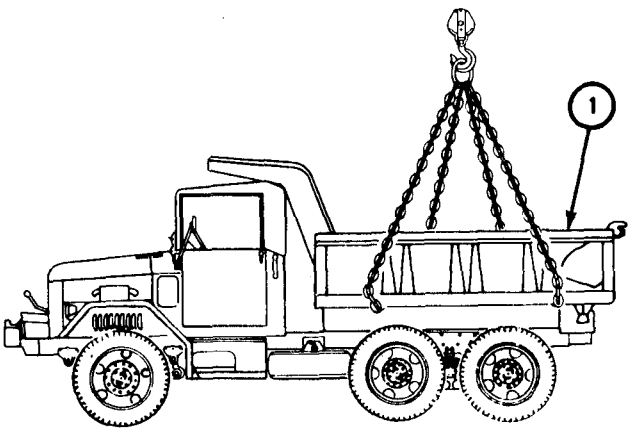

TA 088396

c. Disassembly.

FRAME 1

1. Join chain sling and hoist to cab shield front half (1).
2. Take out two screws (2) and nuts (3).
3. Do step 2 again on other side of cab shield front half (1).

GO TO FRAME 2

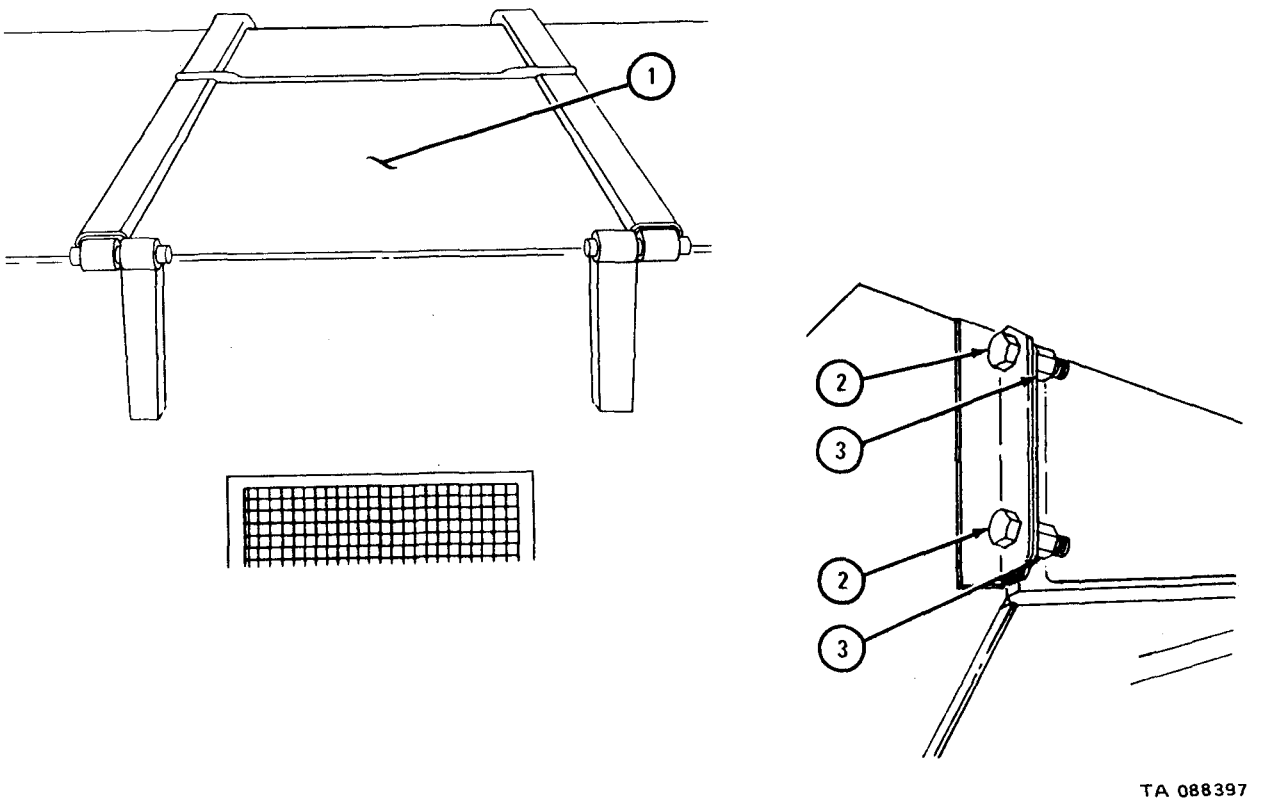

FRAME 2

1. Take out four cotter pins (1), four flatwashers (2), and two hinge pins (3).
2. Lift off cab shield front half (4).

GO TO FRAME 3

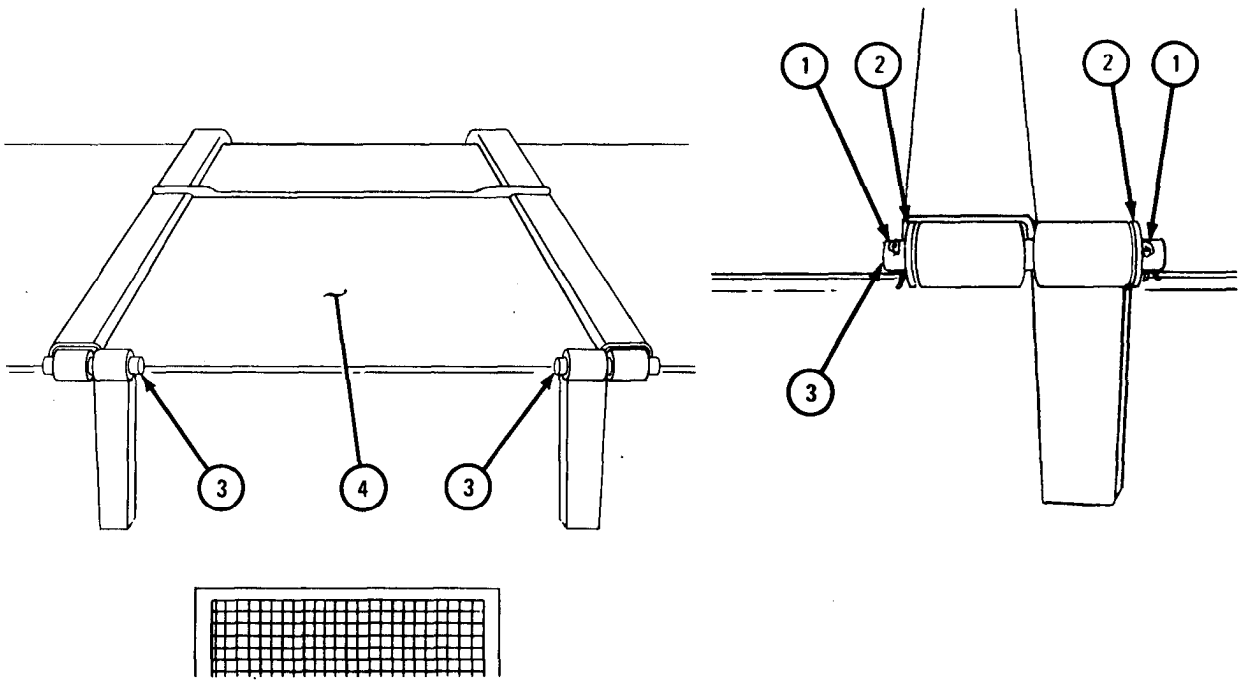

FRAME 3

1. Take out four screws and nuts (1) and take off pioneer bracket (2).

Soldier A 2. Working inside dump body, hold three nuts (3).

Soldier B 3. Take out three screws (4).

4. Take out four screws (5) and nuts (6).

5. Do step 4 again on other side of cab shield lower half (7).

6. Take off cab shield lower half (7).

GO TO FRAME 4

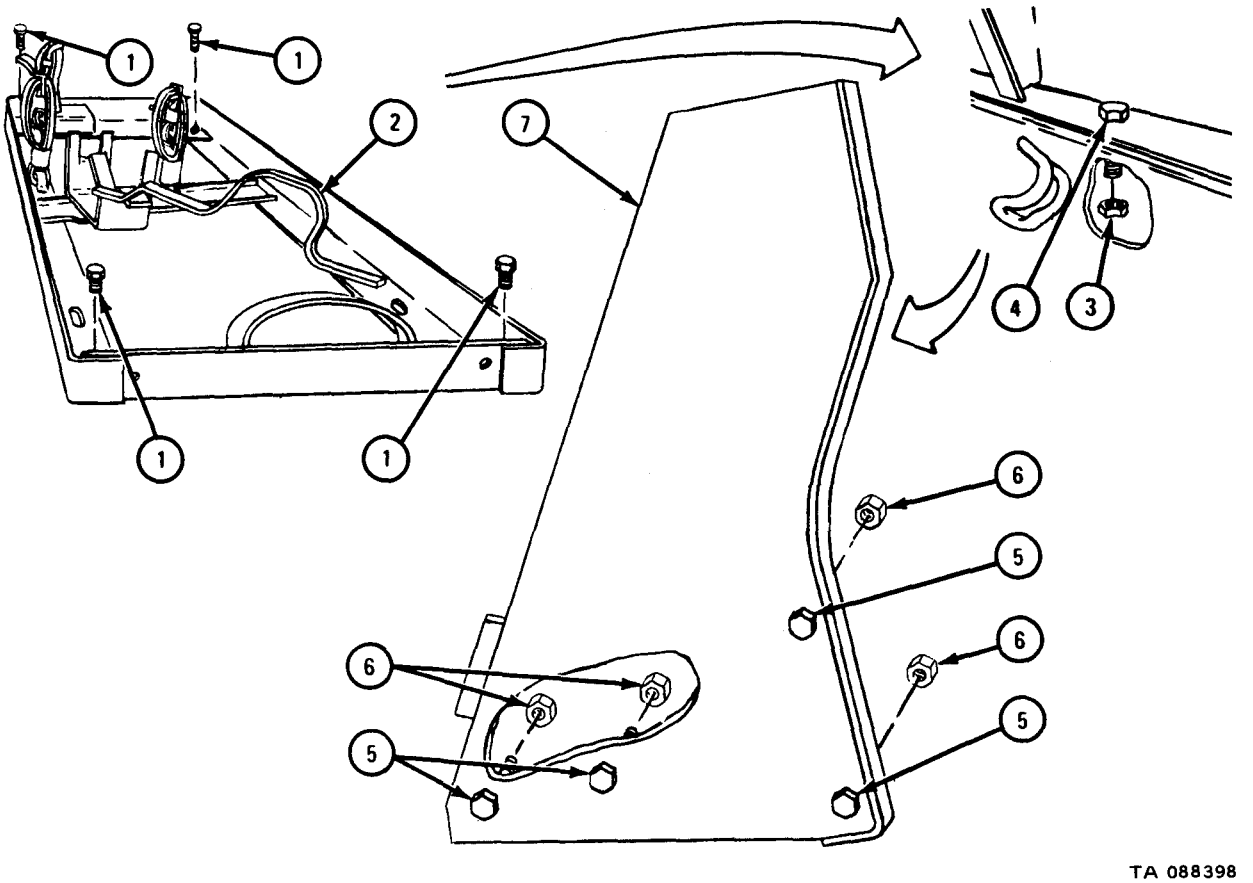

FRAME 4

1. Take out six screws (1) and nuts (2). Take off body hinge (3).
2. Do step 1 again on other side of dump body (4).

GO TO FRAME 5

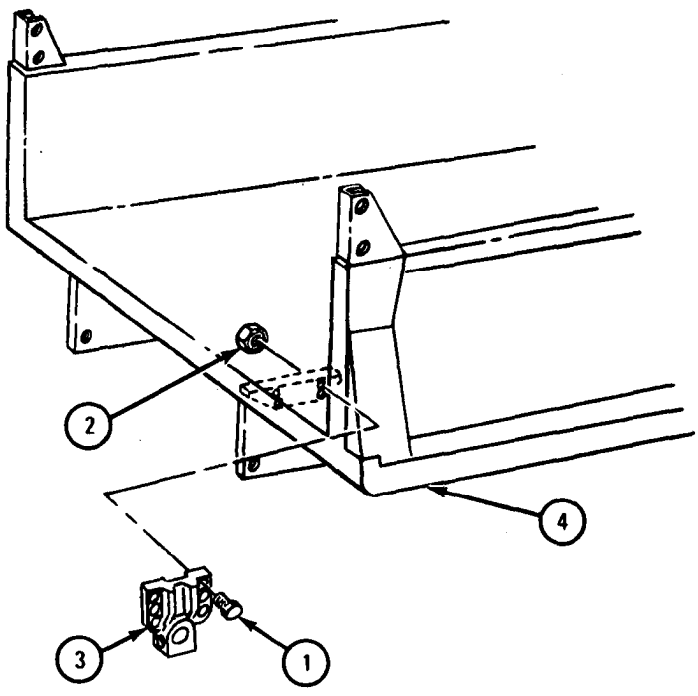

TA 088399

FRAME 5

1. Take out screw (1), washer (2), and nut (3).
2. Take off nut (4), clevis (5), and nut (6).
3. Do steps 1 and 2 again on other side of dump body.

GO TO FRAME 6

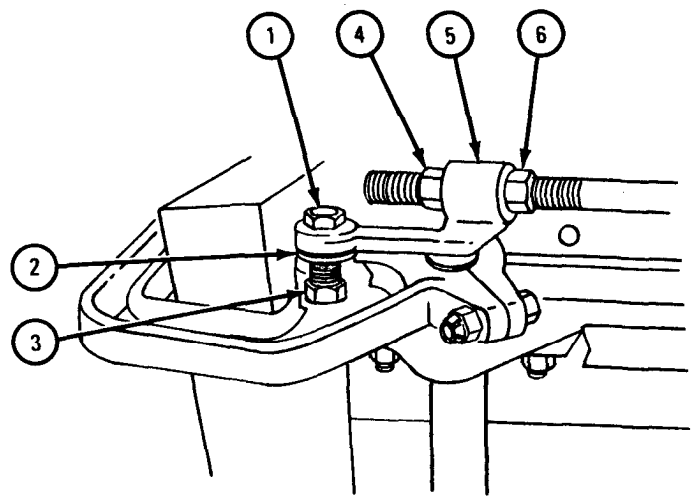

TA 088400

FRAME 6

1. Take out two cotter pins (1).
2. Take off two nuts (2) and take off link bar (3).
3. Take out link assembly (4).
4. Take out rod (5).
5. Do steps 1, 2, 3, and 4 again on other side of dump body.

GO TO FRAME 7

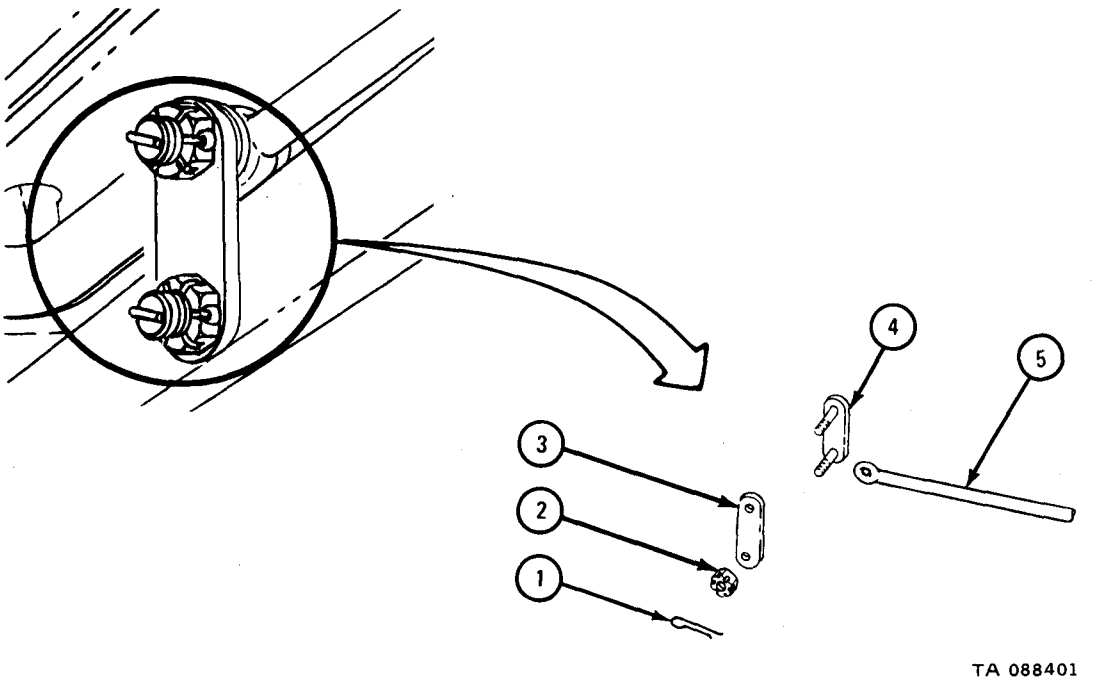

FRAME 7

1. Take out two screws (1) and nuts (2) from cross shaft bearing (3).
2. Do step 1 again for two other cross shaft bearings (3).
3. Take out cross shaft assembly (4).

GO TO FRAME 8

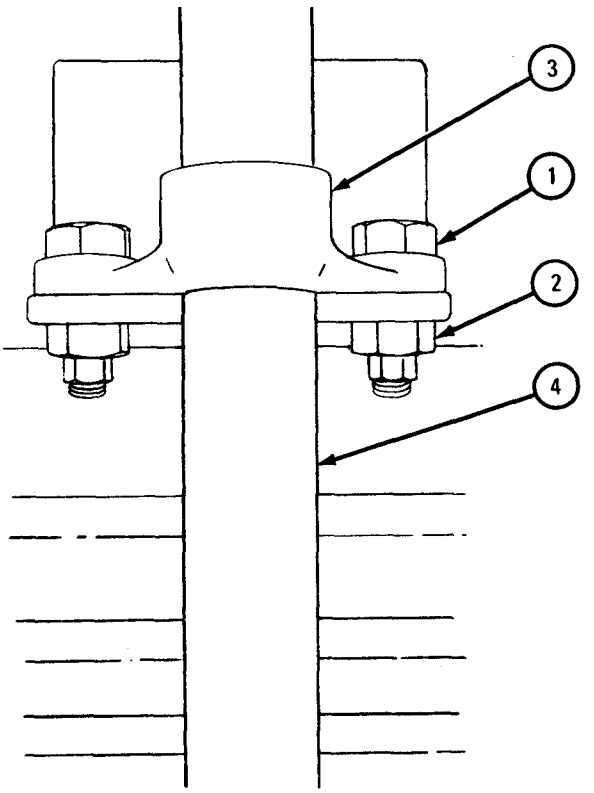

TA 088402

FRAME 8

1. Take out two screws (1) and two self-locking nuts (2).
2. Take out screw (3), flat washer (4), and self-locking nut (5). Take off lower latch assembly (6).
3. Do steps 1 and 2 again on other corner of dump body.

GO TO FRAME 9

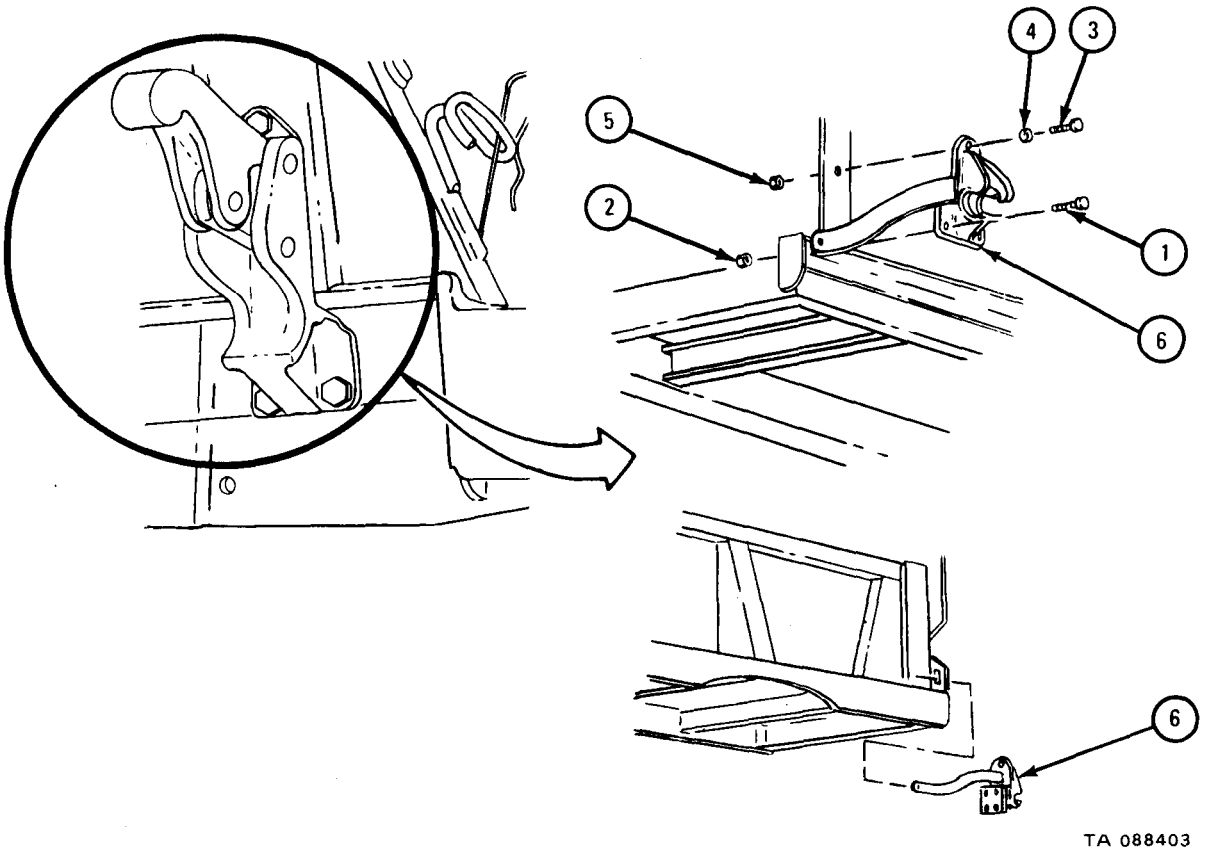

FRAME 9

1. Take out screw (1) and nut (2).
2. Slide off hand lever (3). Take out key (4).
3. Slide off three cross shaft bearings (5).
4. Take out screw (6) and nut (7).
5. Slide off rod lever (8). Take out key (9).

GO TO FRAME 10

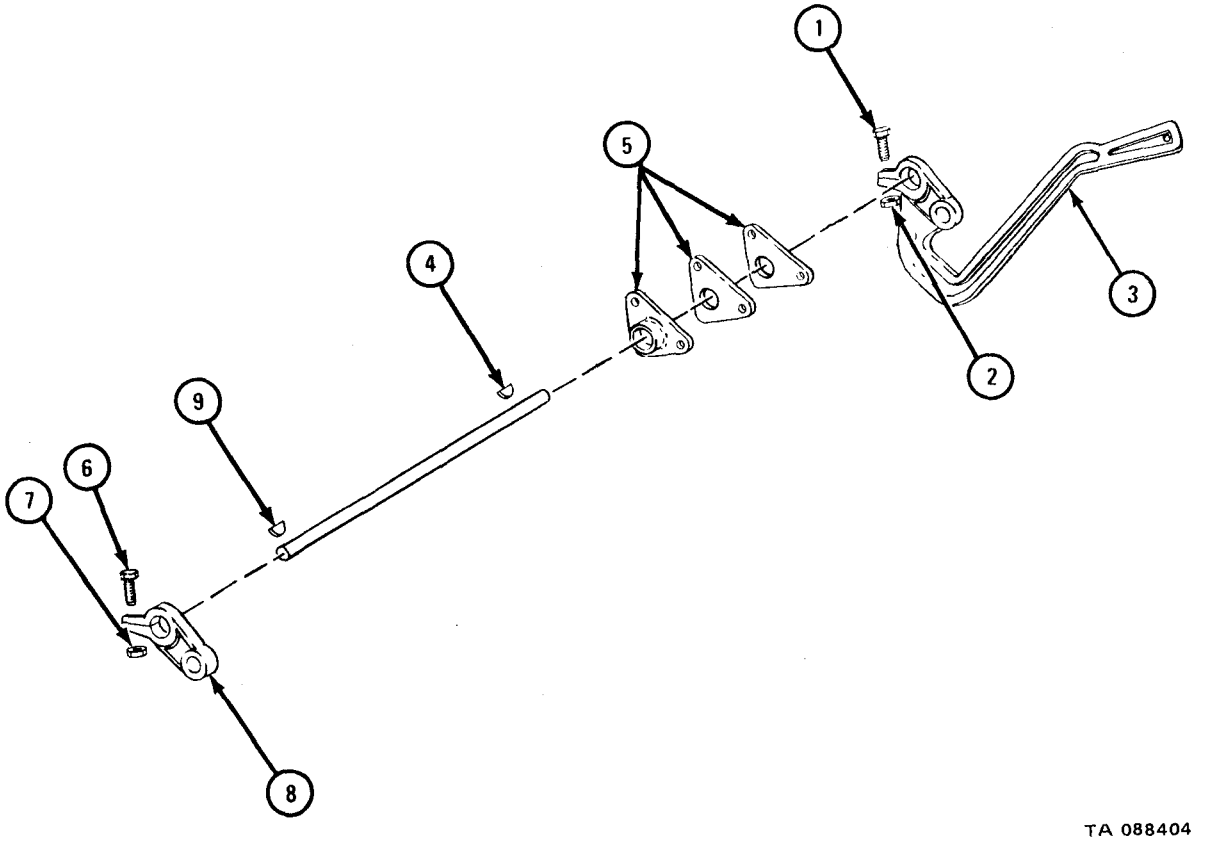

FRAME 10

1. Drive out pin (1).
2. Take latch (2) and control rod (3) off latch body (4).
3. Take out pin (5).
4. Do steps 1, 2, and 3 again for other latch assembly.

END OF TASK

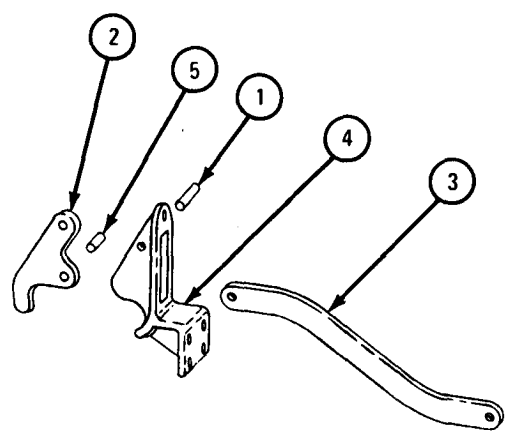

TA 088405

WARNING

Dry cleaning solvent is flammable. Do not use near an open flame. Keep a fire extinguisher nearby when solvent is used. Use only in well-ventilated places. Failure to do this may result in injury to personnel and damage to equipment.

d. Cleaning.

(1) Steam clean dump body.

(2) Clean small parts in dry cleaning solvent.

(3) Dry with clean rags.

e. **Inspection and Repair.**

FRAME 1

1. Check that pioneer tool kit bracket (1) has no bends, dents, cracks or broken welds. Repair by straightening or welding. Refer to TM 9-237. If more repair is needed, get a new bracket.
2. Check that cab shield upper half (2), lower half (3), and body (4) have no bends, dents, cracks or broken welds. Repair by straightening or welding. Refer to TM 9-237. If more repair is needed, get new parts.
3. Check that body hinges (5 and 6) and hinge pins (7) have no bends, dents or cracks. Repair by welding or straightening. Refer to TM 9-237. If more repair is needed, get new parts.
4. Clean straightened and welded areas with wire brush and emery cloth or sandpaper and paint with proper paint. Refer to TM 43-0139.

GO TO FRAME 2

FRAME 2

1. Check that lower latches (1), lower latch bodies (2), lower latch control bars (3), rod link bars (4), lever clevises (5), hand lever (6), cross shaft bearings (7), rod lever (8), and cross shaft (9) have no cracks or bends. Repair by straightening or welding. Refer to TM 9-237. If more repair is needed, get new parts.
2. Clean welded and straightened areas with wire brush and emery cloth or sandpaper and paint with proper paint. Refer to TM 43-0139.

GO TO FRAME 3

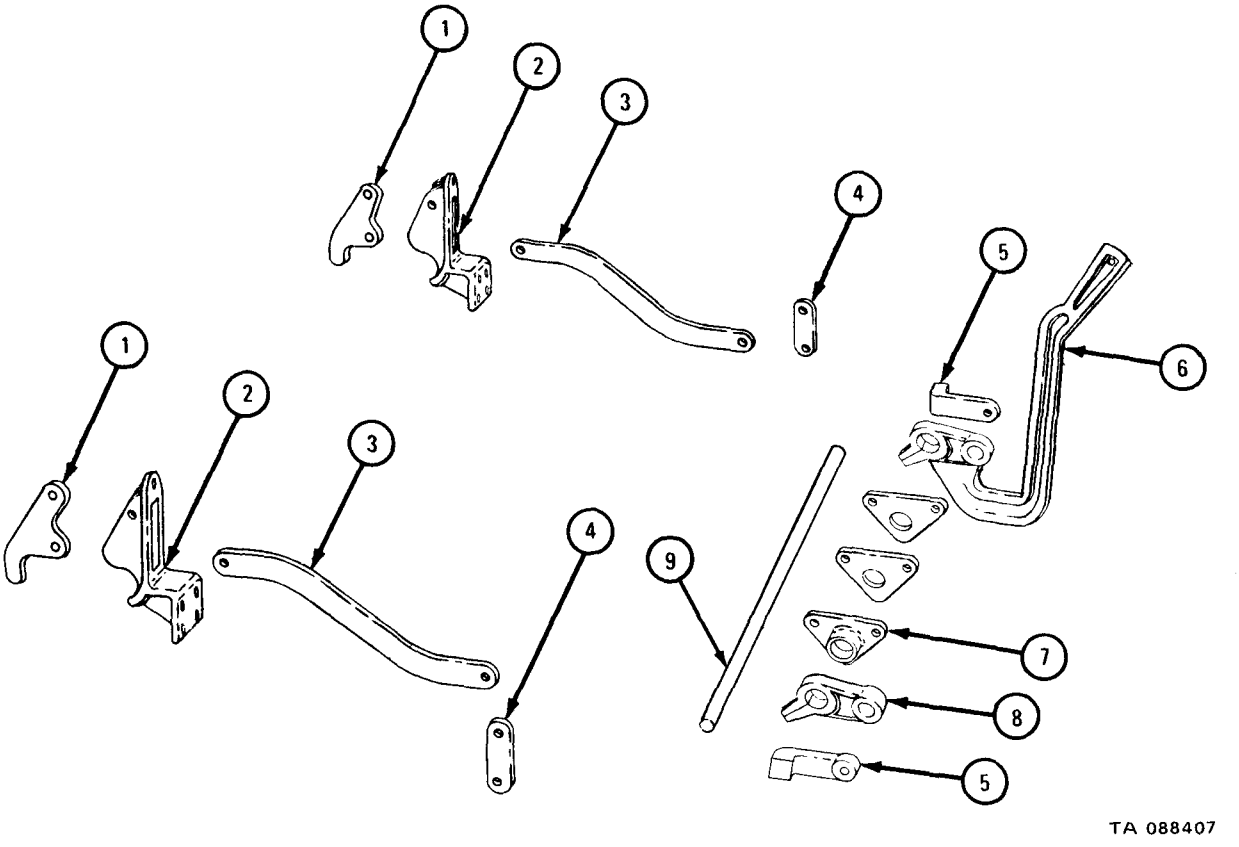

FRAME 3

1. Check that woodruff keys (1 and 2) have no burrs or nicks. Repair with a fine mill file.
2. Check that control rods (3) and rod links (4) have no bends, cracks, stripped or damaged threads. Repair bends or cracks by straightening or welding. Refer to TM 9-237. Repair damaged threads with thread chaser.
3. If more repair is needed, get new parts.
4. Clean welded or straightened areas with wire brush and emery cloth or sandpaper and paint with proper paint. Refer to TM 43-0139.

END OF TASK

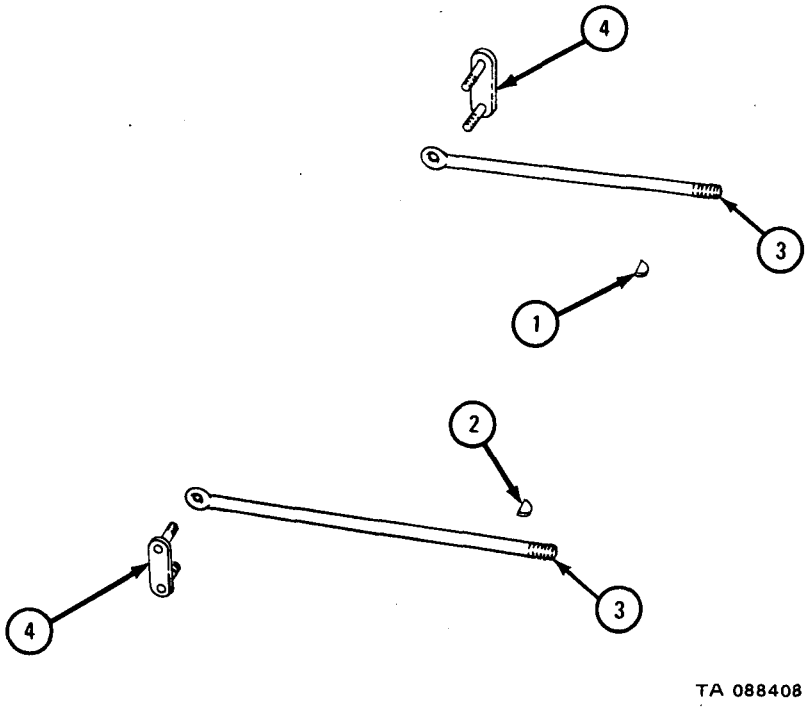

f. Assembly.

FRAME 1

1. Put latch (1) on control rod (2) and put in pin (3).
2. Put latch (1) and control rod (2) in place on latch body (4).
3. Put in pin (5).

GO TO FRAME 2

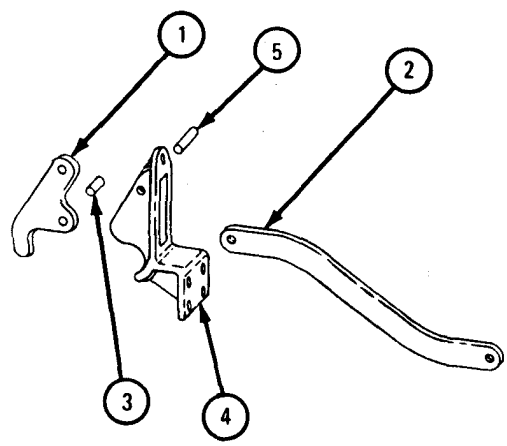

TA 088409

FRAME 2

1. Put key (1) in place on cross shaft (2) and slide on rod lever (3).
2. Put in screw (4) and nut (5).

GO TO FRAME 3

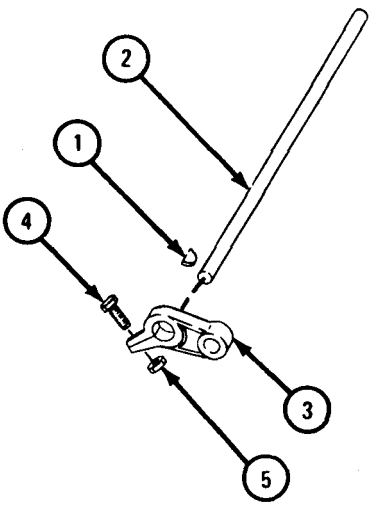

TA 088410

FRAME 3

1. Put end cross shaft bearings (1 and 2) on cross shaft (3) with flat side of bearing facing center of cross shaft.
2. Put center cross shaft bearing (4) on cross shaft (3) with flat side of bearing facing bearing (1).
3. Put key (5) in place on cross shaft (3) and slide on hand lever (6).
4. Put in screw (7) and nut (8).

GO TO FRAME 4

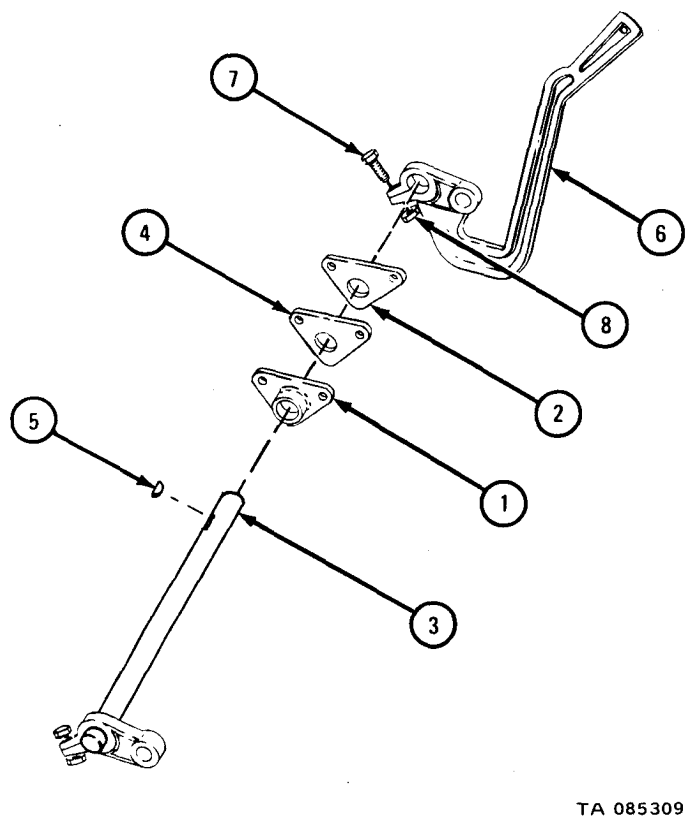

FRAME 4

1. Put lower latch assembly (1) in place and put in two screws (2) and nuts (3).
2. Put in screw (4), flat washer (5), and nut (6).
3. Do steps 1 and 2 again on other corner of dump body.

GO TO FRAME 5

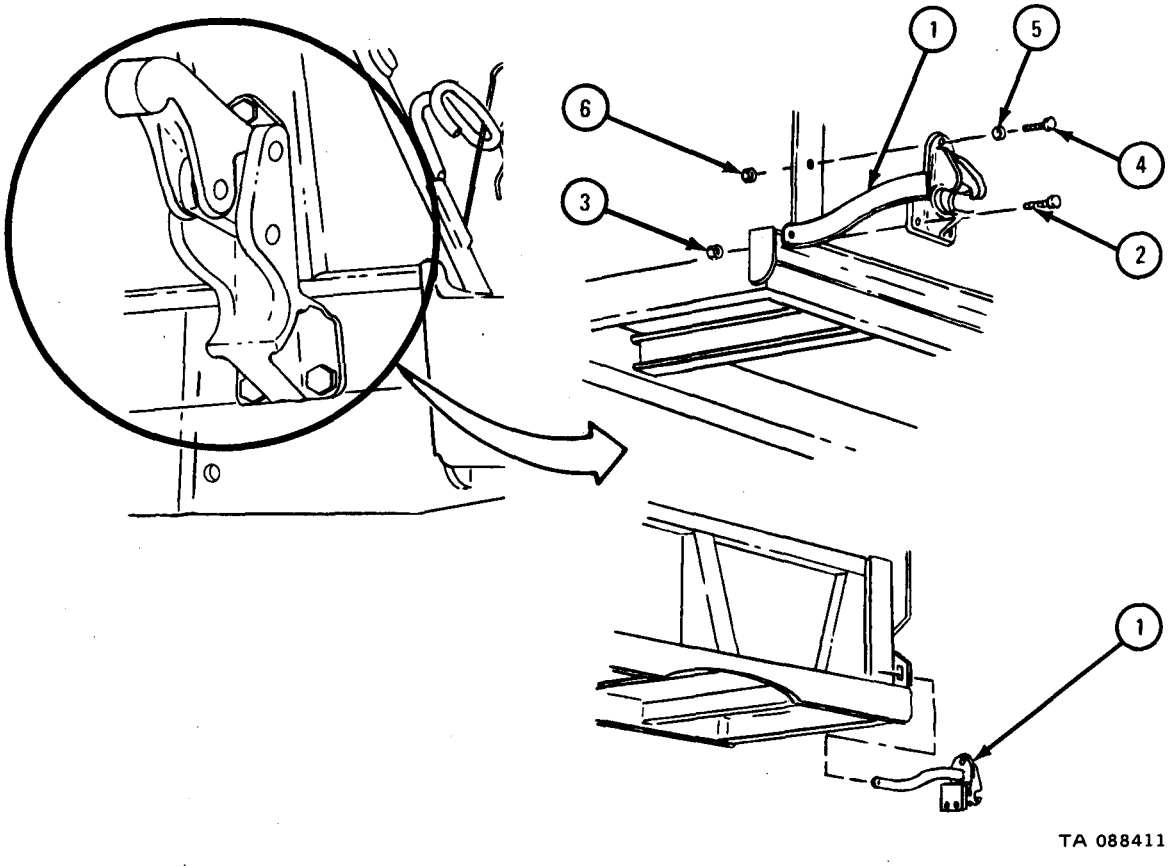

FRAME 5

1. Put cross shaft assembly (1) in place with flat side of cross shaft bearing (2) against mounting bracket (3).
2. Put in two screws (4) and nuts (5) in cross shaft bearing (2).
3. Do step 2 again for two other cross shaft bearings (2).

GO TO FRAME 6

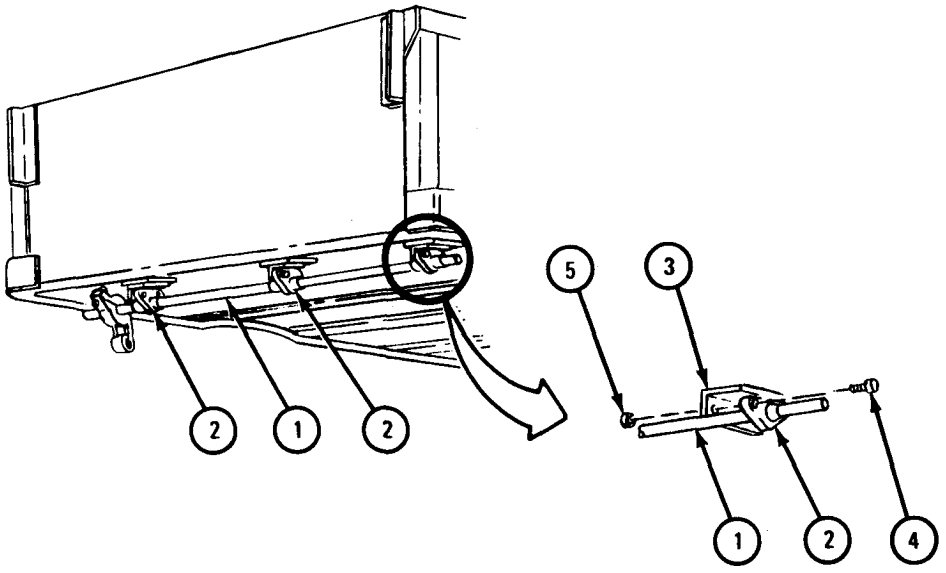

TA 088412

FRAME 6

1. Put control rod (1) in place.
2. Put in link assembly (2).
3. Put on link bar (3) and put on two nuts (4).
4. Put in two cotter pins (5).

GO TO FRAME 7

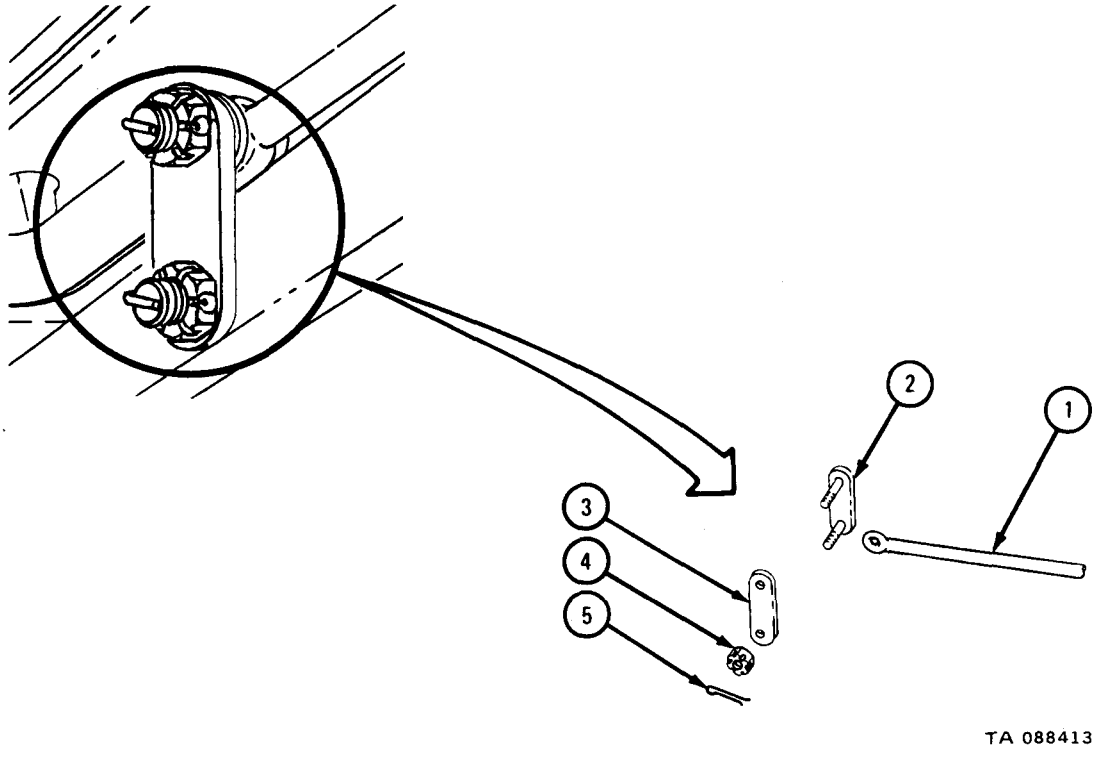

FRAME 7

1. Put on nut (1), clevis (2), and nut (3).
2. Put in screw (4), washer (5), and nut (6).
3. Do steps1 and 2 again on other side of dump body.

GO TO FRAME 8

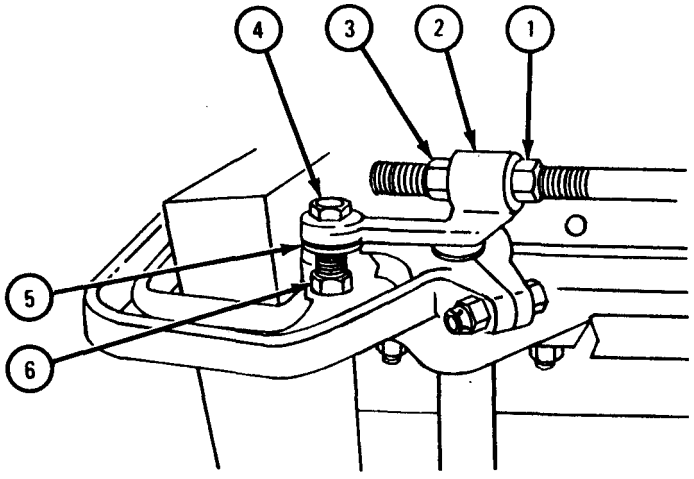

TA 088414

FRAME 8

1. Put body hinge (1) in place. Put in six screws (2) and nuts (3).
2. Do step 1 again on other side of dump body (4).

GO TO FRAME 9

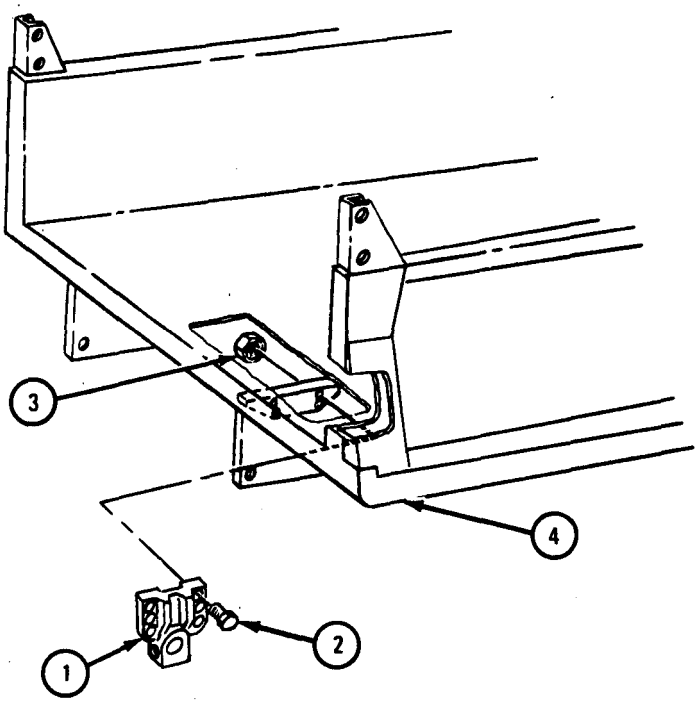

TA 088415

FRAME 9

1. Put pioneer bracket (1) in place on dump body (2) and put in four screws and nuts (3).
2. Using hoist, put cab shield lower half (4) in place.
3. Put in four screws (5) and nuts (6).

Soldier A 4. Put in three screws (7).

Soldier B 5. Working inside dump body (2), put on three nuts (8).

GO TO FRAME 10

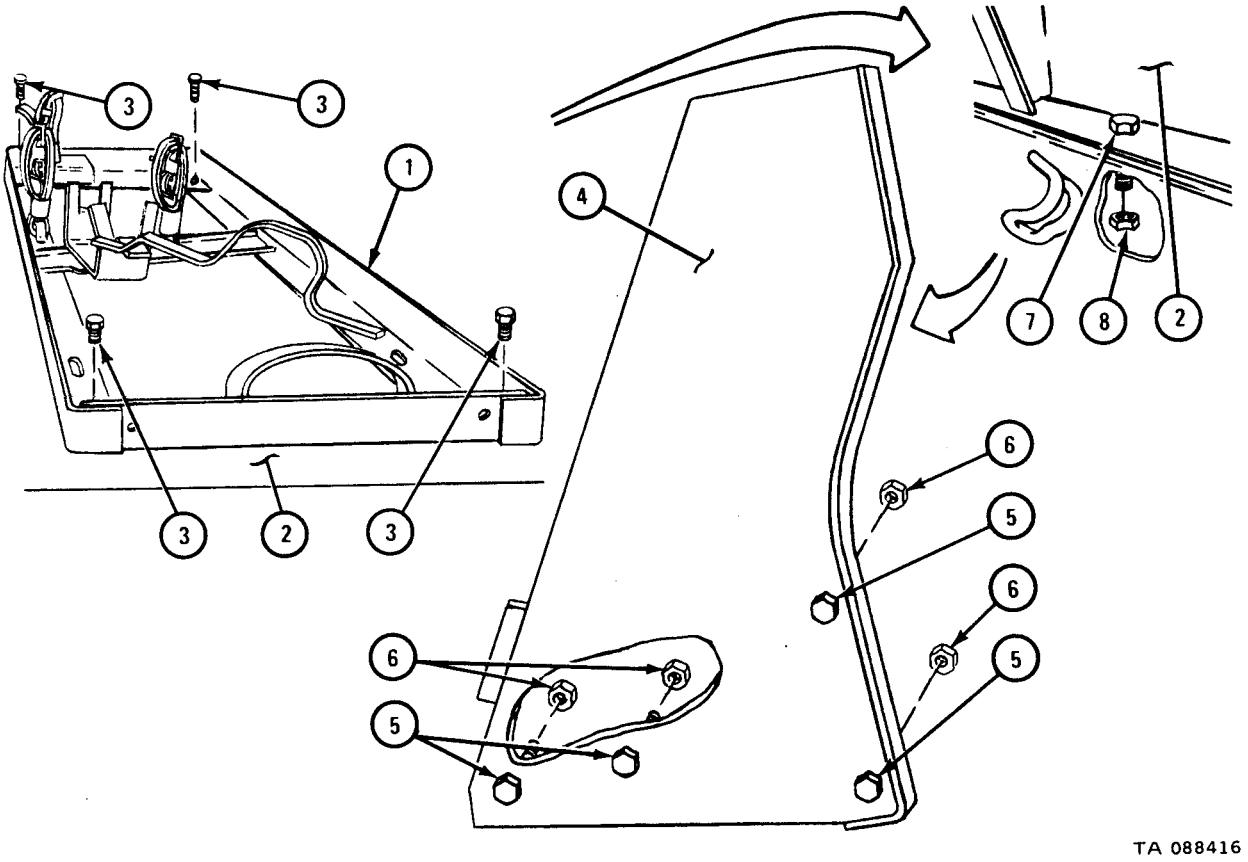

FRAME 10

1. Join hoist to cab shield front half (1). Lift cab shield front half into place.
2. Put in two hinge pins (2), four flat washers (3), and four cotter pins (4).

GO TO FRAME 11

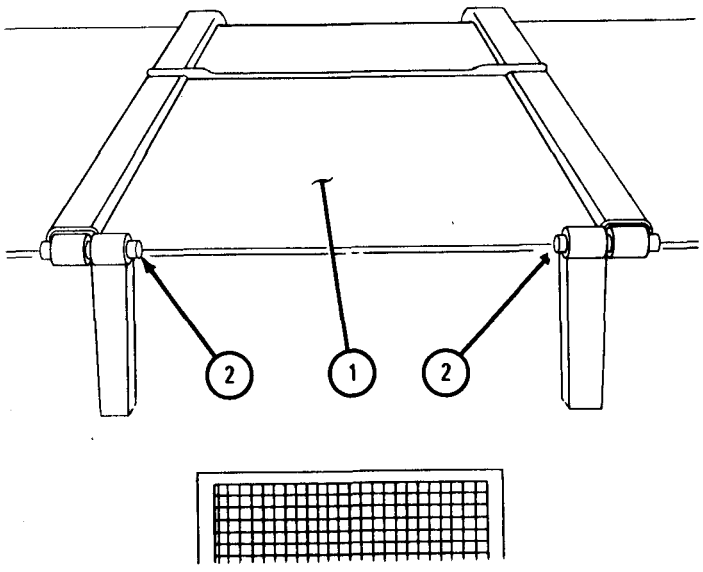

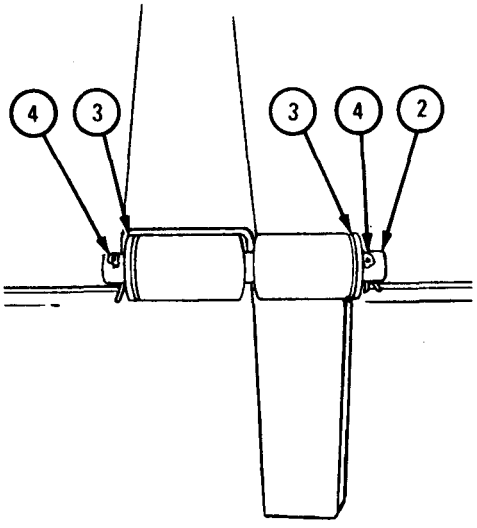

TA 088417

FRAME 11

1. Put in two screws (1) and nuts (2).
2. Do step 1 again on other side of cab shield front half (3).

END OF TASK

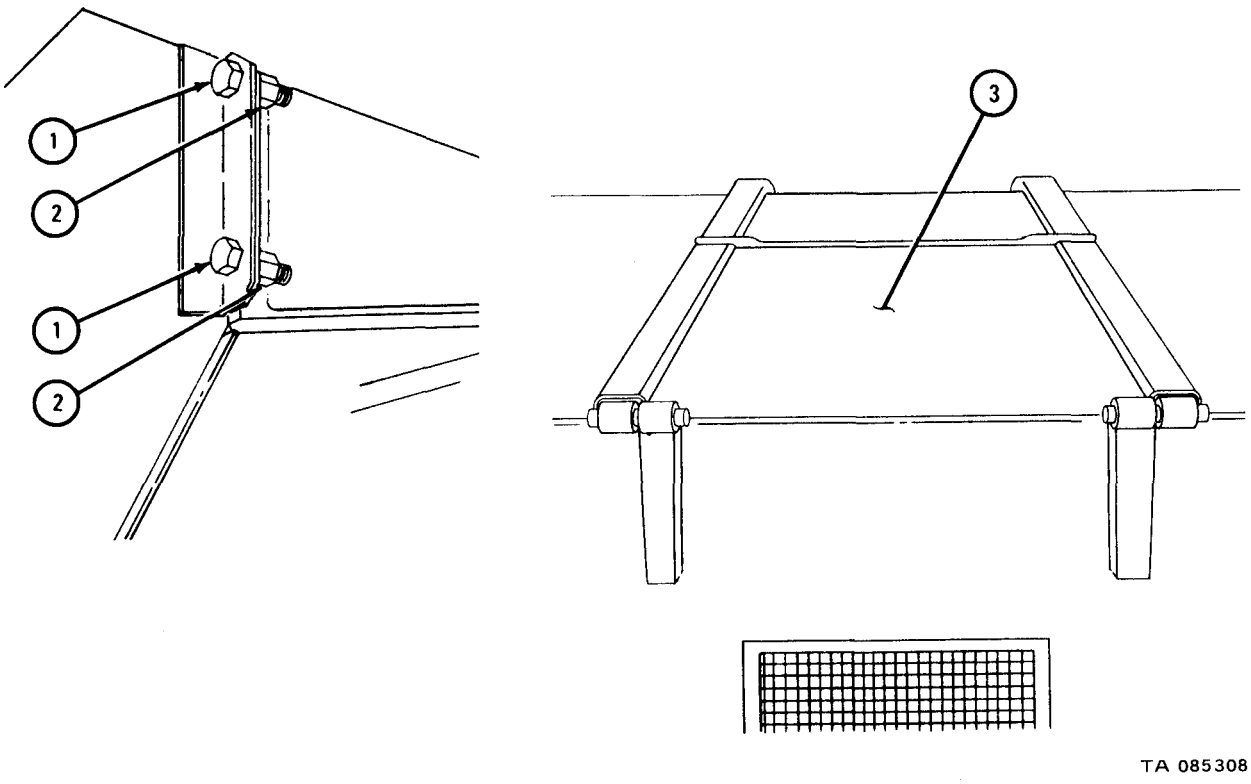

g. Replacement.

FRAME 1

1. Hook up chain sling (1) to dump body (2) as shown. Join chain slings to hoist. Lift dump body into place on truck.
2. Unhook chain slings (1).

GO TO FRAME 2

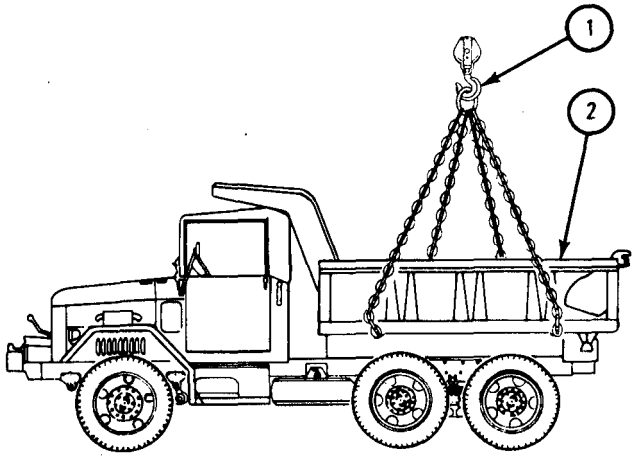

TA 088418

FRAME 2

1. Drive in hinge pin (1) from inside.
2. Put in lubrication fitting (2).
3. Put in screw (3) and nut (4).
4. Do steps 1, 2, and 3 again on other side of dump body.

GO TO FRAME 3

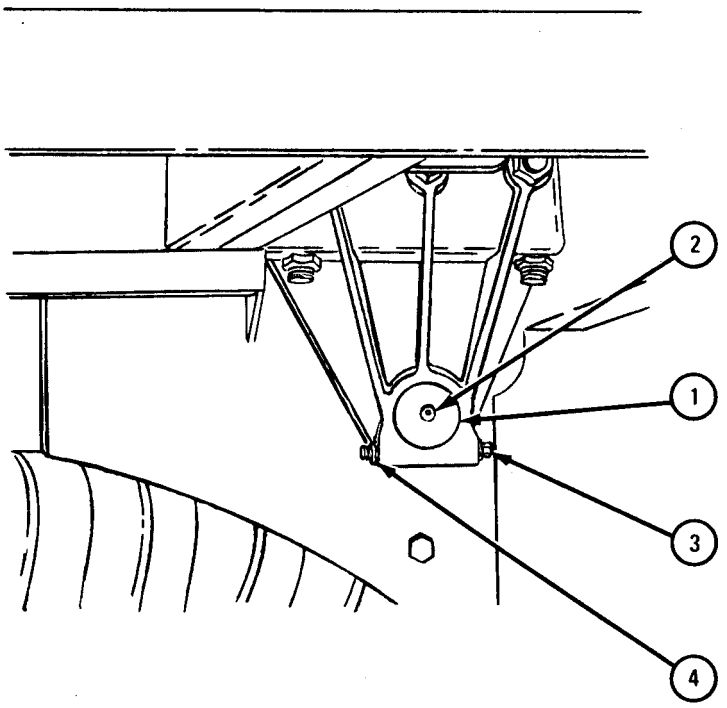

FRAME 3

1. Join chain slings to dump body (1) as shown. Join chain slings to hoist. Raise dump body and position safety braces. Refer to TM 9-2320-209-20.
2. Aline holes in crosshead roller arms (2) with holes for lift pins (3) under dump body (1).
3. Drive in two lift pins (3). Put in two lubrication fittings (4).
4. Put in two screws (5) and nuts (6).
5. Raise dump body (1) to take weight off safety braces (7). Lower safety braces.
6. Using hoist, lower dump body (1). Take away hoist and chain slings.

NOTE

Follow-on Maintenance Action Required:

1. Replace taillights and stoplights. Refer to TM 9-2320-209-20.
2. Replace tailgate. Refer to para 17-66.
3. Adjust tailgate linkage. Refer to para 17-68h.

END OF TASK

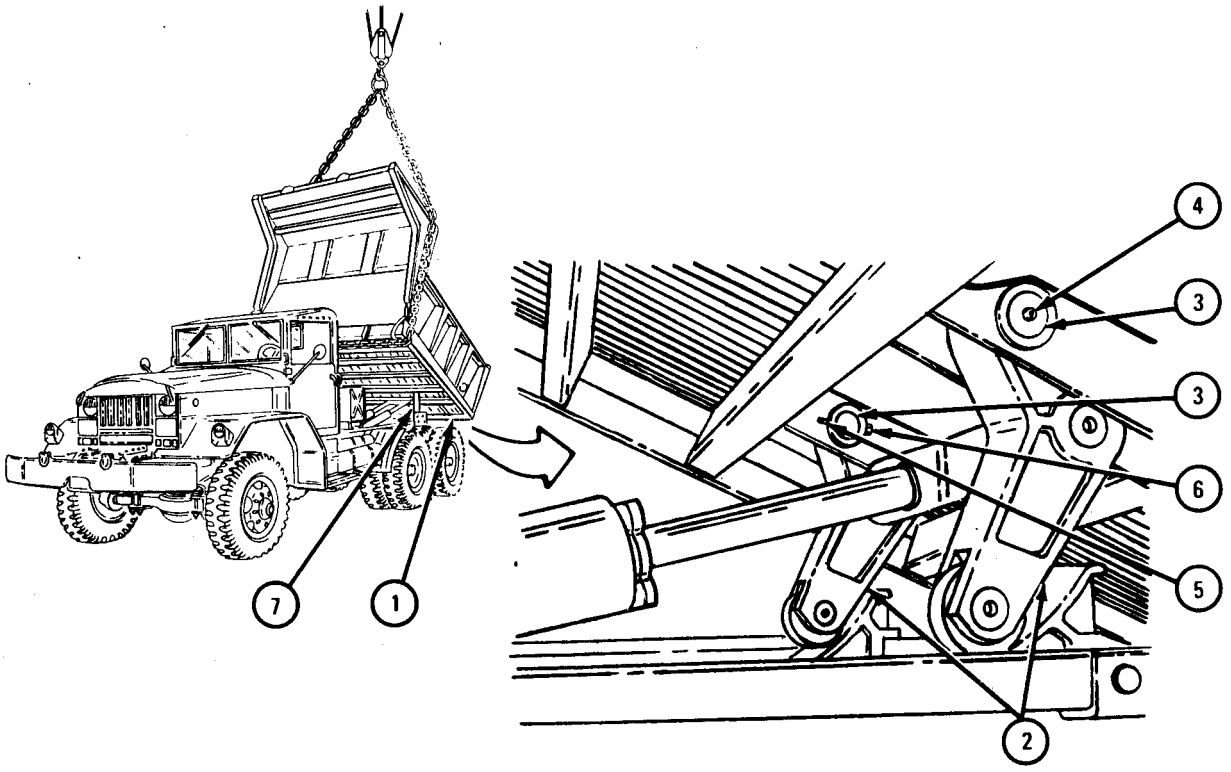

h. Tailgate Linkage Adjustment.

FRAME 1

1. Put hand lever (1) in locked position. Check that two locking latches (2) close fully over two tailgate pivot pins (3). If locking latches are fully closed, END OF TASK.
2. If locking latches (2) did not fully close, loosen two nuts (4), one on each side of dump body, two turns. Hold nuts and tighten two nuts (5).
3. Do step 1 again. If needed, do steps 1 and 2 again until locking latches (2) fully close.

END OF TASK

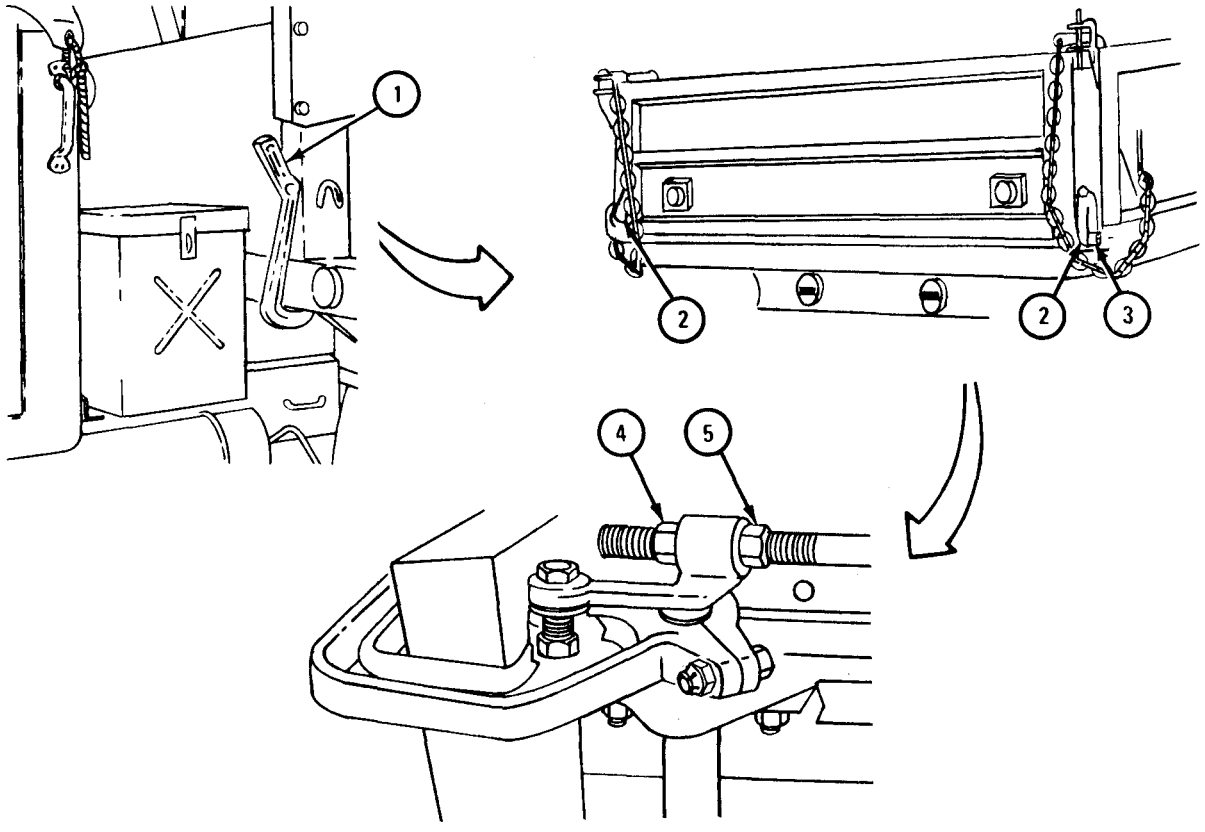

TA 088421

17-69. SPLASH SHIELD REMOVAL, REPAIR, AND REPLACEMENT.

TOOLS: No special tools required

SUPPLIES : Solvent, dry cleaning, type II (SD-2) Fed. Spec P-D-680

PERSONNEL: One

EQUIPMENT CONDITION: Truck parked, engine off, handbrake set.

a. Removal.

(1) Model M275A1 and M275A2.

FRAME 1

NOTE

Models M275A1 and M275A2 have front splash shields only. This task is for the left splash shield. The task for the right splash shield is the same.

1. Take out three capscrews (1) and nuts (2).
2. Take out four capscrews (3) and nuts (4). Take off splash shield (5).

END OF TASK

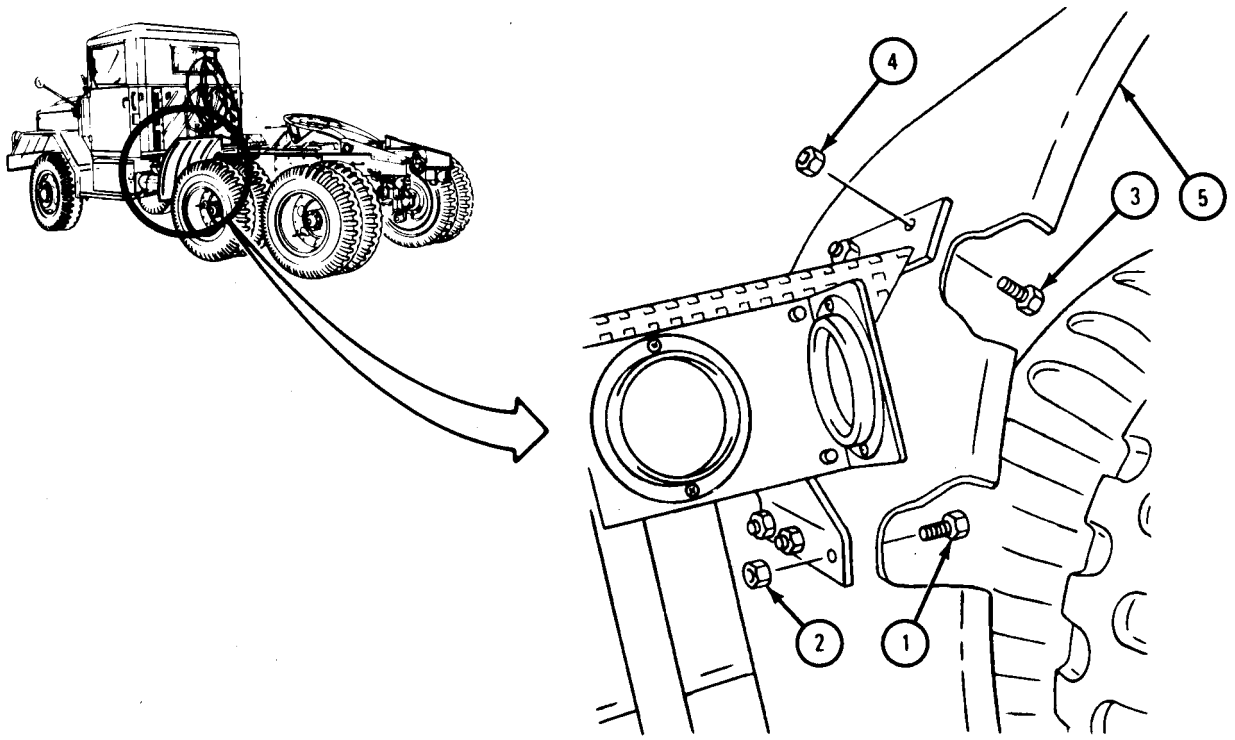

(2) Model M342A2.

FRAME 1

NOTE

This task shows the right front splash shield. The task is the same for the left front splash shield.

1. Take out two capscrews (1) and nuts (2).
2. Take out four capscrews (3) and nuts (4). Take off splash shield (5).

GO TO FRAME 2

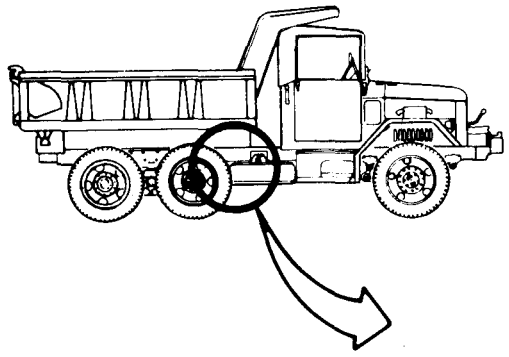

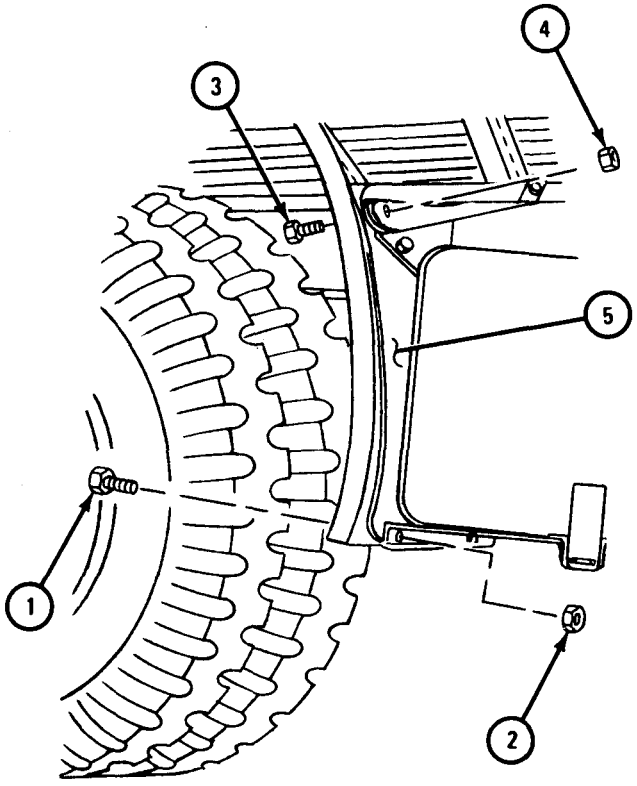

TA 104892

FRAME 2

NOTE

This task shows the left rear splash shield. The task is the same for the right rear splash shield.

1. Take out five capscrews (1) and nuts (2). Take off lower shield (3).
2. Take out five capscrews (4) and nuts (5). Take off upper shield (6).

END OF TASK

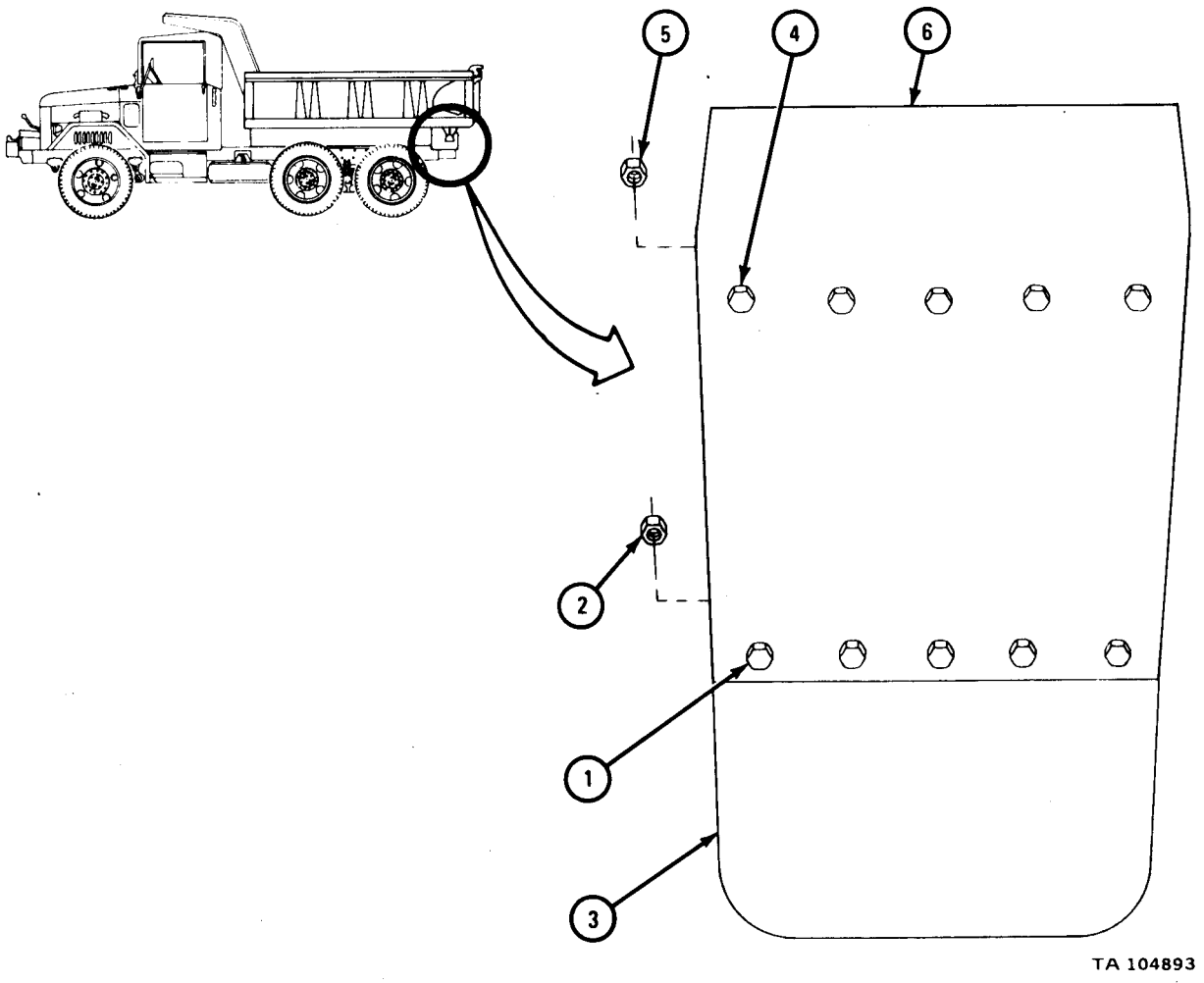

(3) Model M756A2.

FRAME 1

1. Take out capscrew (1) and nut (2).
2. Takeout two capscrews (3) and nuts (4). Take off front splash shield (5).

GO TO FRAME 2

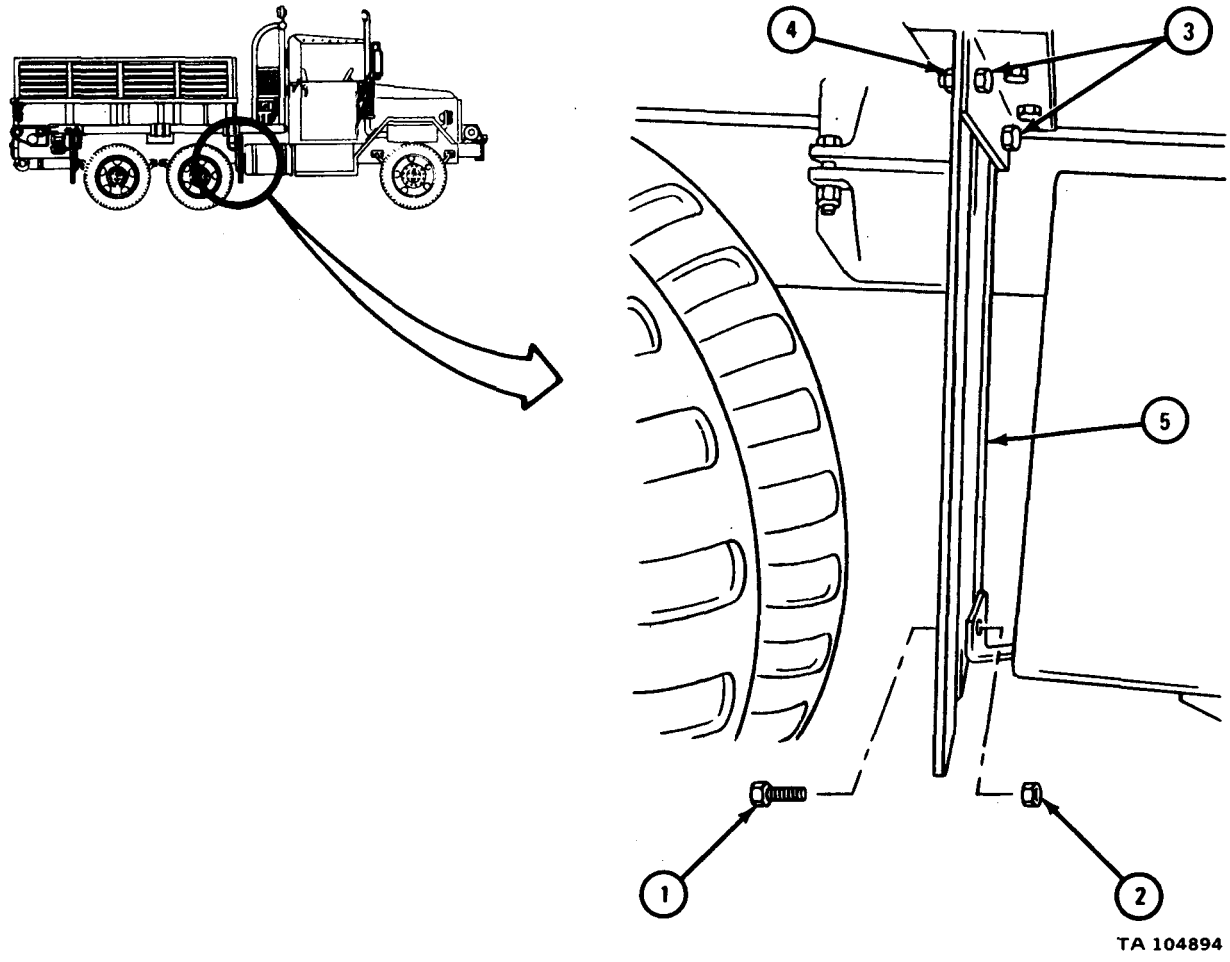

FRAME 2

NOTE

This task is for the right rear splash shield. The task for the left rear splash shield is the same.

1. Take out screw (1) and nut (2).
2. Take out two screws (3) and nuts (4). Take off rear splash shield (5).

END OF TASK

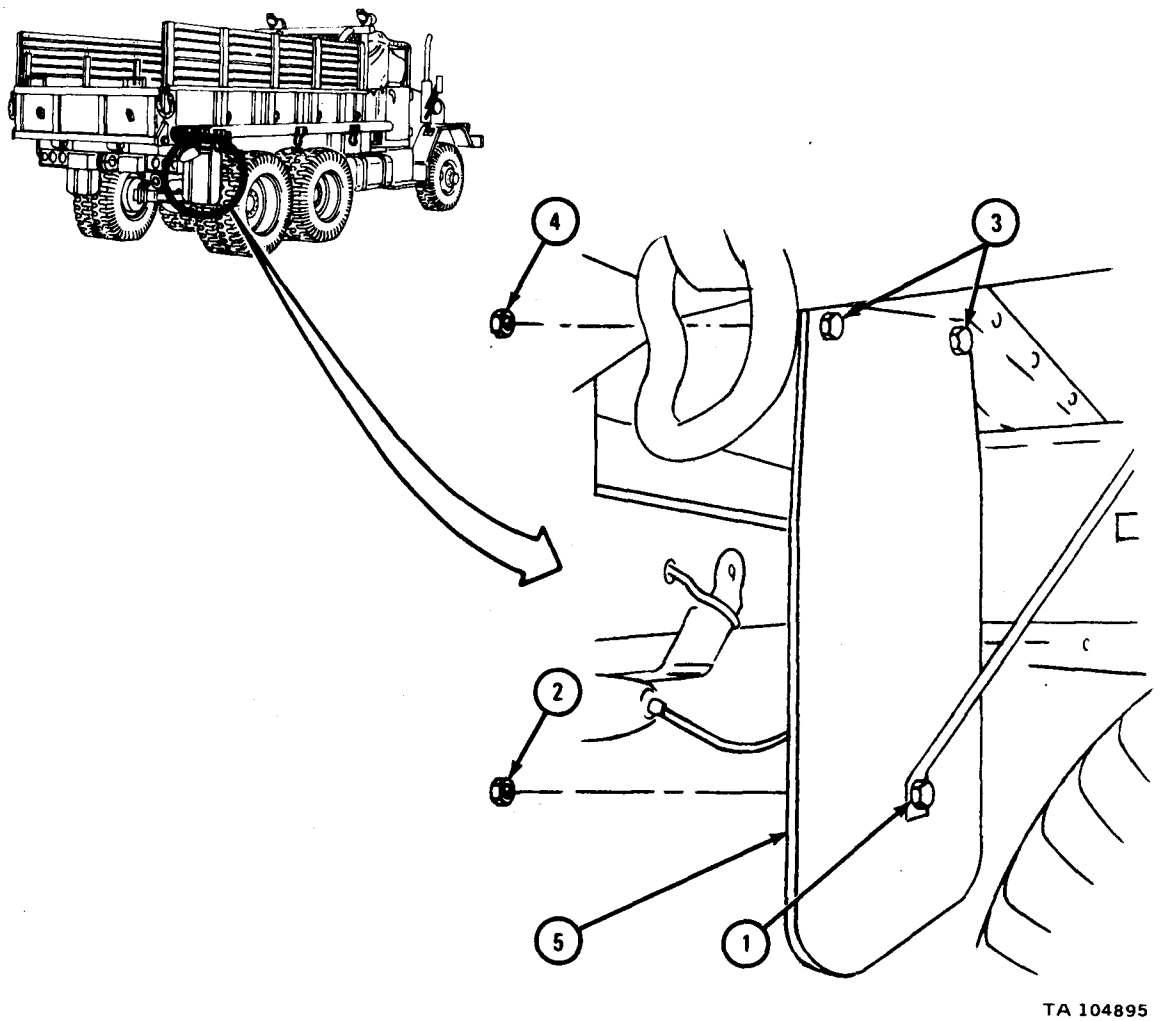

(4) Model M35A2C.

FRAME 1

1. Takeout two screws (1) and nuts (2).
2. Take out two screws (3) and nuts (4). Take off stripping (5).
3. Take out two screws (6) and nuts (7). Take off front splash shield (8).

GO TO FRAME 2

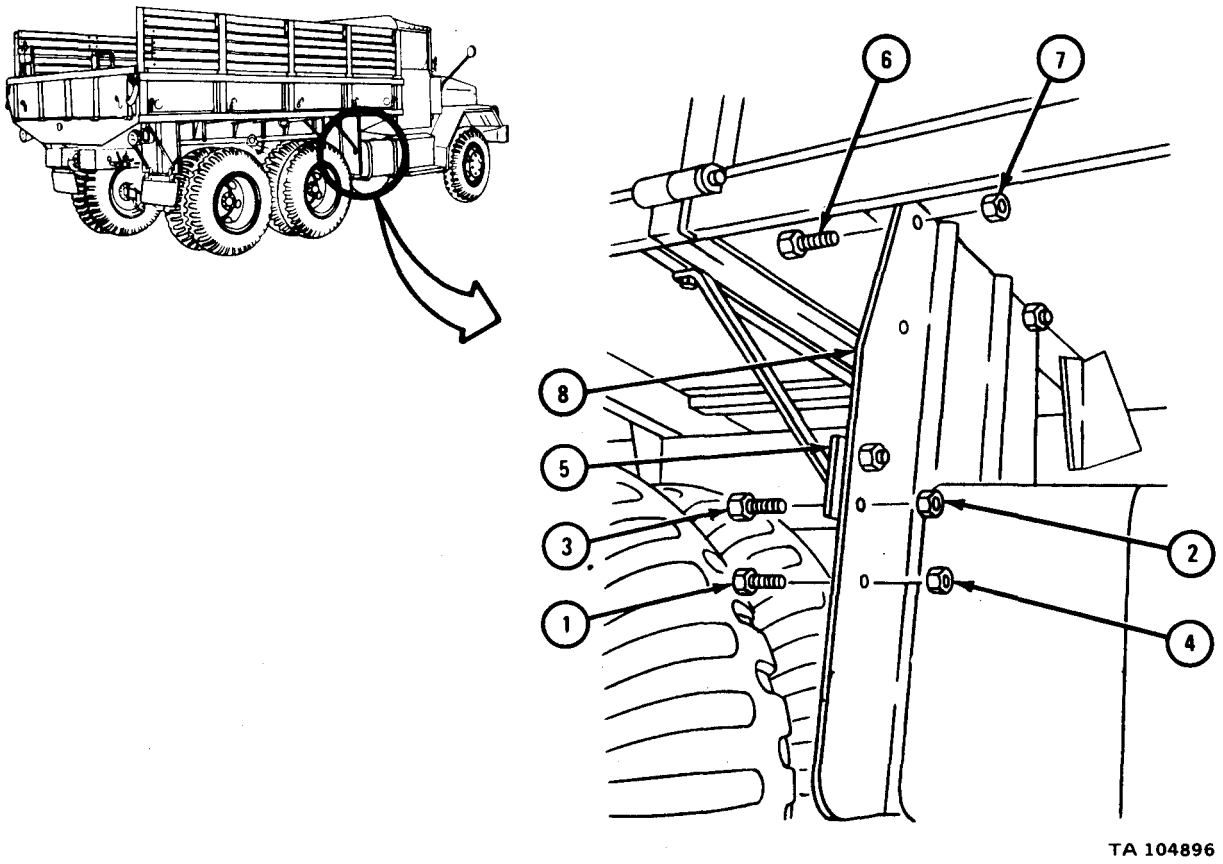

FRAME 2

1. Takeout two screws (1) and nuts (2).
2. Takeout two screws (3) and nuts (4). Take off stripping (5).
3. Take out two screws (6) and nuts (7).
4. Take out two screws (8) and nuts (9). Takeoff front splash shield (10).

GO TO FRAME 3

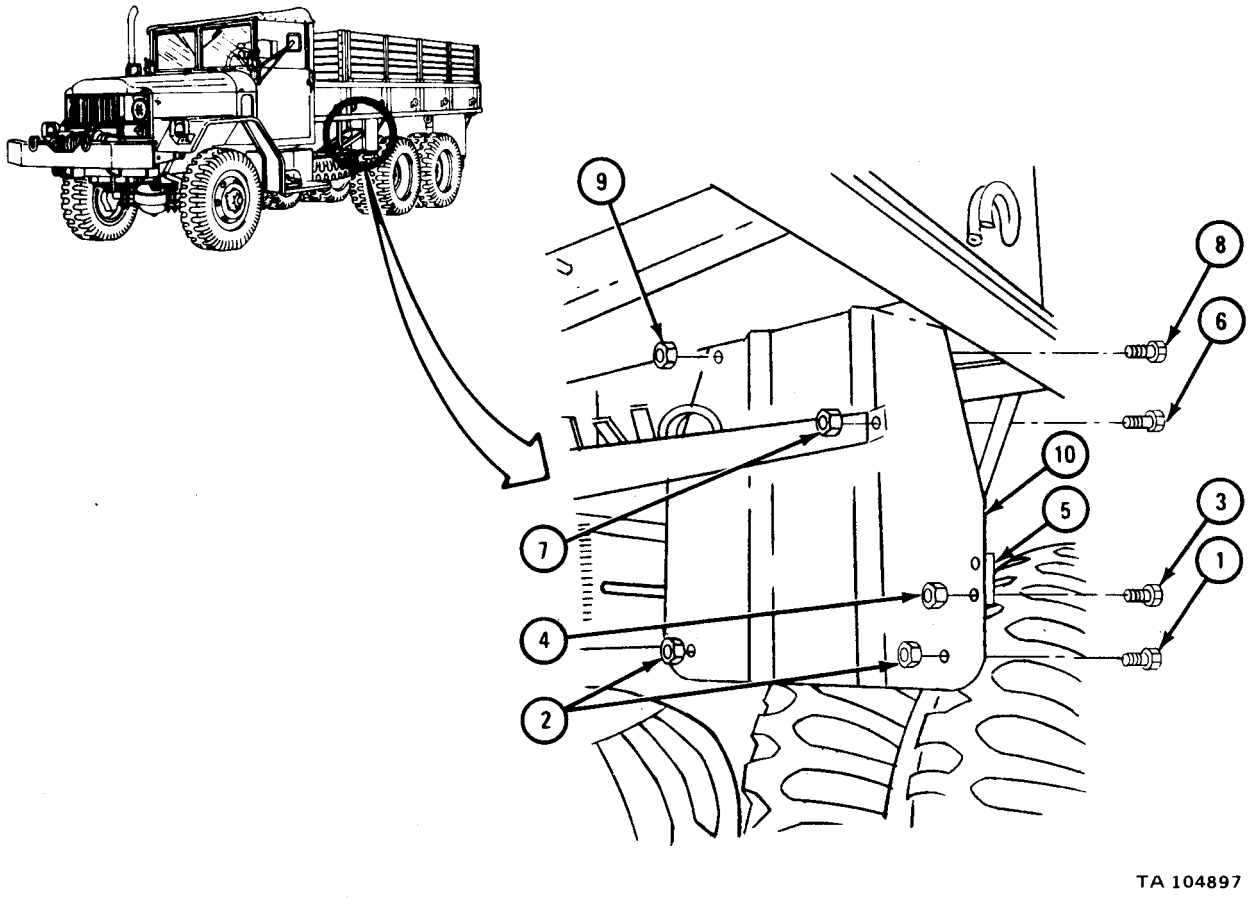

FRAME 3

NOTE

This task is the same for the left and right rear splash shields.

1. Take out two screws (1) and nuts (2) and take off rubber bumper(3).
2. Take out five screws (4) and nuts (5) and take off rubber splash shield (6).

GO TO FRAME 4

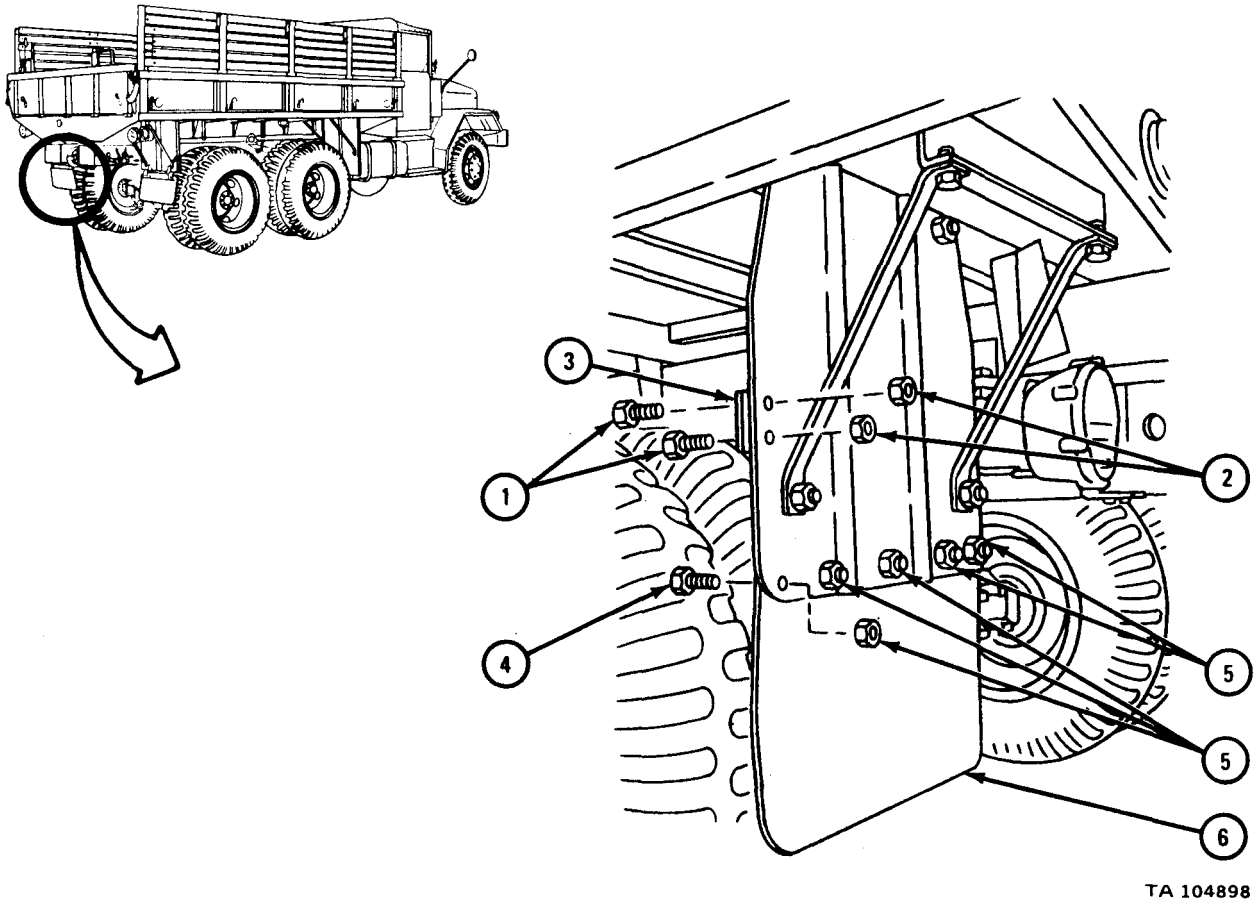

FRAME 4

1. Take out two screws (1) and nuts (2).
2. Takeout two screws (3) and nuts (4) and take off splash shield (5).

END OF TASK

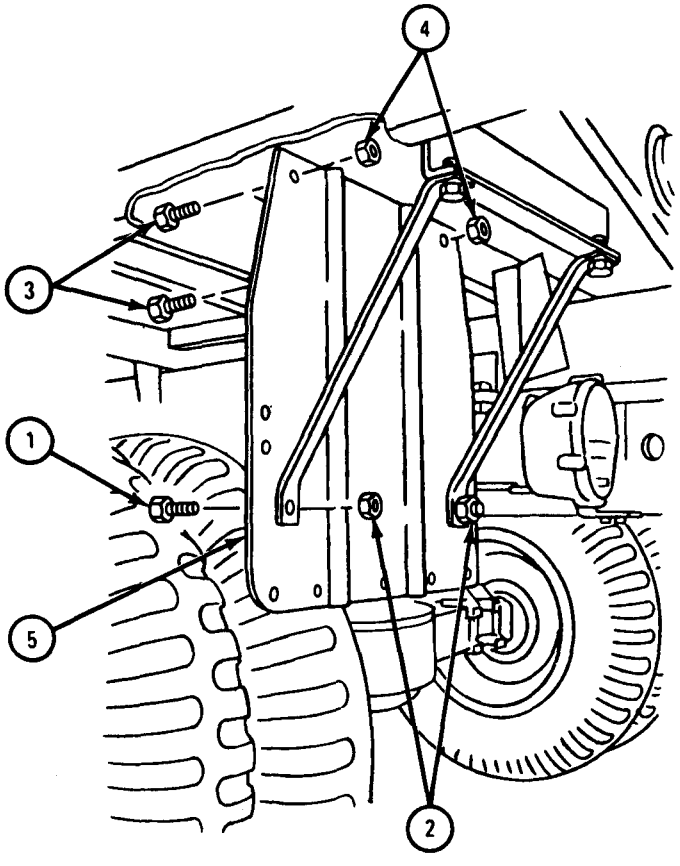

TA 104899

Model M185A3 and M109A3.

FRAME 1

1. Take out two screws (1) and nuts (2).
2. Take out two screws (3) and nuts (4).
3. Take out two screws (5) and nuts (6) and take off splash shield (7).

GO TO FRAME 2

FRAME 2

1. **Take out two screws (1) and nuts (2).**
2. **Take out two screws (3) and nuts (4) and take out splash shield (5).**

GO TO FRAME 3

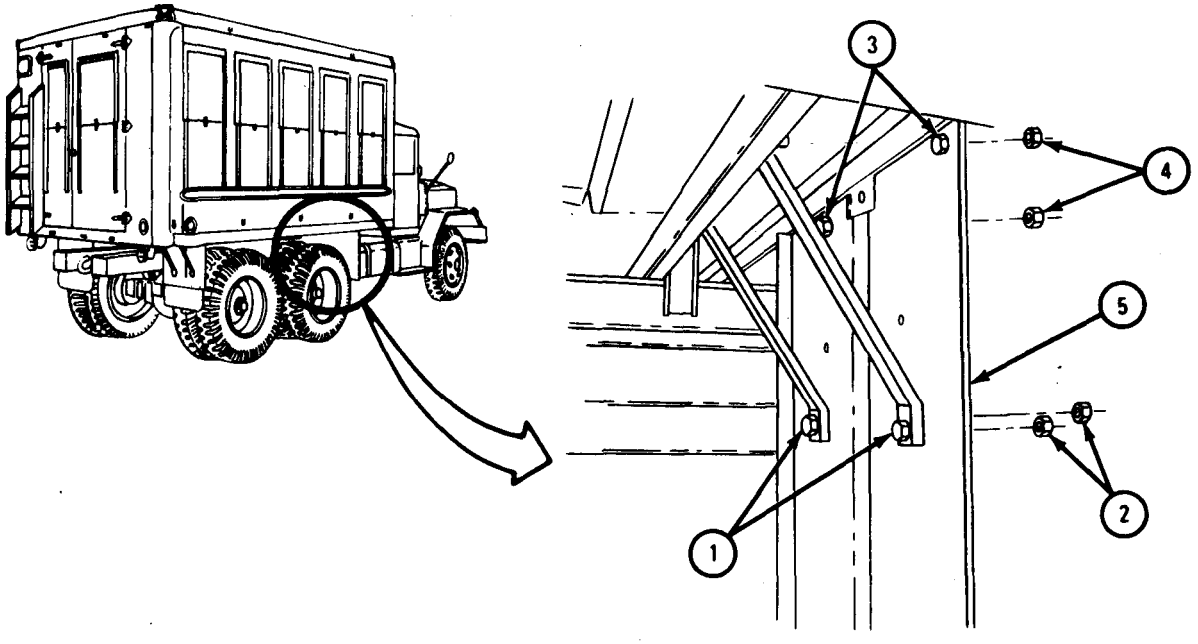

FRAME 3

NOTE

This task is the same for left and right rear splash shields. Task is shown for the left rear splash shield.

1. Take out four screws (1) and nuts (2) and take off mud flap (3).
2. Take out two screws (4) and nuts (5).
3. Take out two screws (6) and nuts (7) and take off rubber splash shield (8).

END OF TASK

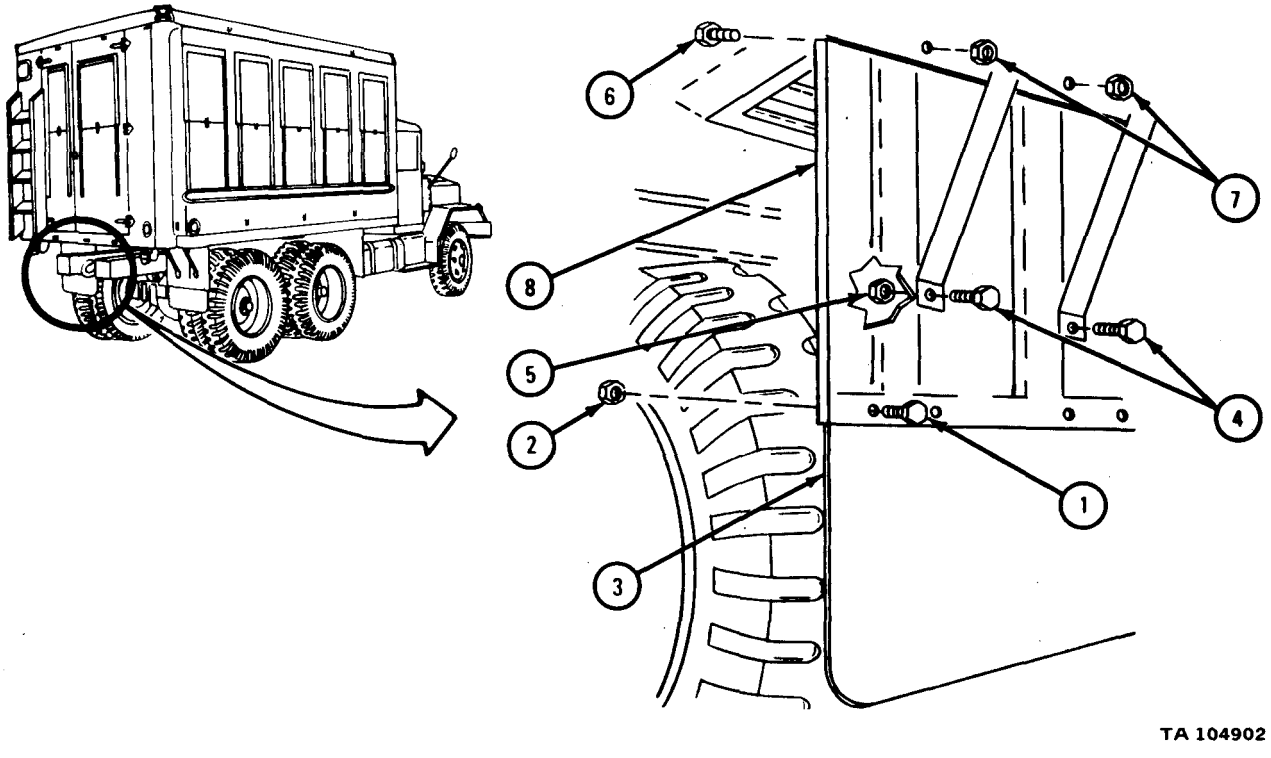

(6) Model M36A2.

FRAME 1

1. Take out two screws (1) and nuts (2) .
2. Take out two screws (3) and nuts (4) and take off splash shield (5).

GO TO FRAME 2

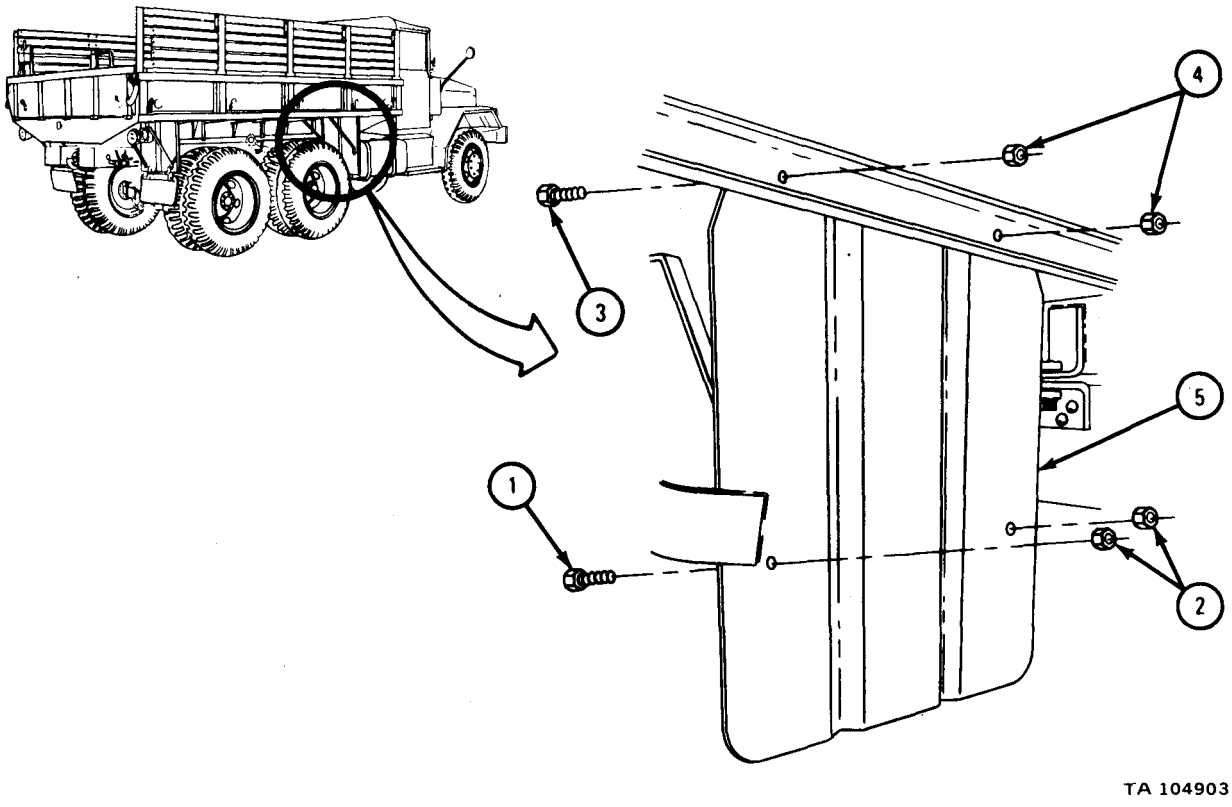

FRAME 2

1. Takeout two screws (1) and nuts (2).
2. Takeout two screws (3) and nuts (4).
3. Takeout two screws (5) and nuts (6) and take off splash shield (7).

GO TO FRAME 3

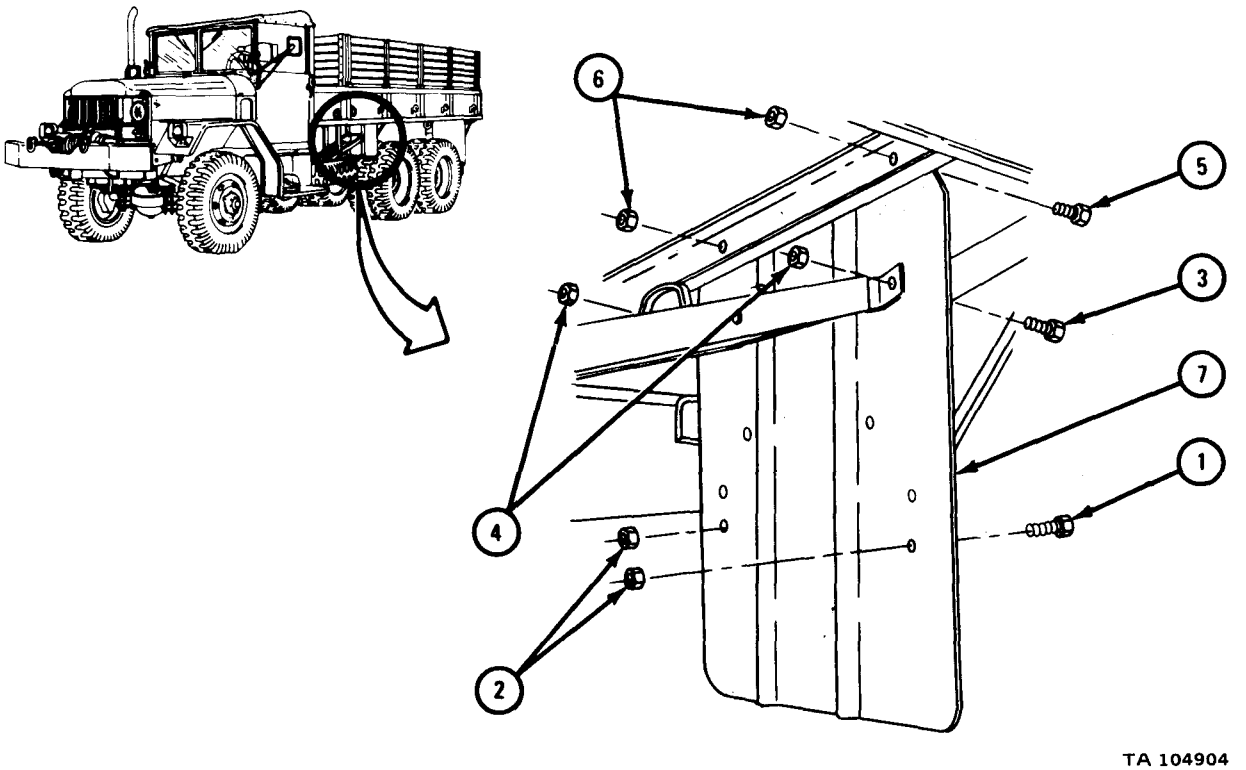

FRAME 3

NOTE

This task is the same for both rear splash shields.
Task is shown for left rear splash shield.

1. Take out five screws (1) and nuts (2) and take off rubber splash shield (3).
2. Take out two screws (4) and nuts (5).
3. Take out two screws (6) and nuts (7) and take off splash shield (8).

END OF TASK

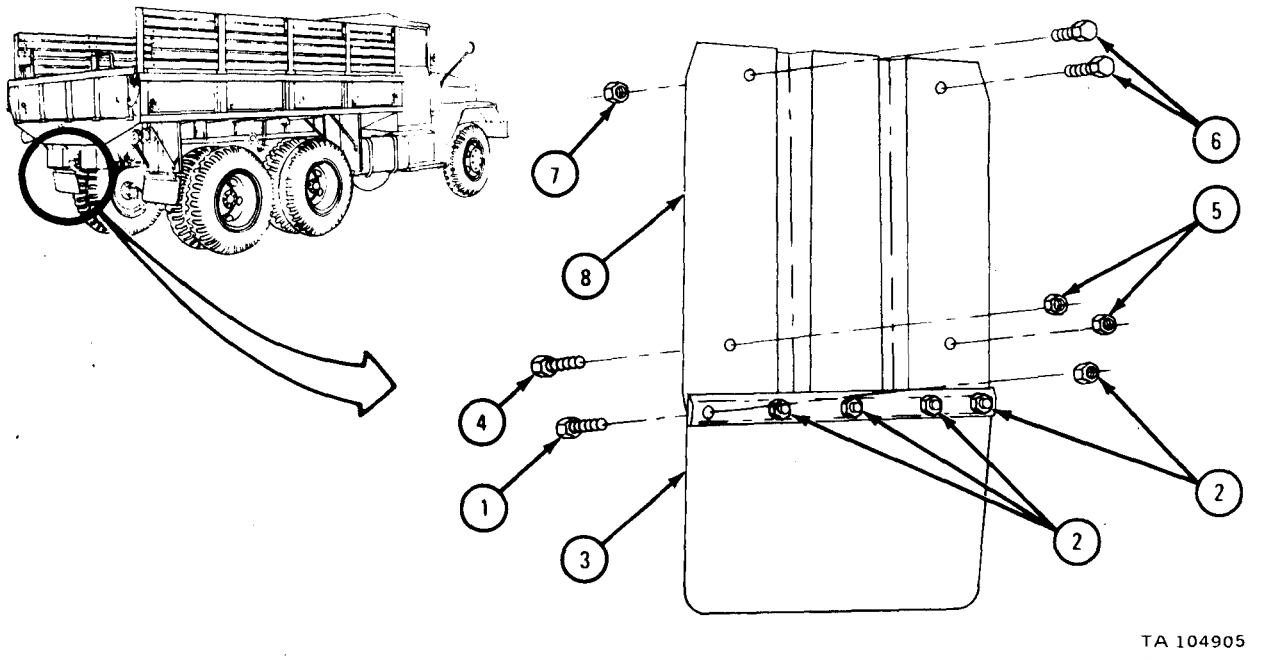

(7) Models M49A1C, M49A2C, and M50A3.

FRAME 1

1. Take off three nuts (1) and screws (2). Take off rubber splash shield (3) from splash shield (4).
2. Take off two nuts (5) and screws (6) holding two braces (7) to splash shield (4).

GO TO FRAME 2

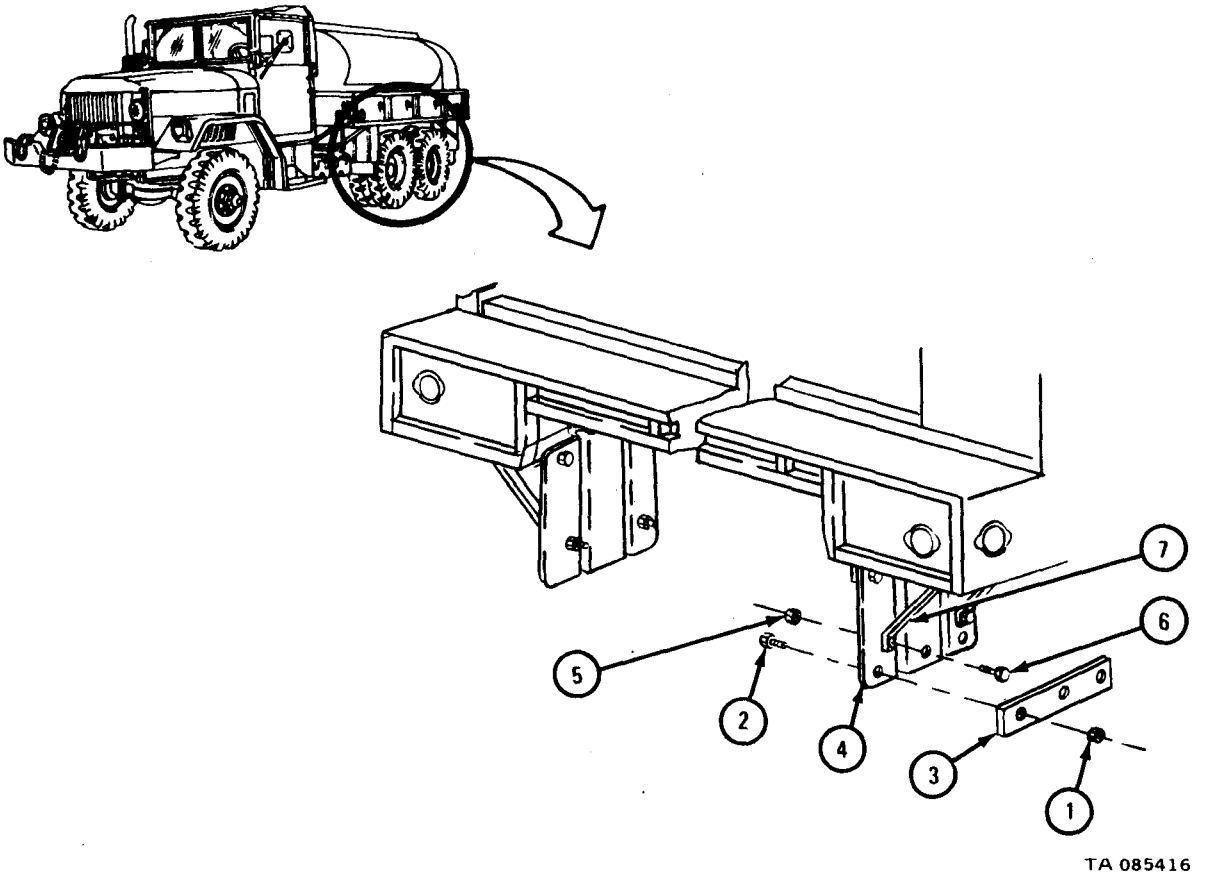

FRAME 2

1. Take off two nuts (1) and screws (2). Take off two braces (3) from truck body (4).
2. Take off three nuts (5) and screws (6). Take off splash shield (7).

GO TO FRAME 3

FRAME 3

1. Take off two nuts (1) and screws (2) holding two braces (3) to splash shield (4).
2. Take off two nuts (5) and screws (6). Take off two braces (3) from truck body (7).
3. Take off two nuts and screws (8) holding pioneer bracket (9) to splash shield (4).

GO TO FRAME 4

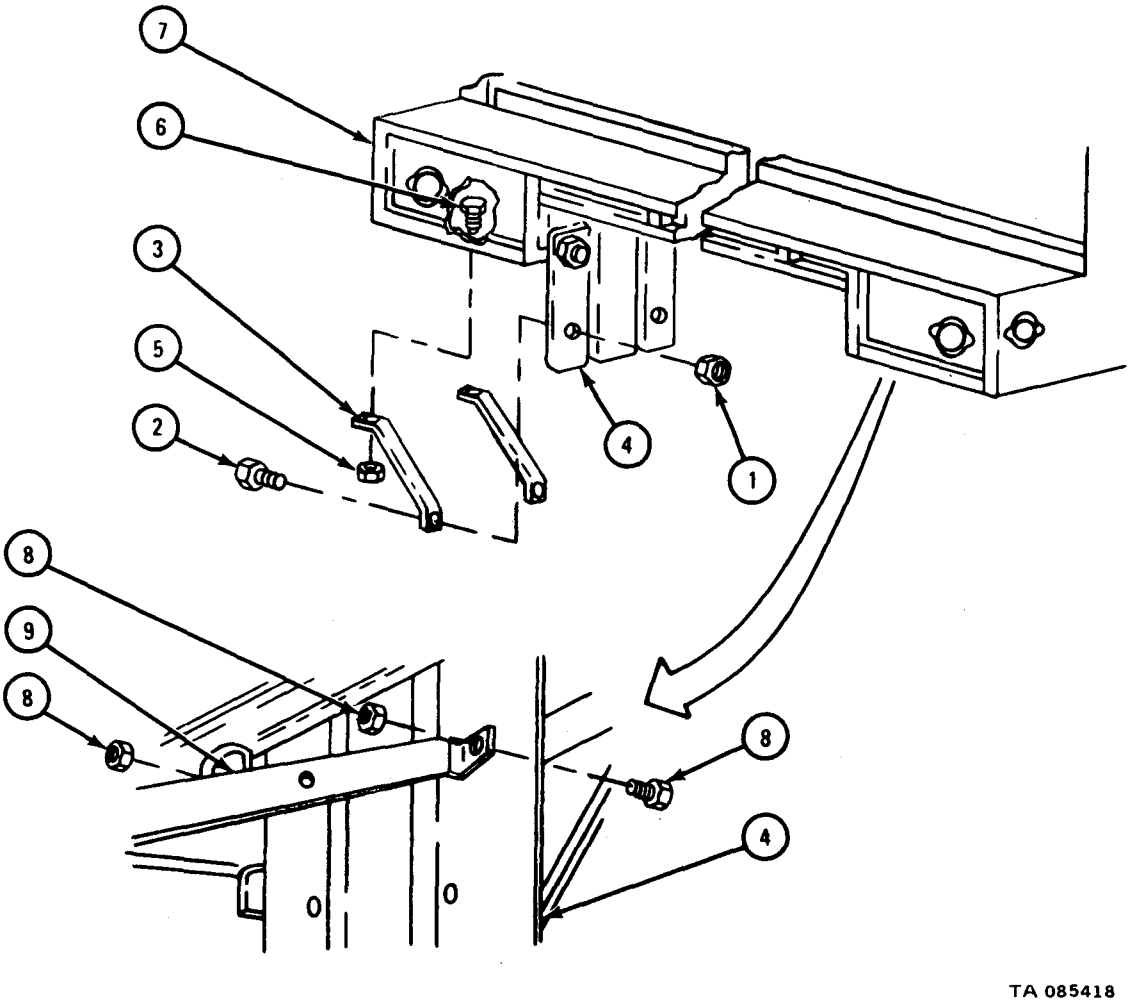

FRAME 4

1. Take off three nuts (1) and screws (2). Take off splash shield (3) from truck body (4).

END OF TASK

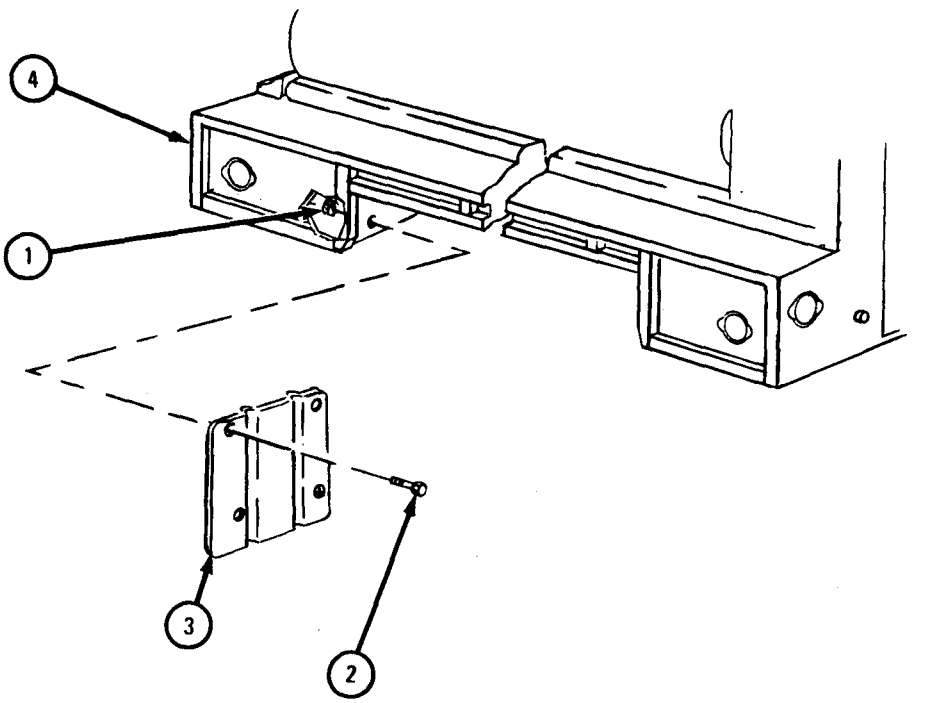

TA 085419

WARNING

Dry cleaning solvent is flammable. Do not use near an open flame. Keep a fire extinguisher nearby when solvent is used. Use only in well-ventilated places. Failure to do this may result in injury to personnel and damage to equipment.

b. Cleaning. Clean all parts with dry cleaning solvent.

Inspection and Repair.

FRAME 1

1. Check that splash shield (1) does not have bends, dents, tears, or holes. Repair by straightening or welding. Refer to TM 9-237 for welding procedures,
2. Check that rubber splash shield (2) is not torn.
3. Check that all threaded parts are not stripped or cross-threaded.
4. Get new parts for damaged parts.

END OF TASK

d. Replacement.

(1) Model M275A1 and M275A2.

FRAME 1

NOTE

Models M275A1 and M275A2 have front splash shields only. This task is for the left splash shield. The task for the right splash shield is the same.

1. Put splash shield (1) in place and aline screwholes. Put in four capscrews (2) and nuts (3).
2. Put in three capscrews (4) and nuts (5).

END OF TASK

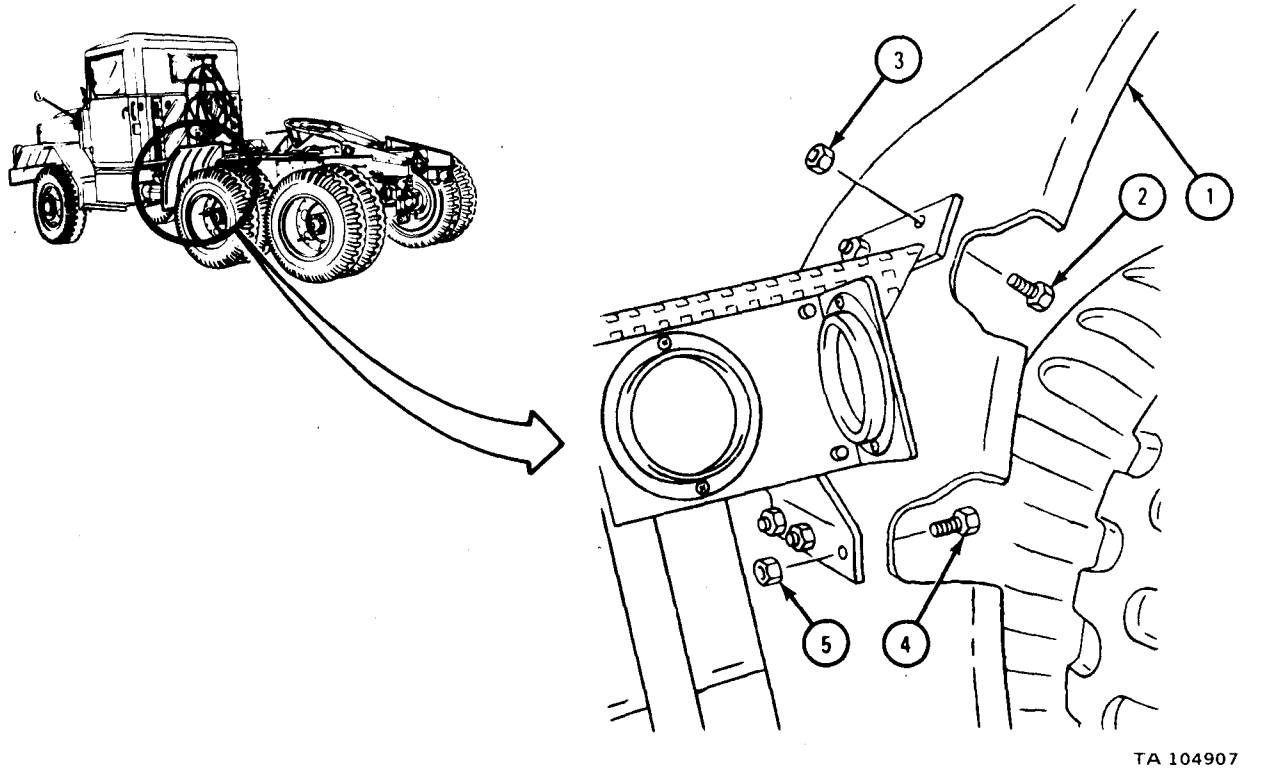

(2) Model M342A2.

FRAME 1

NOTE

This task shows the right front splash shield. The task is the same for the left front splash shield.

1. Put splash shield (1) in place and aline screw holes. Put in four capscrews (2) and nuts (3).
2. Put in two capscrews (4) and nuts (5).

GO TO FRAME 2

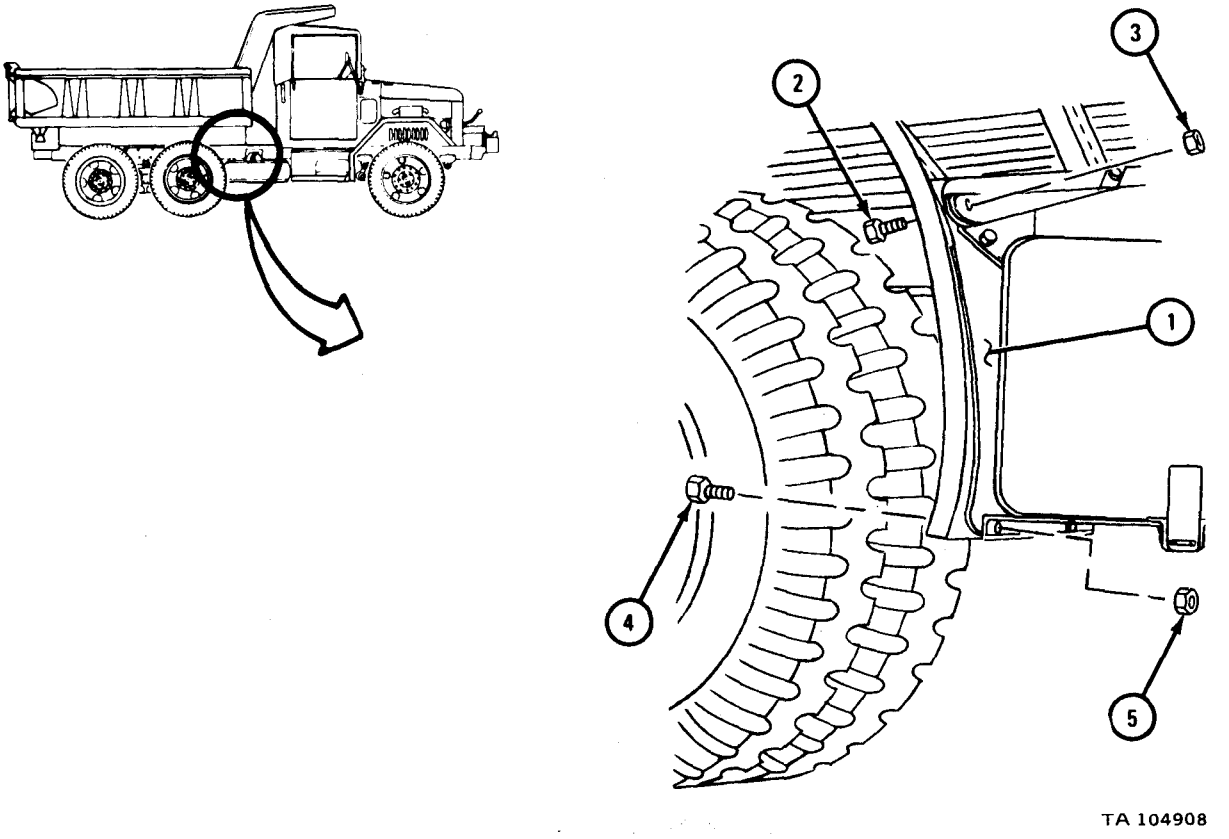

FRAME 2

NOTE

This task shows the left rear splash shield. The task is the same for the right rear splash shield.

1. Put upper shield (1) in place and aline screwholes. Put in five cap screws (2) and nuts (3).
2. Put lower shield (4) in place and aline screwholes. Put in five cap screws (5) and nuts (6).

END OF TASK

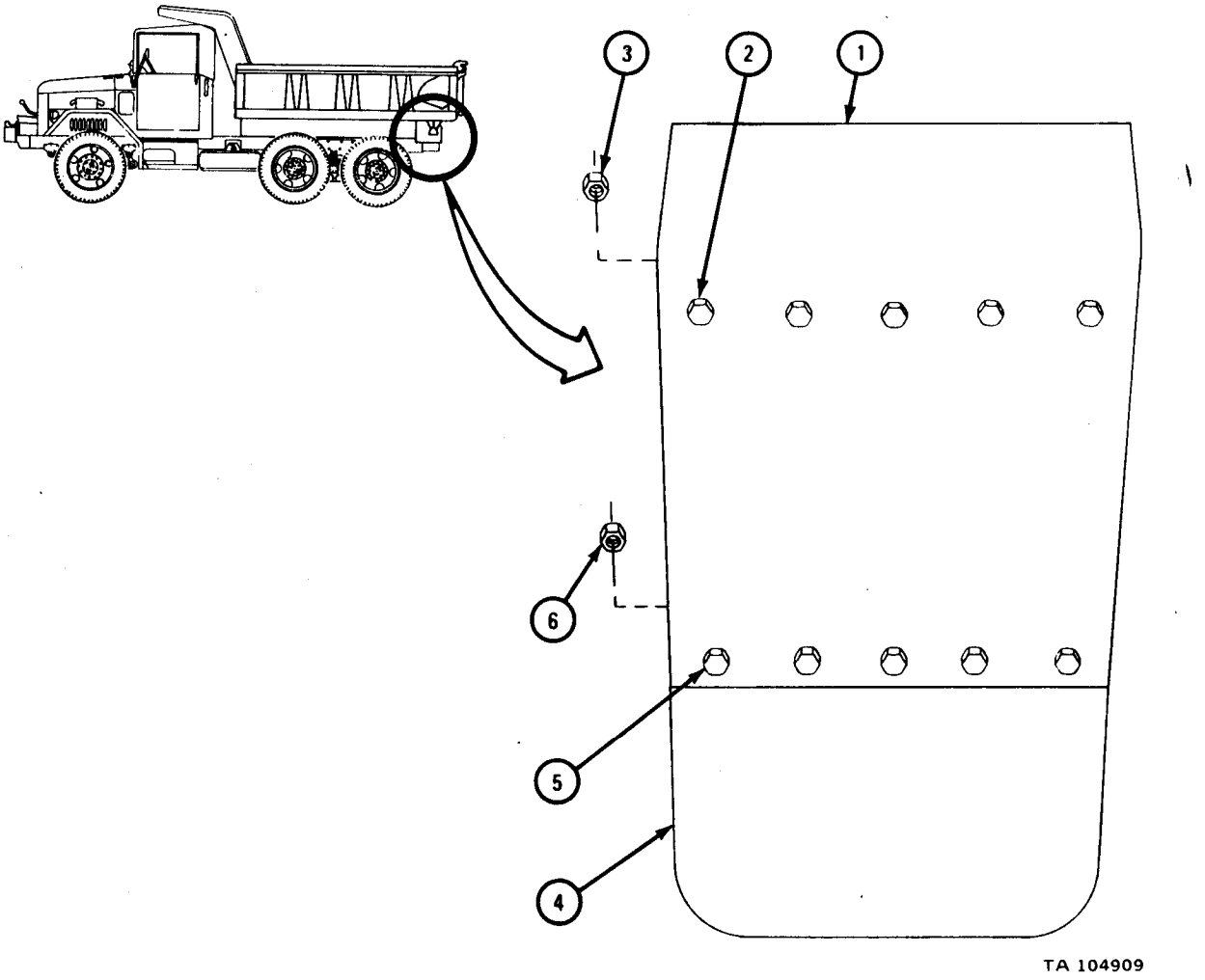

(3) Model M756A2.

FRAME 1

1. Put front splash shield (1) in place and aline screw holes. Put on two screws (2) and nuts (3).
2. Put in screw (4) and nut (5).

GO TO FRAME 2

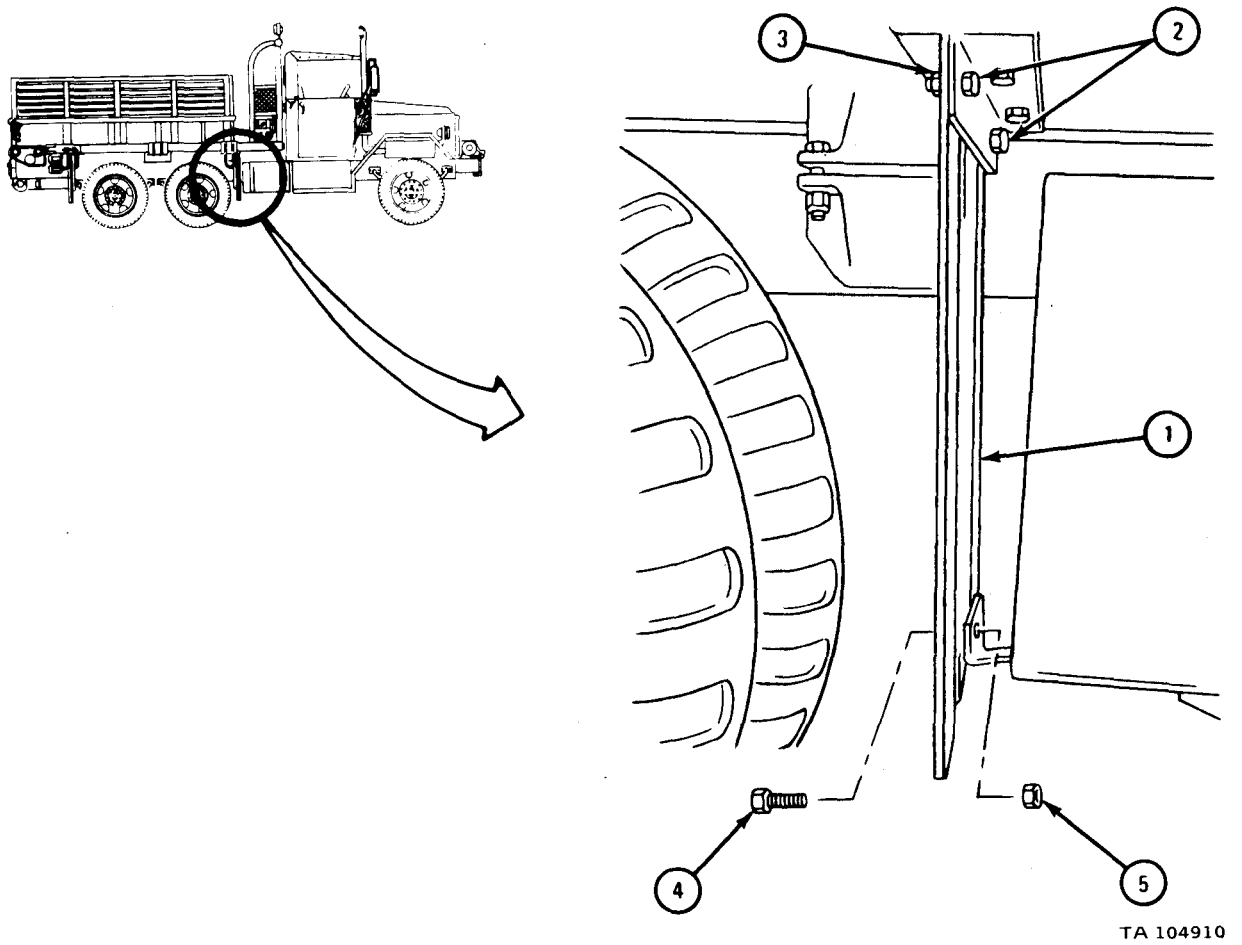

FRAME 2

NOTE

This task is for the right rear splash shield. The task is the same for the left rear splash shield.

1. Put rear splash shield (1) in place and aline screw holes. Put in two screws (2) and nuts (3).
2. Put in screw (4) and nut (5).

END OF TASK

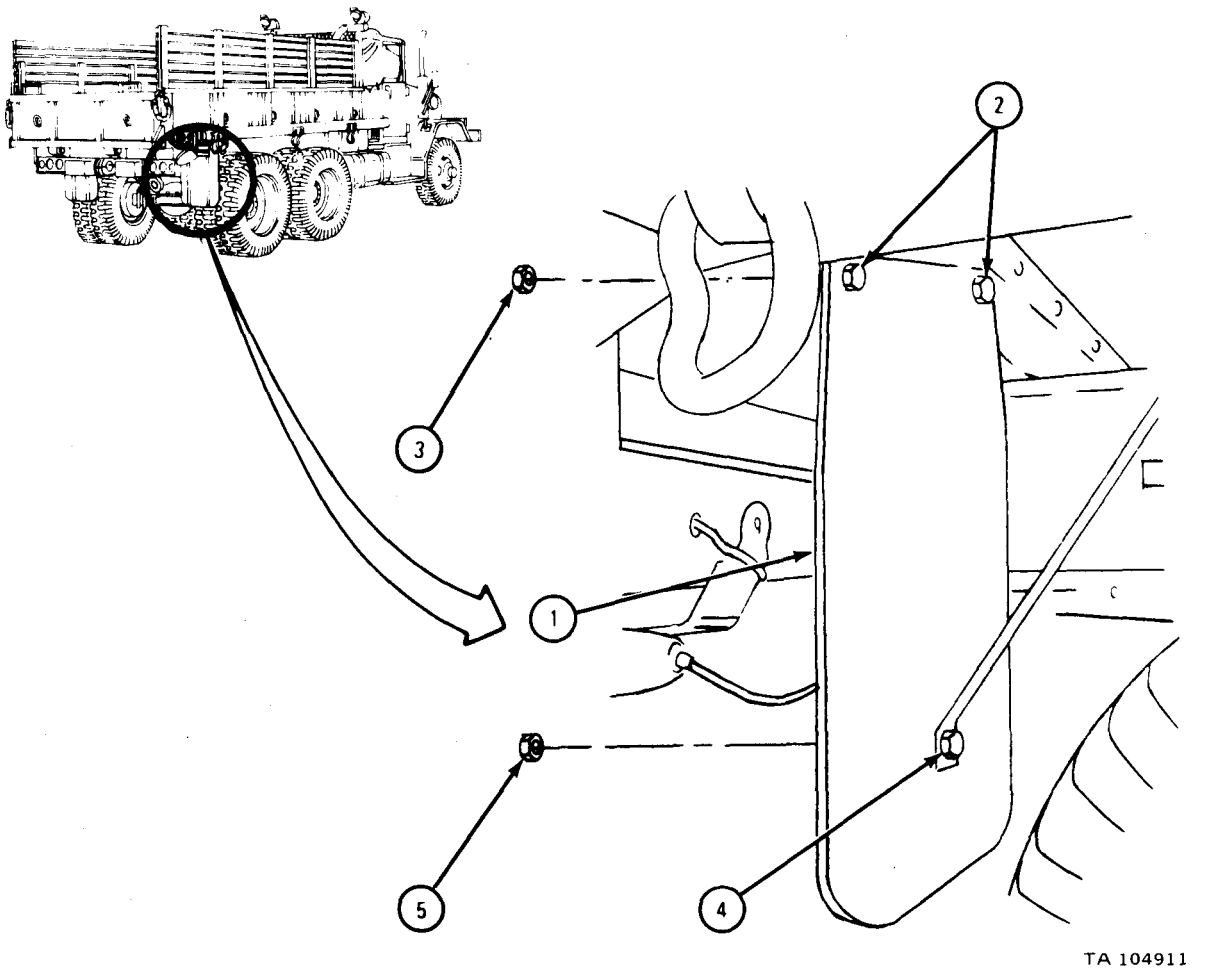

(4) Model M35A2C.

FRAME 1

1. Put splash shield (1) in place and aline screwholes. Put in two screws (2) and nuts (3).
2. Put stripping (4) in place and aline screwholes. Put in two screws (5) and nuts (6).
3. Put in two screws (7) and nuts (8).

GO TO FRAME 2

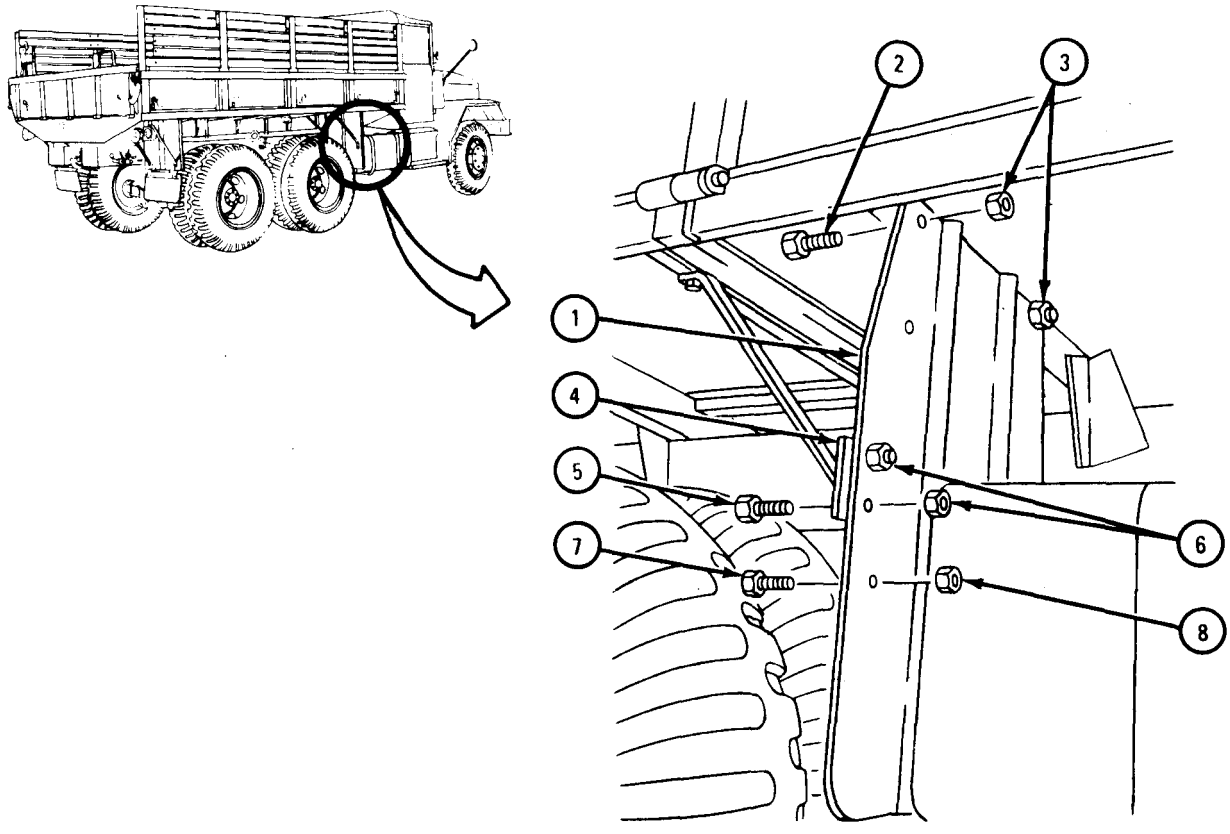

TA 104912

FRAME 2

1. Put front splash shield (1) in place and aline screw holes. Put in two screws (2) and nuts (3).
2. Put in two screws (4) and nuts (5).
3. Put stripping (6) in place and aline screw holes. Put in two screws (7) and nuts (8).
4. Put in two screws (9) and nuts (10).

GO TO FRAME 3

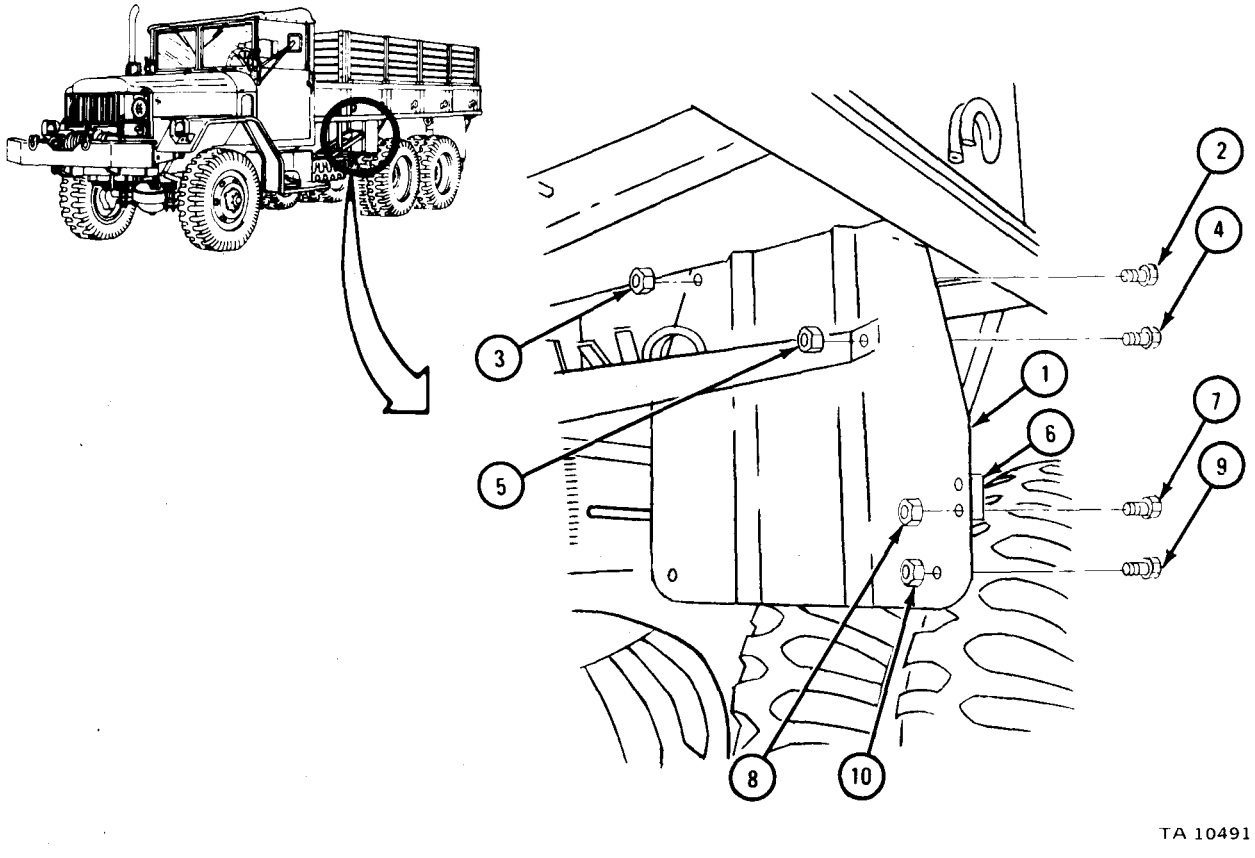

FRAME 3

NOTE

This task is the same for the left and right rear splash shields. Task is for the left rear splash shield.

1. Put splash shield (1) in place and aline screw holes. Put in two screws (2) and nuts (3).
2. Put in two screws (4) and nuts (5).
3. Put rubber bumper (6) in place and aline screw holes. Put in two screws (7) and nuts (8).

GO TO FRAME 4

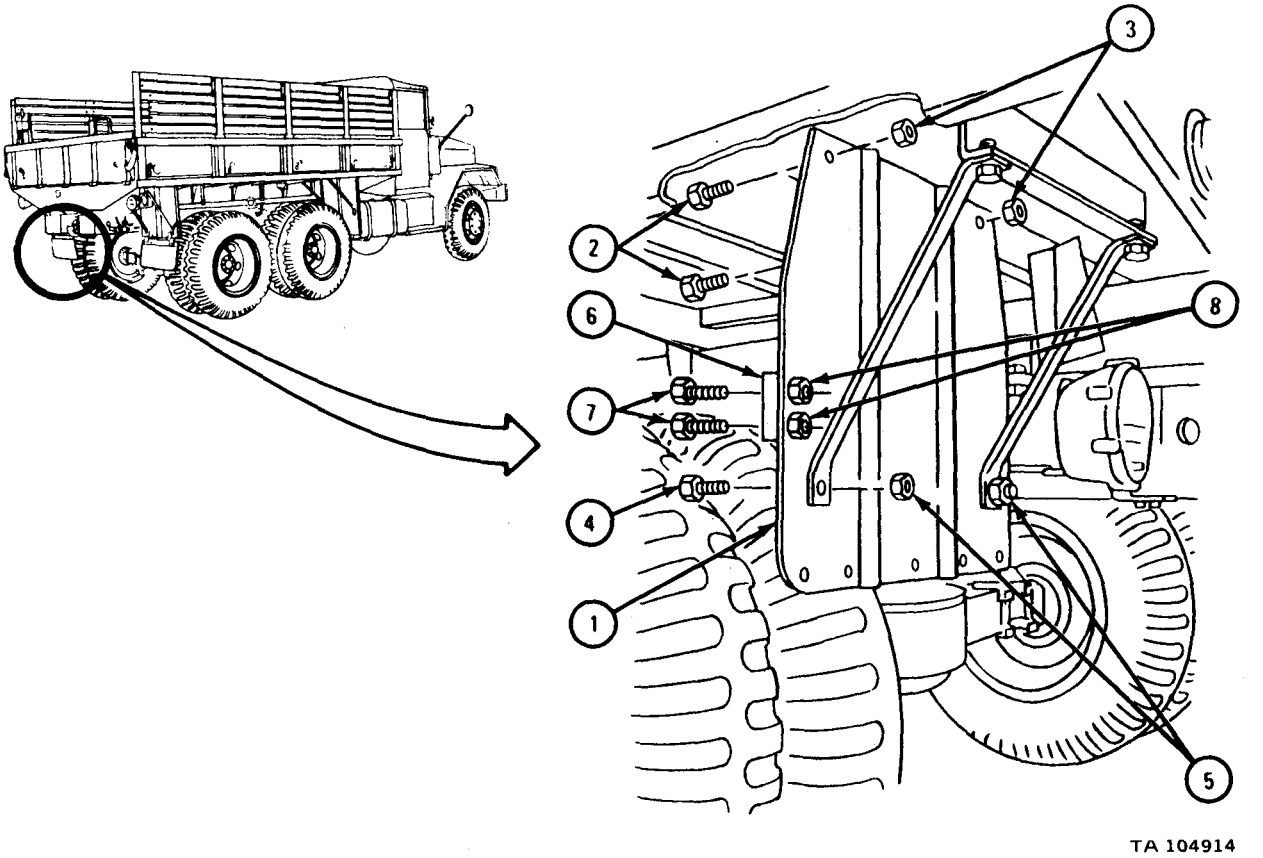

FRAME 4

1. Put rubber splash shield (1) in place. Aline screw holes.
2. Put in five screws (2) and nuts (3).

END OF TASK

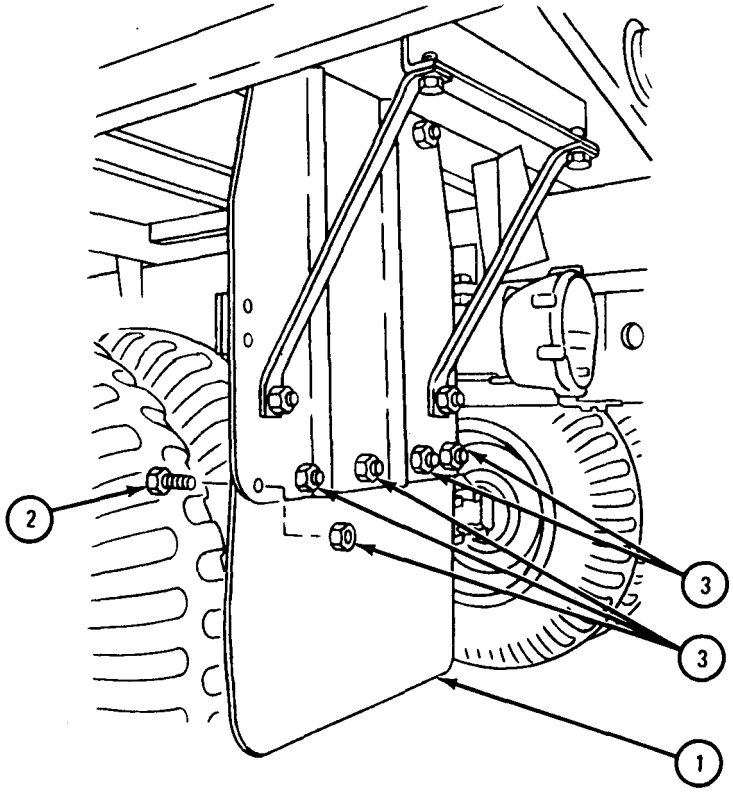

TA 104915

(5) Models M185A3and M109A3.

FRAME 1

1. Put splash shield (1) in place and aline screw holes. Put in two screws (2) and nuts (3).
2. Put in two screws (4) and nuts (5).
3. Put in two screws (6) and nuts (7).

GO TO FRAME 2

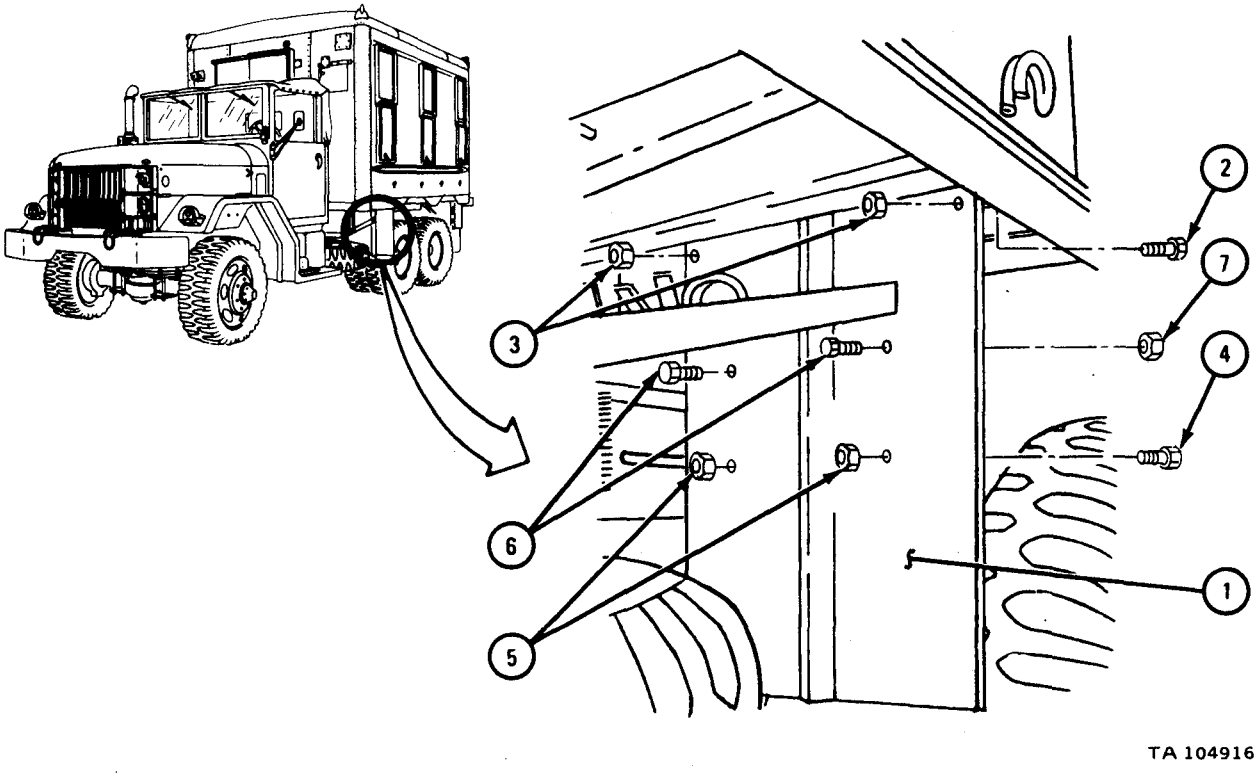

FRAME 2

1. Put splash shield (1) in place and aline screw holes. Put in two screws (2) and nuts (3).
2. Put in two screws (4) and nuts (5).

GO TO FRAME 3

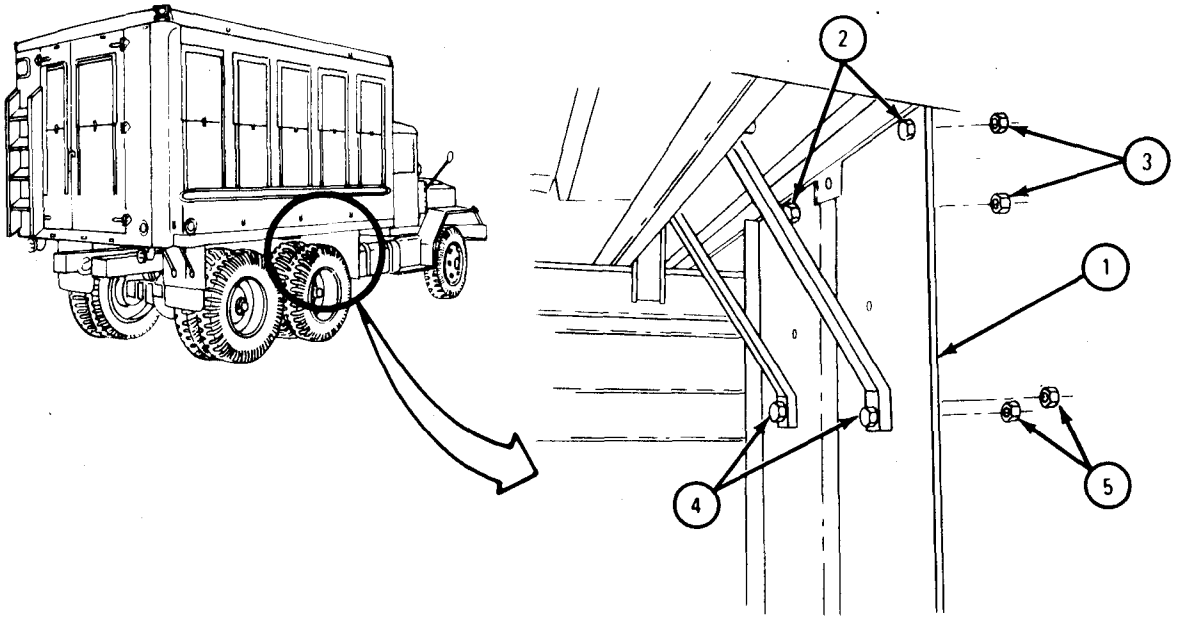

FRAME 3

NOTE

This task is the same for left and right rear splash shields. Task is shown for the left rear splash shield.

1. Put splash shield (1) in place and aline screw holes. Put in two screws (2) and nuts (3).
2. Put in two screws (4) and nuts (5).
3. Put rubber splash shield (6) in place and aline screw holes. Put in four screws (7) and nuts (8).

END OF TASK

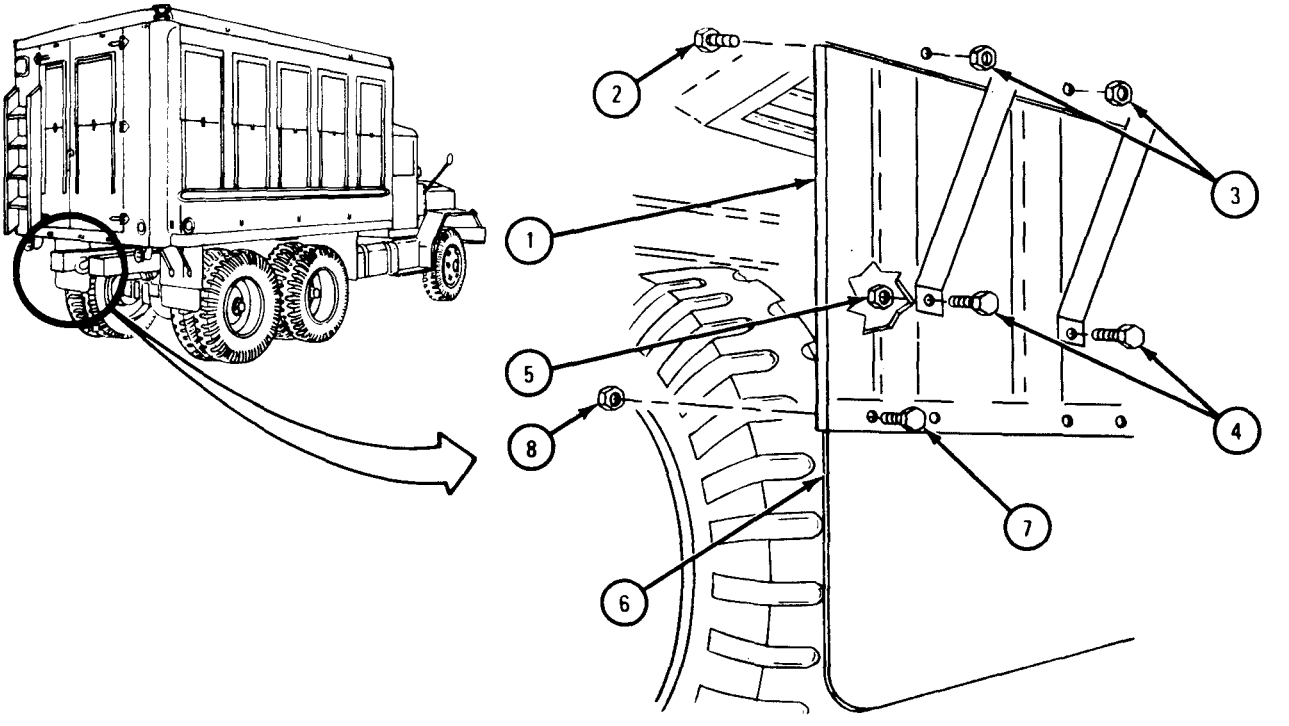

TA 104918

(6) Model M36A2.

FRAME 1

1. Put splash shield (1) in place and aline screw holes. Put in two screws (2) and nuts (3).
2. Put in two screws (4) and nuts (5).

GO TO FRAME 2

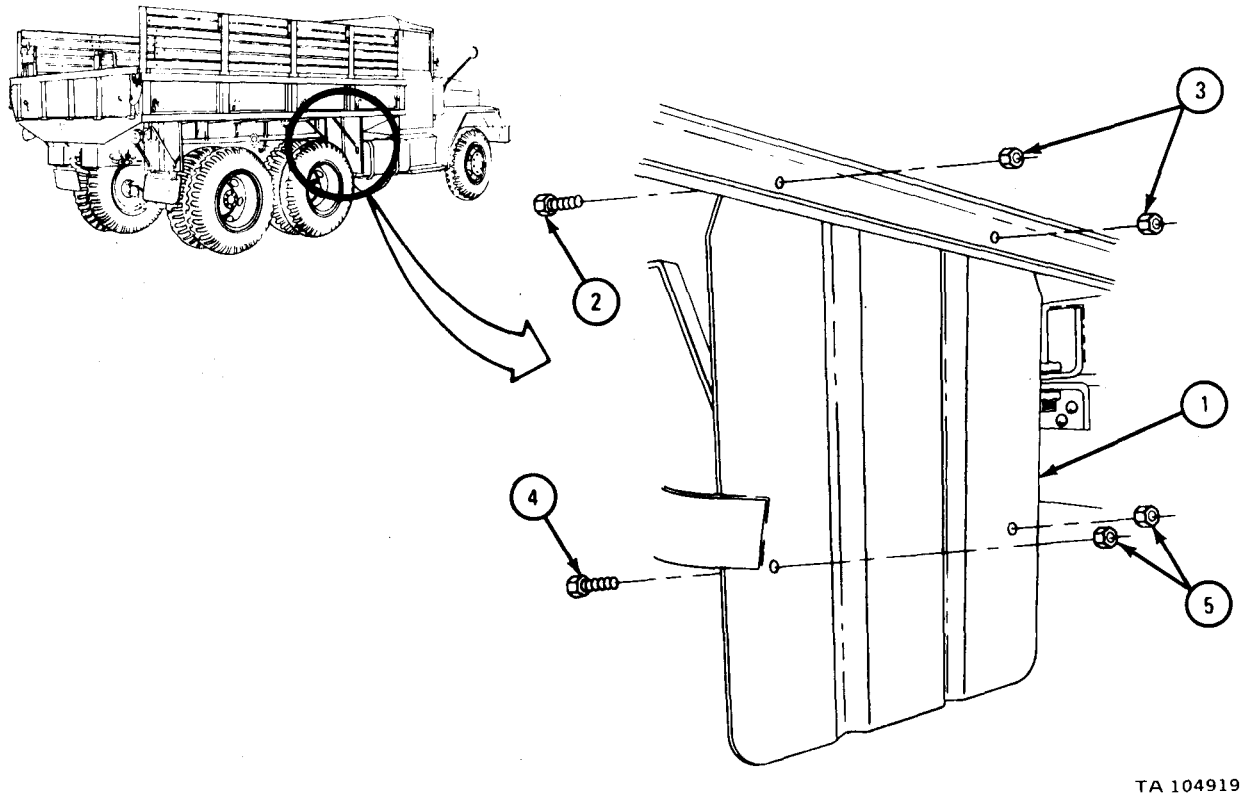

FRAME 2

1. Put splash shield (1) in place and aline screw holes. Put in two screws (2) and nuts (3).
2. Put in two screws (4) and nuts (5).
3. Put in two screws (6) and nuts (7).

GO TO FRAME 3

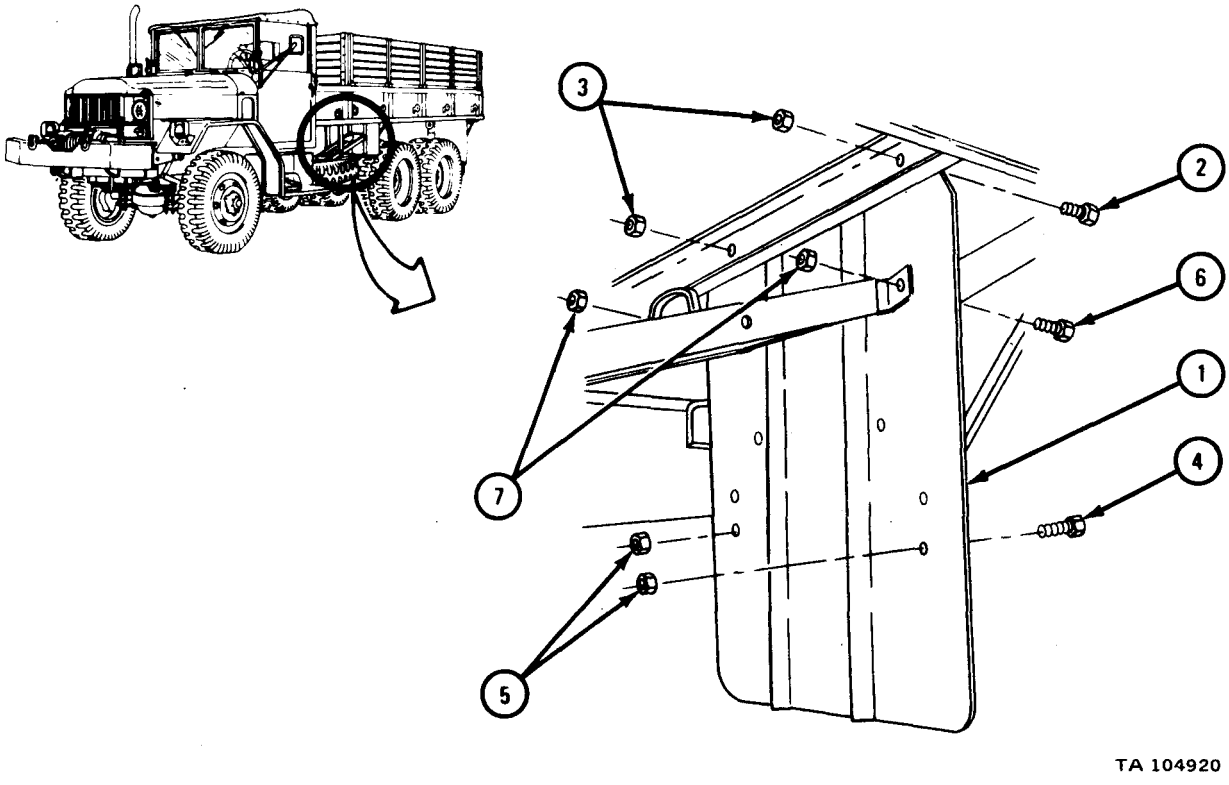

FRAME 3

NOTE

This task is the same for both rear splash shields.
Task is shown for left rear splash shield.

1. Put splash shield (1) in place and aline screw holes. Put in two screws (2) and nuts (3).
2. Put in two screws (4) and nuts (5).
3. Put rubber splash shield (6) in place and aline screw holes. Put in five screws (7) and nuts (8).

END OF TASK

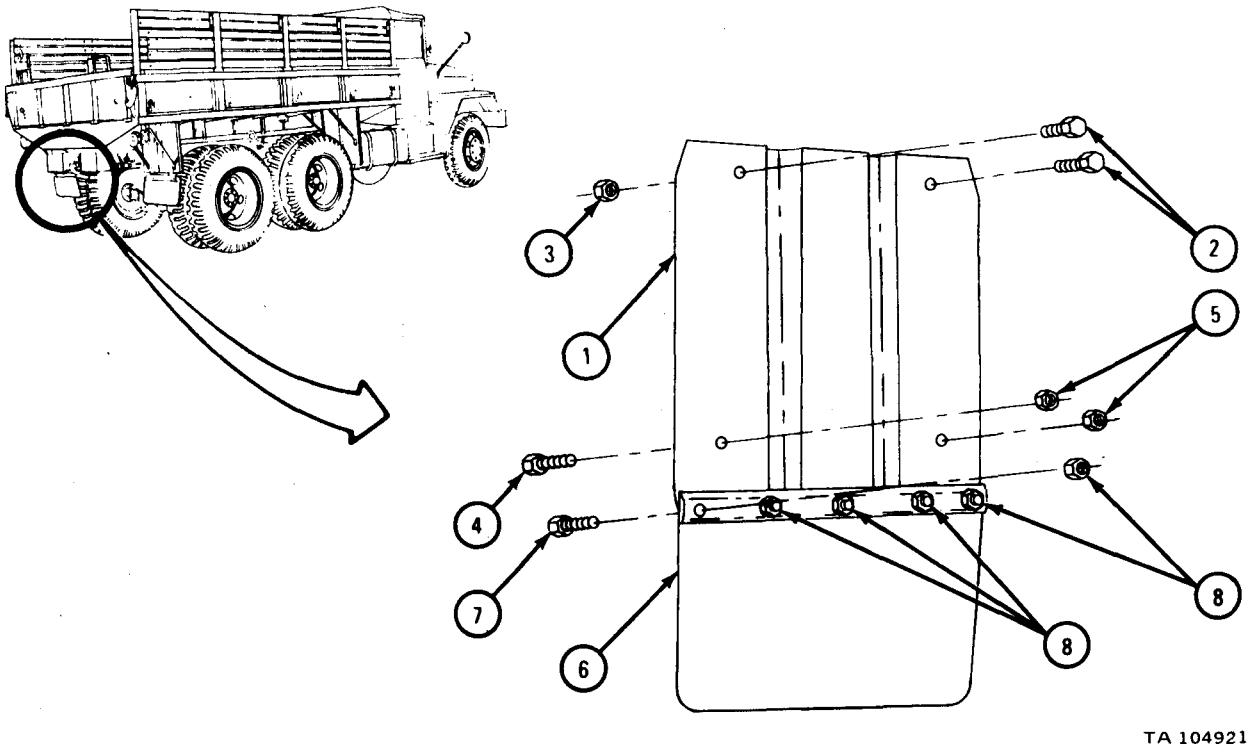

(7) Models M49A1C, M49A2C, and M50A3,

FRAME 1

1. Put splash shield (1) on truck body (2) and put in two screws (3).
2. Put two nuts (4) on screws (3).

GO TO FRAME 2

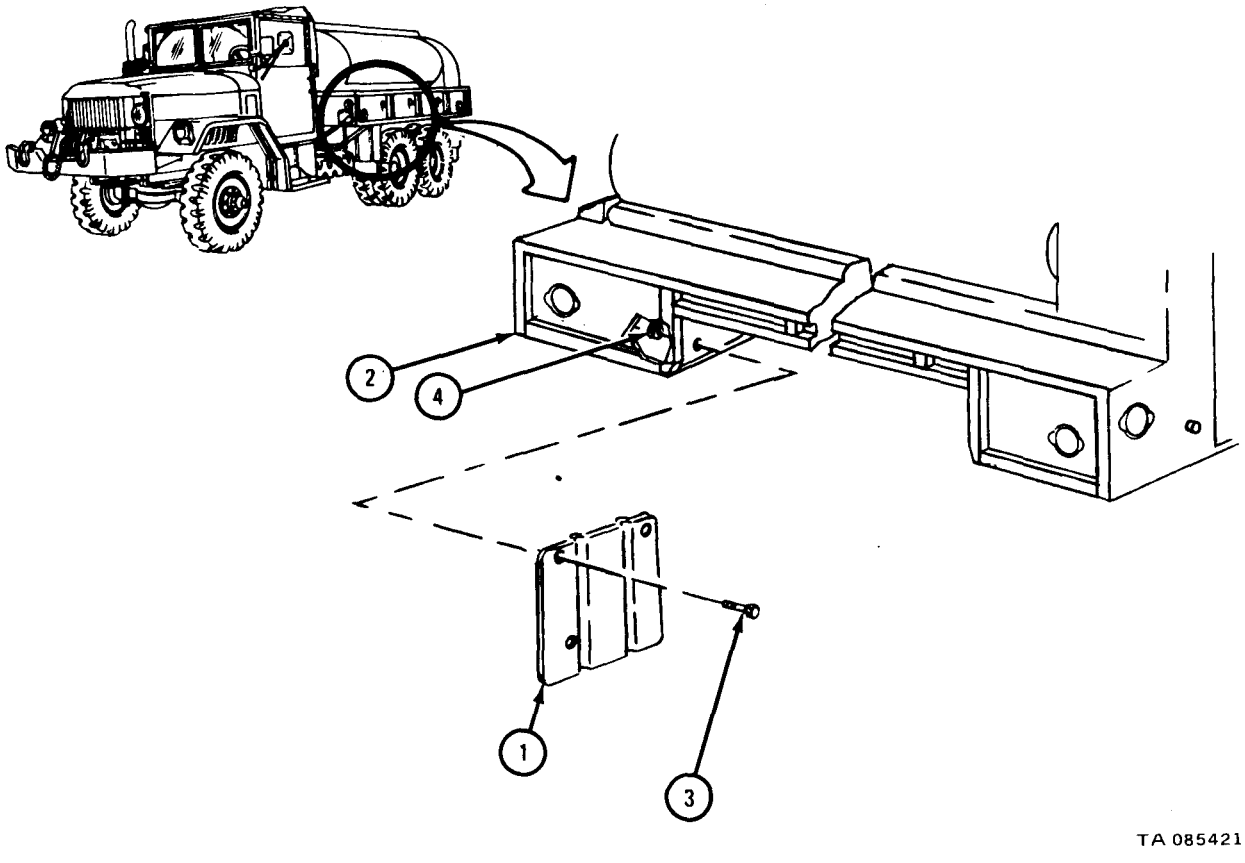

FRAME 2

1. Put brace (1) on truck body (2) and put in screw (3}.
2. Put nut (4) on screw (3).
3. Put screw (5) through brace (1) and splash shield (6).
4. Put nut (7) on screw (5).
5, Put in two screws (8) and nuts (9).
6. Do steps l through 5 again for other brace (l).

GO TO FRAME 3

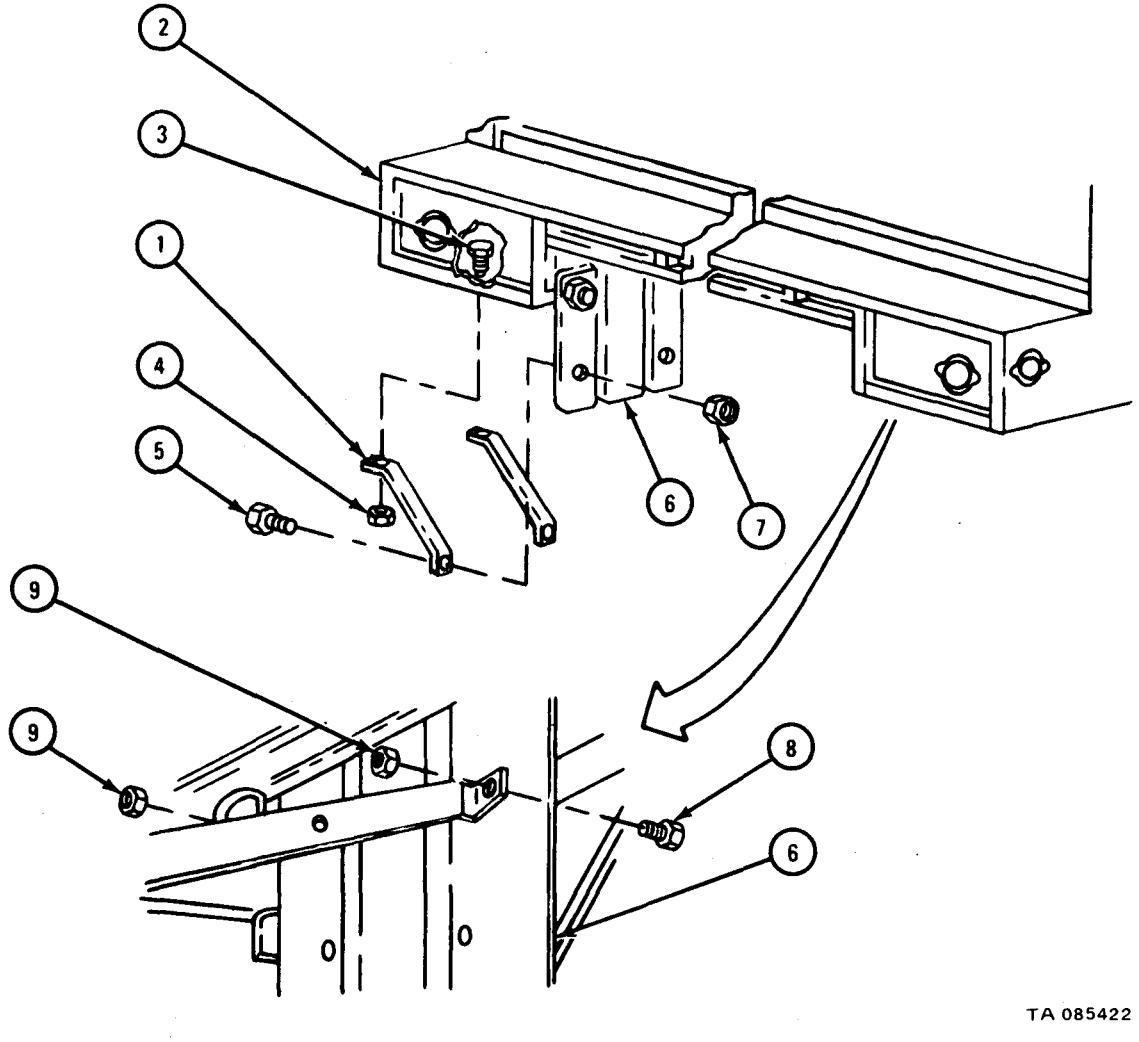

FRAME 3

1. Put splash shield (1) on truck body (2) and put in two screws (3).
2. Put two nuts (4) on screws (3).
3. Put brace (5) on truck body (2) and put in screw (6) and put on nut (7).
4. Put screw (8) through brace (5) and splash shield (1) and put on nut (9).
5. Do steps 3 and 4 again for other brace (5).

GO TO FRAME 4

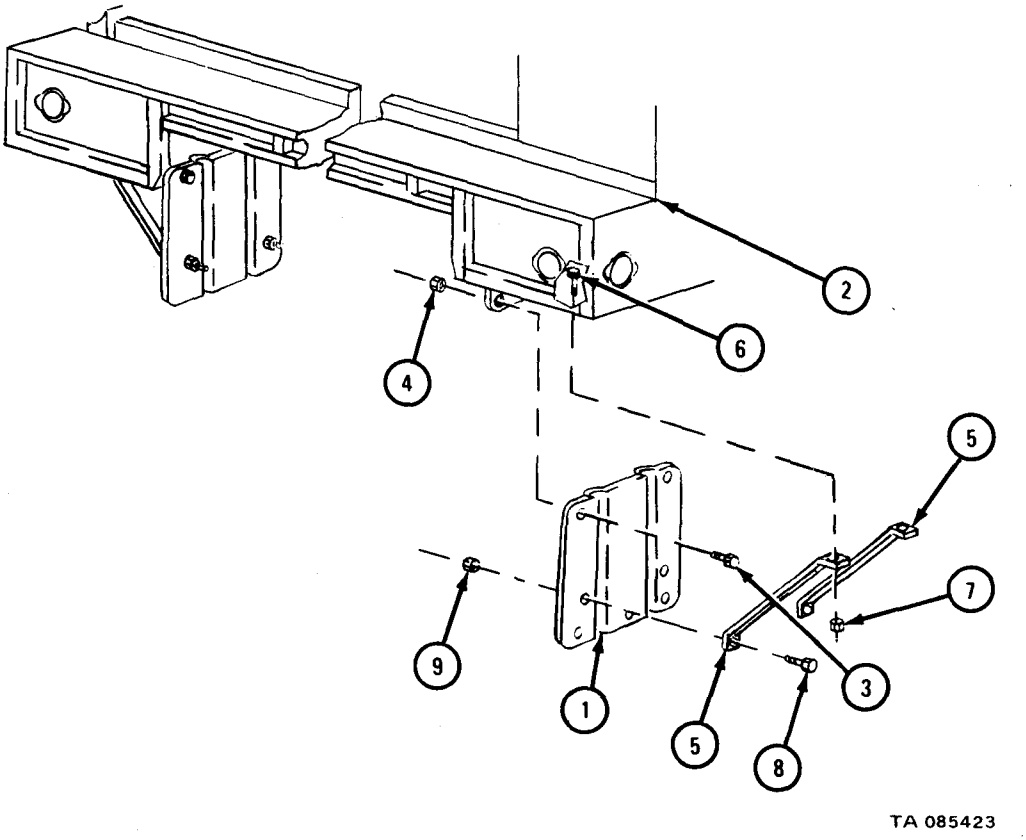

FRAME 4

1. Put rubber splash shield (1) on splash shield (2) and put in three screws (3).
2. Put three nuts (4) on screws (3).
3. Do steps 1 and 2 again for rubber splash shield (1) on other splash shield (2).

END OF TASK

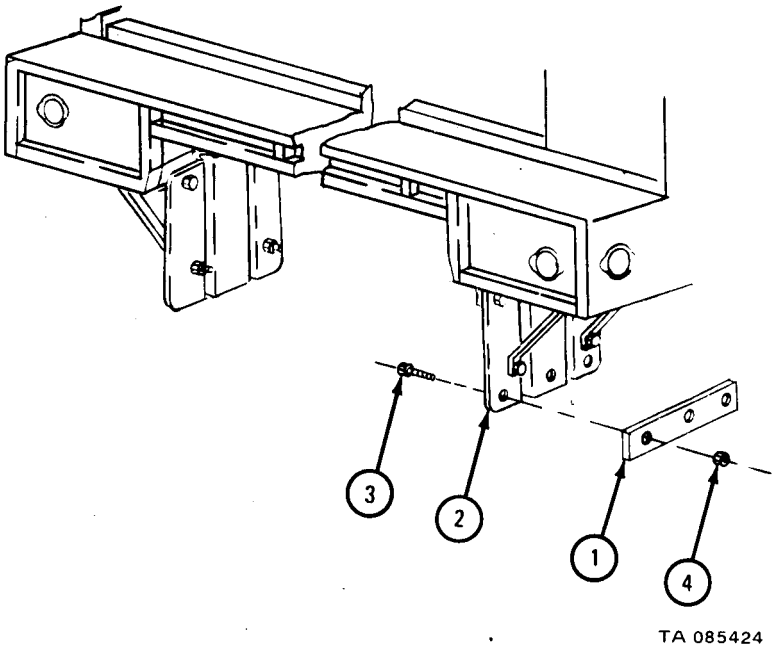

By Order of the Secretaries of the Army and the Air Force:

E. C. MEYER
General, United States Army
Chief of Staff

Official:

J. C. PENNINGTON
Major General, United States Army
The Adjutant General

LEW ALLEN, JR., General, USAF
Chief of Staff

Official:

VAN L. CRAWFORD, JR., Colonel, USAF
Director of Administration

Distribution:

To be distributed in accordance with DA Form 12-38, Direct and General Support Maintenance requirements for 2-1/2 Ton Truck Cargo, 2-1/2 Ton Truck Van, etc.

☆ U.S. GOVERNMENT PRINTING OFFICE: 1981

RECOMMENDED CHANGES TO EQUIPMENT TECHNICAL PUBLICATIONS

SOMETHING WRONG WITH THIS PUBLICATION?

FROM: (PRINT YOUR UNIT'S COMPLETE ADDRESS)
CDR, 1st Bn, 65th ADA
Attn: SP4 Jane Idone
Key West, FL 33040

DATE SENT: Date sent in

PUBLICATION NUMBER	PUBLICATION DATE	PUBLICATION TITLE
TM 9-2320-209-34-2-2	20 May 1981	DIR. & GEN. SUPPORT MAINT. MANUAL

BE EXACT. PIN-POINT WHERE IT IS

PAGE NO	PARA-GRAPH	FIGURE NO	TABLE NO	IN THIS SPACE TELL WHAT IS WRONG AND WHAT SHOULD BE DONE ABOUT IT:
17-13	17-4 h			FRAME 1, step 2 reads "Put in screws (2)." Should read "Put in eight screws (2) and hold them in place."
17-38	17-5 f			FRAME 6, change illustration callouts. Reason: callouts for knob (6) and hinge (5) are reversed.
17-67	17-6			Subparagraph e, first step refers to FM 43-3. Should refer to FM 43-2.

SAMPLE

PRINTED NAME, GRADE OR TITLE, AND TELEPHONE NUMBER: SP4 Jane Idone Autovon 222-2224

SIGN HERE: Jane Idone

DA FORM 1 JUL 79 2028-2

PREVIOUS EDITIONS ARE OBSOLETE.

P.S.--IF YOUR OUTFIT WANTS TO KNOW ABOUT YOUR RECOMMENDATION MAKE A CARBON COPY OF THIS AND GIVE IT TO YOUR HEADQUARTERS.

REVERSE OF DA FORM 2028-2

FILL IN YOUR UNIT'S ADDRESS

FOL

DEPARTMENT OF THE ARMY

OFFICIAL BUSINESS
PENALTY FOR PRIVATE USE $_

SAMPLE

POSTAGE AND FEES PAID
DEPARTMENT OF THE ARMY
DOD 314

U.S. MAIL

TEAR ALONG PERFORATED LINE

Commander
U.S. Army Tank-Automotive Command
ATTN: DRSTA-MB
Warren, MI 48090

RECOMMENDED CHANGES TO EQUIPMENT TECHNICAL PUBLICATIONS

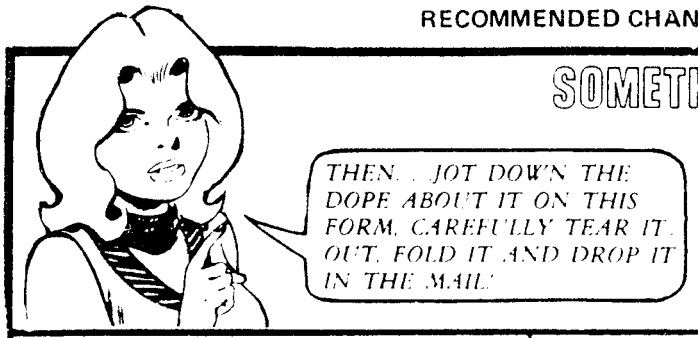

SOMETHING WRONG WITH THIS PUBLICATION?

FROM (PRINT YOUR UNIT'S COMPLETE ADDRESS)

DATE SENT

PUBLICATION NUMBER	PUBLICATION DATE	PUBLICATION TITLE
TM 9-2320-209-34-2-2	20 May 1981	DIR. & GEN. SUPPORT MAINT. MANUAL

BE EXACT PIN-POINT WHERE IT IS

PAGE NO	PARA-GRAPH	FIGURE NO	TABLE NO

IN THIS SPACE TELL WHAT IS WRONG AND WHAT SHOULD BE DONE ABOUT IT:

PRINTED NAME GRADE OR TITLE AND TELEPHONE NUMBER

SIGN HERE

DA FORM 1 JUL 79 2028-2

PREVIOUS EDITIONS ARE OBSOLETE.

P.S.--IF YOUR OUTFIT WANTS TO KNOW ABOUT YOUR RECOMMENDATION MAKE A CARBON COPY OF THIS AND GIVE IT TO YOUR HEADQUARTERS

REVERSE OF DA FORM 2028-2

FILL IN YOUR UNIT'S ADDRESS

FOLD BACK

DEPARTMENT OF THE ARMY

OFFICIAL BUSINESS
PENALTY FOR PRIVATE USE $300

POSTAGE AND FEES PAID
DEPARTMENT OF THE ARMY
DOD 314

U.S. MAIL

TEAR ALONG PERFORATED LINE

COMMANDER
U.S. ARMY TANK – AUTOMOTIVE
MATERIEL READINESS COMMAND
ATTN: DRSTA-MB
WARREN, MI 48090

RECOMMENDED CHANGES TO EQUIPMENT TECHNICAL PUBLICATIONS

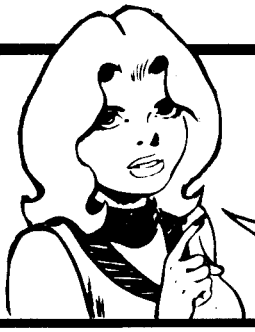

THEN. . . JOT DOWN THE DOPE ABOUT IT ON THIS FORM, CAREFULLY TEAR IT OUT, FOLD IT AND DROP IT IN THE MAIL!

SOMETHING WRONG WITH THIS PUBLICATION?

FROM (PRINT YOUR UNIT'S COMPLETE ADDRESS)

DATE SENT

PUBLICATION NUMBER	PUBLICATION DATE	PUBLICATION TITLE
TM 9-2320-209-34-2-2	20 May 1981	DIR. & GEN. SUPPORT MAINT. MANUAL

BE EXACT. . .PIN-POINT WHERE IT IS

PAGE NO	PARA-GRAPH	FIGURE NO	TABLE NO

IN THIS SPACE TELL WHAT IS WRONG AND WHAT SHOULD BE DONE ABOUT IT:

PRINTED NAME GRADE OR TITLE AND TELEPHONE NUMBER

SIGN HERE

DA FORM 1 JUL 79 2028-2

PREVIOUS EDITIONS ARE OBSOLETE.

P.S.--IF YOUR OUTFIT WANTS TO KNOW ABOUT YOUR RECOMMENDATION MAKE A CARBON COPY OF THIS AND GIVE IT TO YOUR HEADQUARTERS

REVERSE OF DA FORM 2028-2

FILL IN YOUR UNIT'S ADDRESS

FOLD BACK

DEPARTMENT OF THE ARMY

OFFICIAL BUSINESS
PENALTY FOR PRIVATE USE $300

POSTAGE AND FEES PAID
DEPARTMENT OF THE ARMY
DOD 314

U.S. MAIL

TEAR ALONG PERFORATED LINE

Commander
U.S. Army Tank-Automotive Command
ATTN: DRSTA-MB
Warren, MI 48090

RECOMMENDED CHANGES TO EQUIPMENT TECHNICAL PUBLICATIONS

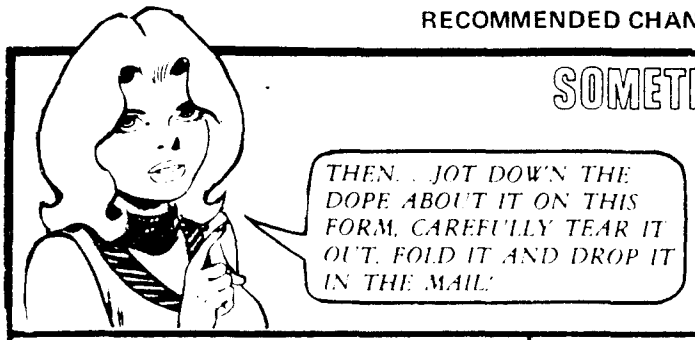

SOMETHING WRONG WITH THIS PUBLICATION?

FROM (PRINT YOUR UNIT'S COMPLETE ADDRESS)

DATE SENT

PUBLICATION NUMBER	PUBLICATION DATE	PUBLICATION TITLE
TM 9-2320-209-34-2-2	20 May 1981	DIR. & GEN. SUPPORT MAINT. MANUAL

BE EXACT PIN-POINT WHERE IT IS

PAGE NO	PARA-GRAPH	FIGURE NO	TABLE NO

IN THIS SPACE TELL WHAT IS WRONG AND WHAT SHOULD BE DONE ABOUT IT:

PRINTED NAME GRADE OR TITLE AND TELEPHONE NUMBER

SIGN HERE

DA FORM 1 JUL 79 2028-2

PREVIOUS EDITIONS ARE OBSOLETE.

P.S.—IF YOUR OUTFIT WANTS TO KNOW ABOUT YOUR RECOMMENDATION, MAKE A CARBON COPY OF THIS AND GIVE IT TO YOUR HEADQUARTERS

REVERSE OF DA FORM 2028-2

FILL IN YOUR UNIT'S ADDRESS

FOLD BACK

DEPARTMENT OF THE ARMY

OFFICIAL BUSINESS
PENALTY FOR PRIVATE USE $300

POSTAGE AND FEES PAID
DEPARTMENT OF THE ARMY
DOD 314

U.S. MAIL

TEAR ALONG PERFORATED LINE

COMMANDER
U.S. ARMY TANK – AUTOMOTIVE
MATERIEL READINESS COMMAND
ATTN: DRSTA-MB
WARREN, MI 48090

THE METRIC SYSTEM AND EQUIVALENTS

LINEAR MEASURE

1 Centimeter = 10 Millimeters = 0.01 Meters = 0.3937 Inches
1 Meter = 100 Centimeters = 1000 Millimeters = 39.37 Inches
1 Kilometer = 1000 Meters = 0.621 Miles

WEIGHTS

1 Gram = 0.001 Kilograms = 1000 Milligrams = 0.035 Ounces
1 Kilogram = 1000 Grams = 2.2 Lb
1 Metric Ton = 1000 Kilograms = 1 Megagram = 1.1 Short Tons

LIQUID MEASURE

1 Milliliter = 0.001 Liters = 0.0338 Fluid Ounces
1 Liter = 1000 Milliliters = 33.82 Fluid Ounces

SQUARE MEASURE

1 Sq Centimeter = 100 Sq Millimeters = 0.155 Sq Inches
1 Sq Meter = 10,000 Sq Centimeters = 10.76 Sq Feet
1 Sq Kilometer = 1,000,000 Sq Meters = 0.386 Sq Miles

CUBIC MEASURE

1 Cu Centimeter = 1000 Cu Millimeters = 0.06 Cu Inches
1 Cu Meter = 1,000,000 Cu Centimeters = 35.31 Cu Feet

TEMPERATURE

$5/9\ (^0F - 32) = {}^0C$
212^0 Fahrenheit is equivalent to 100^0 Celsius
90^0 Fahrenheit is equivalent to 32.2^0 Celsius
32^0 Fahrenheit is equivalent to 0^0 Celsius
$9/5\ C^0 + 32 = F^0$

APPROXIMATE CONVERSION FACTORS

TO CHANGE	TO	MULTIPLY BY
Inches	Centimeters	2.540
Feet	Meters	0.305
Yards	Meters	0.914
Miles	Kilometers	1.609
Square Inches	Square Centimeters	6.451
Square Feet	Square Meters	0.093
Square Yards	Square Meters	0.836
Square Miles	Square Kilometers	2.590
Acres	Square Hectometers	0.405
Cubic Feet	Cubic Meters	0.028
Cubic Yards	Cubic Meters	0.765
Fluid Ounces	Milliliters	29.573
Pints	Liters	0.473
Quarts	Liters	0.946
Gallons	Liters	3.785
Ounces	Grams	28.349
Pounds	Kilograms	0.454
Short Tons	Metric Tons	0.907
Pound-Feet	Newton-Meters	1.356
Pounds per Square Inch	Kilopascals	6.895
Miles per Gallon	Kilometers per Liter	0.425
Miles per Hour	Kilometers per Hour	1.609

TO CHANGE	TO	MULTIPLY BY
Centimeters	Inches	0.394
Meters	Feet	3.280
Meters	Yards	1.094
Kilometers	Miles	0.621
Square Centimeters	Square Inches	0.155
Square Meters	Square Feet	10.764
Square Meters	Square Yards	1.196
Square Kilometers	Square Miles	0.386
Square Hectometers	Acres	2.471
Cubic Meters	Cubic Feet	35.315
Cubic Meters	Cubic Yards	1.308
Milliliters	Fluid Ounces	0.034
Liters	Pints	2.113
Liters	Quarts	1.057
Liters	Gallons	0.264
Grams	Ounces	0.035
Kilograms	Pounds	2.205
Metric Tons	Short Tons	1.102
Newton-Meters	Pound-Feet	0.738
Kilopascals	Pounds per Square Inch	0.145
Kilometers per Liter	Miles per Gallon	2.354
Kilometers per Hour	**Miles per Hour**	**0.621**

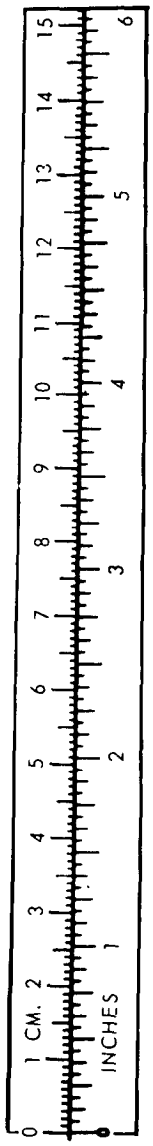

TA089991